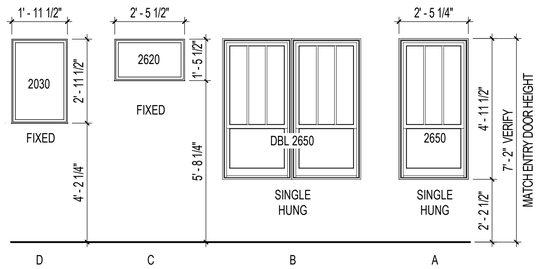

VISUAL WINDOW TYPES
3/8" = 1'-0"

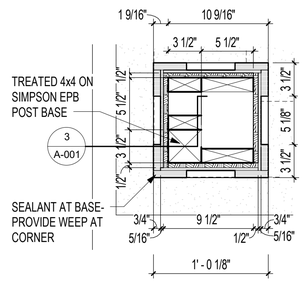

4 COLUMN PLAN DETAIL
1 1/2" = 1'-0" 1 / A-2A

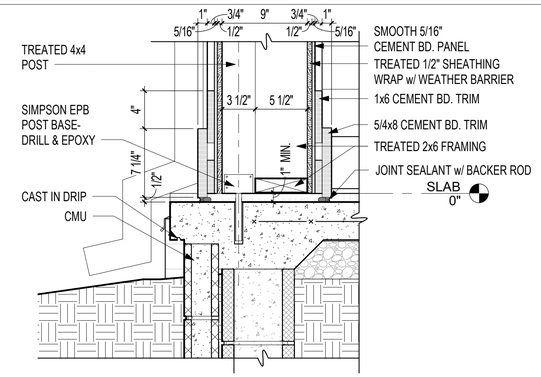

3 COLUMN BASE DETAIL
1 1/2" = 1'-0" 4 / A-001

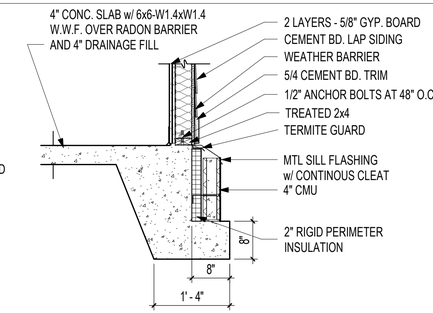

2 TURNDOWN SLAB
3/4" = 1'-0" /

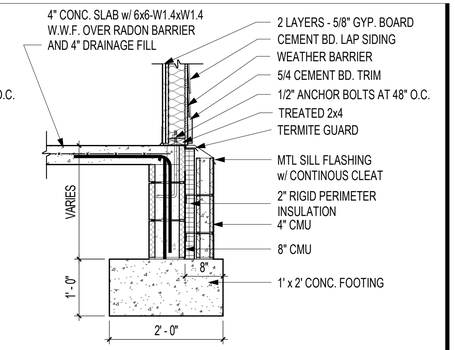

1 FOUNDATION WALL & FOOTING
3/4" = 1'-0" /

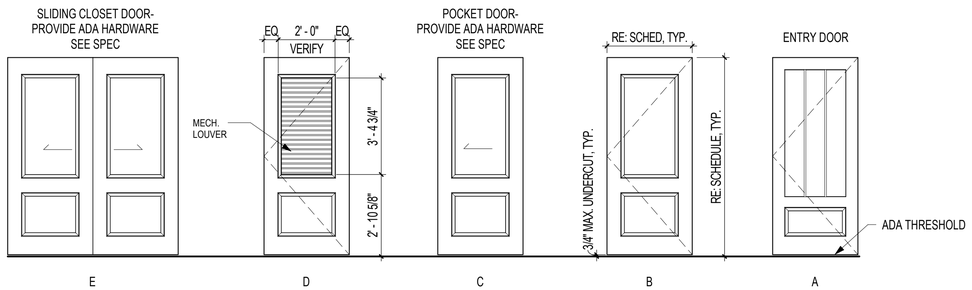

VISUAL DOOR TYPES
3/8" = 1'-0"

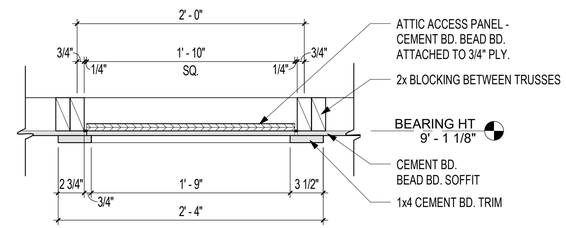

10 ATTIC ACCESS DETAIL
1 1/2" = 1'-0" 2 / A-2A

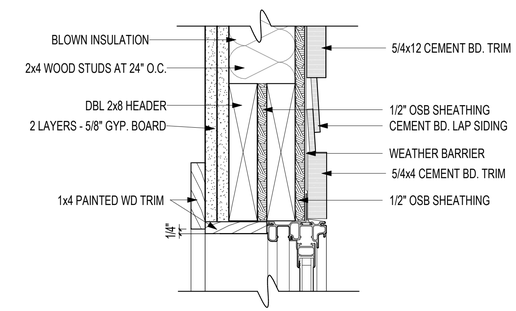

5 WINDOW HEAD DETAIL
3" = 1'-0" /

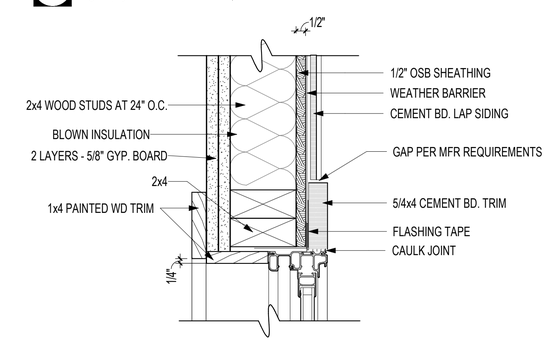

6 WINDOW JAMB DETAIL
3" = 1'-0" /

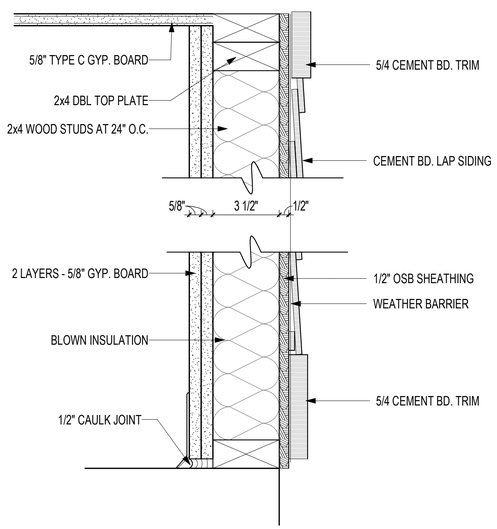

ACOUSTICAL TREATMENT BETWEEN INTERIOR GWB. PER MANUFACTURERS INSTALLATION INSTRUCTIONS BASIS OF DESIGN : GREEN GLUE COMPOUND & ADHESIVE

11 EXTERIOR WALL DETAIL
3" = 1'-0" /

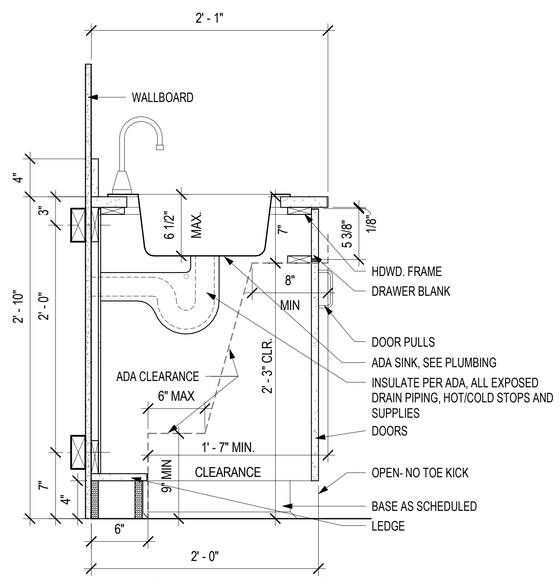

9 ADA SINK SECTION/ WORKSPACE (SIM.)
1 1/2" = 1'-0" 2 / A-4A

NOT USED

8 NOT USED
3/4" = 1'-0" /

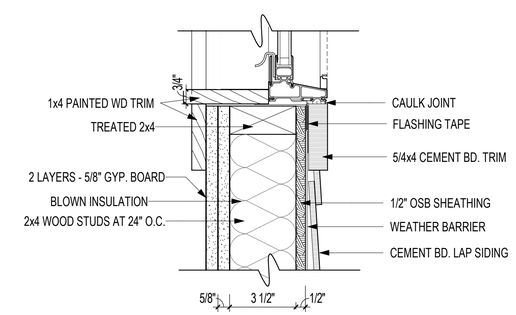

7 WINDOW SILL DETAIL
3" = 1'-0" /

VETERANS' VILLAGE
CITY OF JONESBORO

AGGIE ROAD, JONESBORO, ARKANSAS

OWNER PROJECT # : 2020 : 12

REGARDING THE SENSITIVE ISSUES OF CONFIDENTIALITY AND COPYRIGHT, ANY REQUEST FOR THE RELEASE, OR REPRODUCTION OF THESE DRAWINGS MUST BE APPROVED BY COOPER MIXON ARCHITECTS PLLC

COOPER MIXON ARCHITECTS PLLC
LL237
REGISTERED ARCHITECTS
ARKANSAS
2020-03-06

COOPER MIXON architects
505 union street, 2nd flr
phone:870.336.0535
pressdors ar 72901
www.coopermixon.com

PERMIT SET

PROJECT NO.
1805

PROJECT NAME
VETERANS' VILLAGE

DATE
2020-03-06

CONTENTS
COMMON DETAILS

SHEET NUMBER
A-001

3/12/2020 11:02:52 AM

REAR GABLE TRUSS

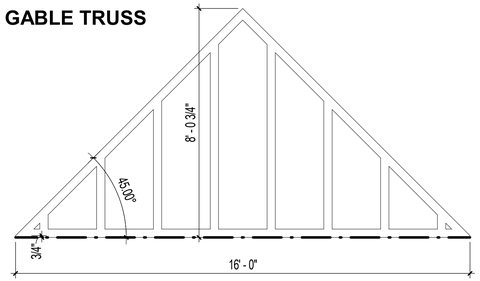

TYPICAL TRUSS

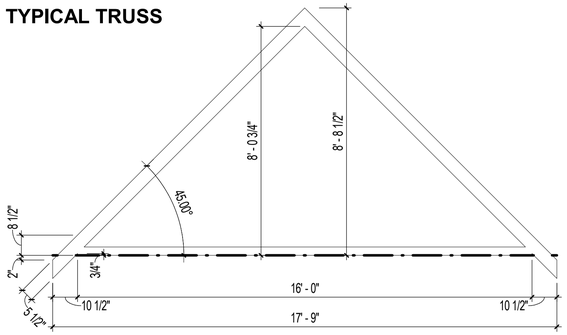

PARTIAL GABLE TRUSS

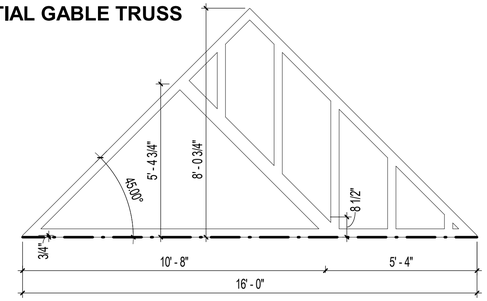

FNT PORCH TRUSS

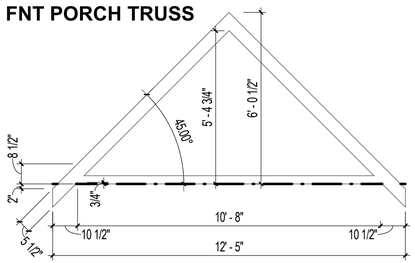

FNT GABLE TRUSS

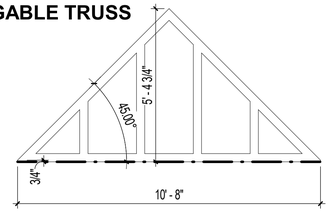

TRUSS LEGEND

3/8" = 1'-0"

SCALE : 3/8" = 1'-0"

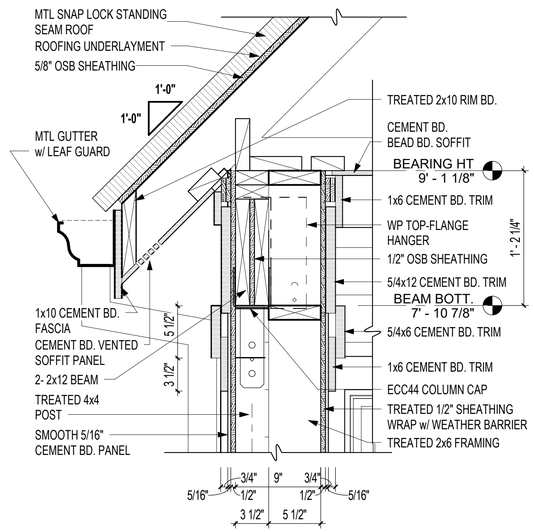

3 UPPER COLUMN DETAIL

1 1/2" = 1'-0" 1 / A-5A

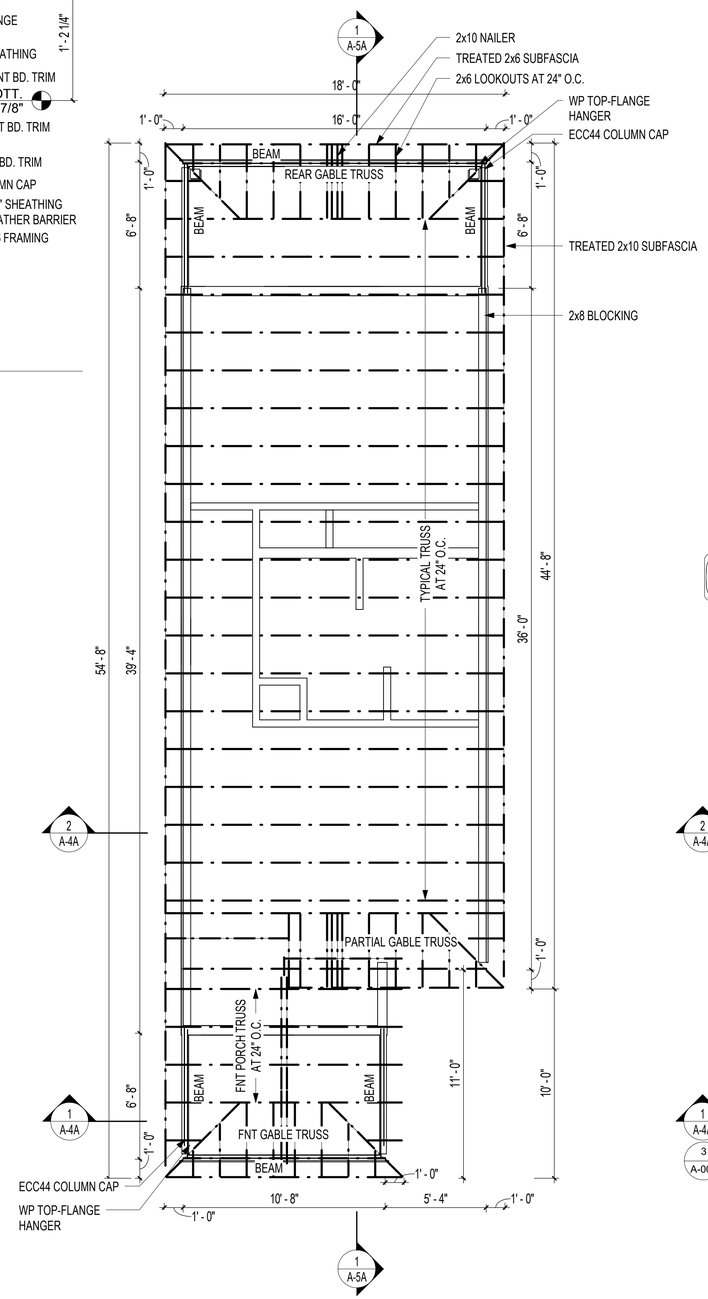

2 ROOF FRAMING PLAN

1/4" = 1'-0" 3 / A-001

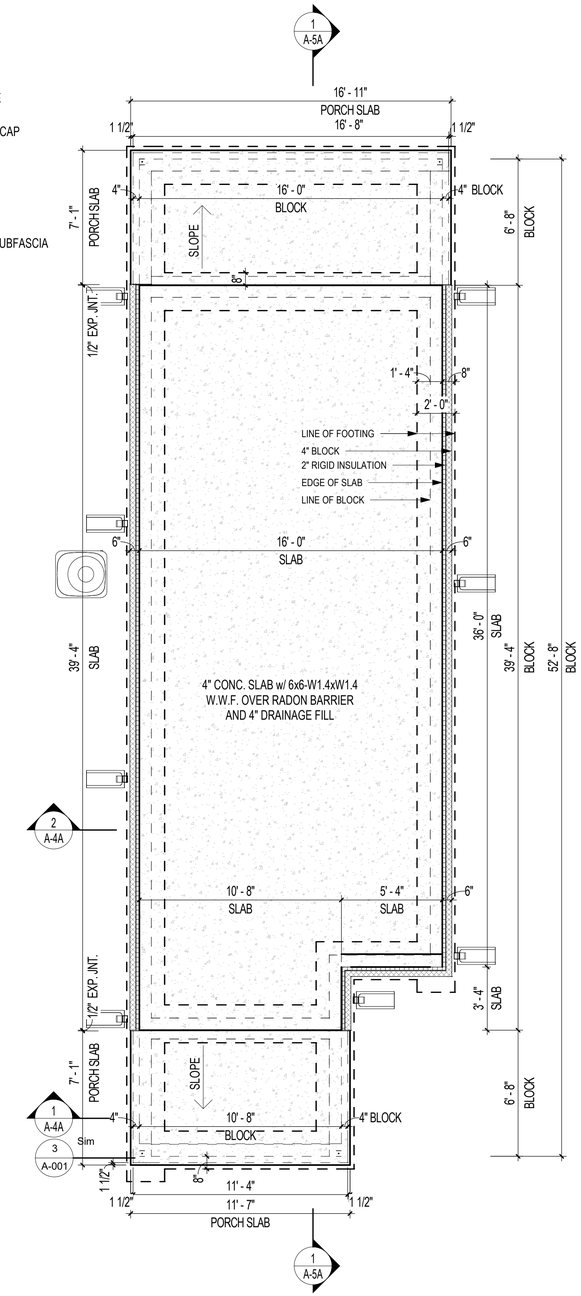

1 FOUNDATION PLAN

1/4" = 1'-0" 3 / A-001

SCALE : 1/4" = 1'-0"

VETERANS' VILLAGE - 1 BED
CITY OF JONESBORO

AGGIE ROAD, JONESBORO, ARKANSAS

OWNER PROJECT # : 2020 : 12

REGARDING THE SENSITIVE ISSUES OF CONFIDENTIALITY AND COPYRIGHT, ANY REQUEST FOR THE RELEASE, OR REPRODUCTION OF THESE DRAWINGS MUST BE APPROVED BY COOPER MIXON ARCHITECTS PLLC

COOPER MIXON ARCHITECTS PLLC
LL237
REGISTERED ARCHITECTS
ARKANSAS
2020-03-06

COOPER MIXON architects
506 union street, 2nd flr
jonesboro, ar 72401
phone 870.336.5536
www.coopermixon.com

PERMIT SET

PROJECT NO.
1805

PROJECT NAME
VETERANS' VILLAGE

DATE
2020-03-06

CONTENTS
FOUNDATION PLAN, ROOF FRAMING PLAN

SHEET NUMBER
A-1A

3/12/2020 11:02:53 AM

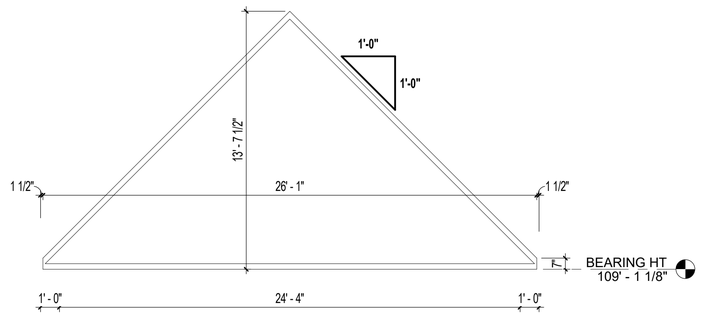

MAIN TRUSS PROFILE
1/4" = 1'-0"

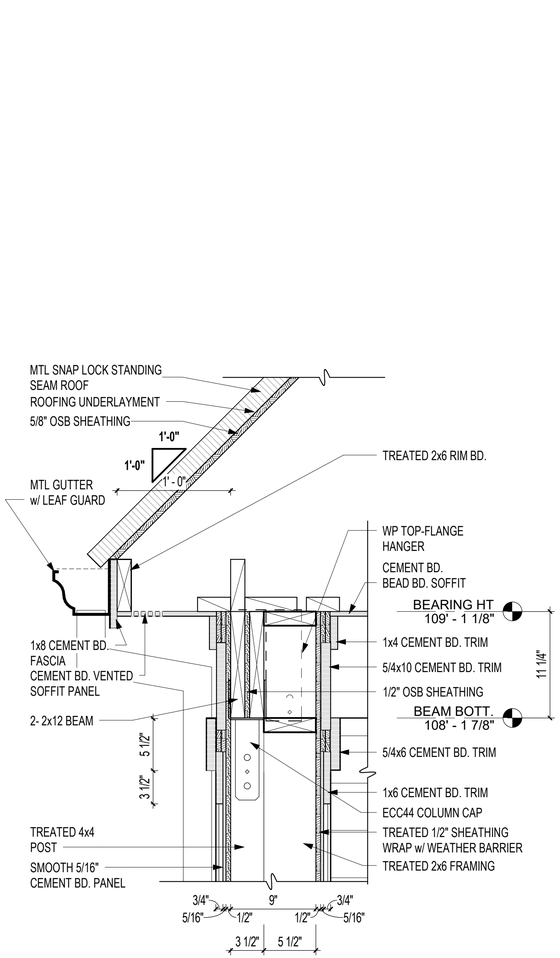

3 UPPER COLUMN DETAIL
1 1/2" = 1'-0" 2 / A-3B

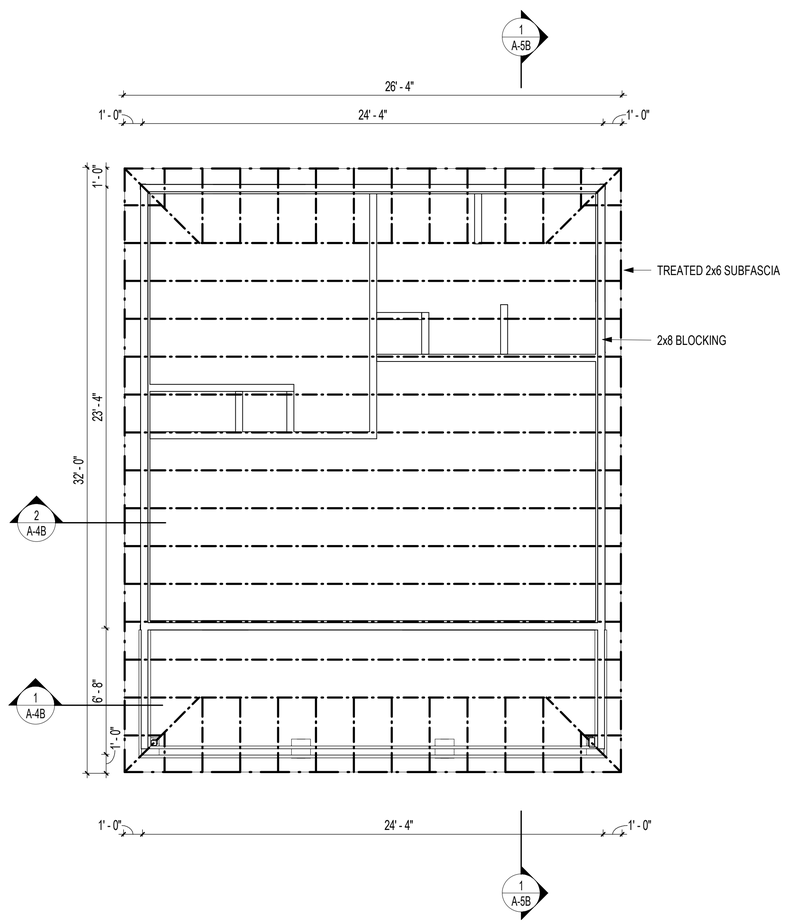

2 ROOF FRAMING PLAN
1/4" = 1'-0" 3 / A-001

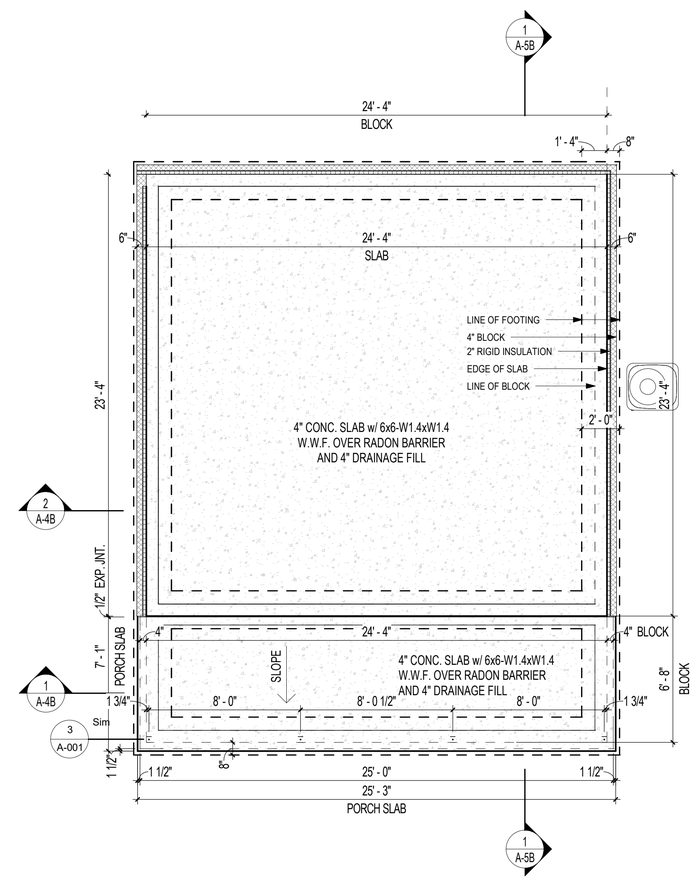

1 FOUNDATION PLAN
1/4" = 1'-0" 3 / A-001

0 2 4 8
SCALE : 1/4" = 1'-0"

VETERANS' VILLAGE - COTTAGE
CITY OF JONESBORO

AGGIE ROAD, JONESBORO, ARKANSAS

OWNER PROJECT # : 2020 : 12

REGARDING THE SENSITIVE ISSUES OF CONFIDENTIALITY AND COPYRIGHT, ANY REQUEST FOR THE RELEASE, OR REPRODUCTION OF THESE DRAWINGS MUST BE APPROVED BY COOPER MIXON ARCHITECTS PLLC

COOPER MIXON ARCHITECTS
LL237
REGISTERED ARCHITECTS
ARKANSAS
2020-03-06

COOPER MIXON architects
505 union street, 2nd flr
jonesboro, ar 72401
phone:870.336.0535
www.coopermixon.com

PERMIT SET

PROJECT NO.
1805

PROJECT NAME
VETERANS' VILLAGE

DATE
2020-03-06

CONTENTS
FOUNDATION PLAN,
ROOF FRAMING PLAN

SHEET NUMBER
A-1B

3/12/2020 10:37:30 AM

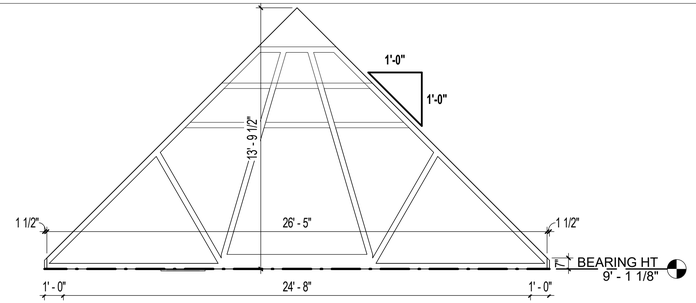

MAIN TRUSS PROFILE

1/4" = 1'-0"

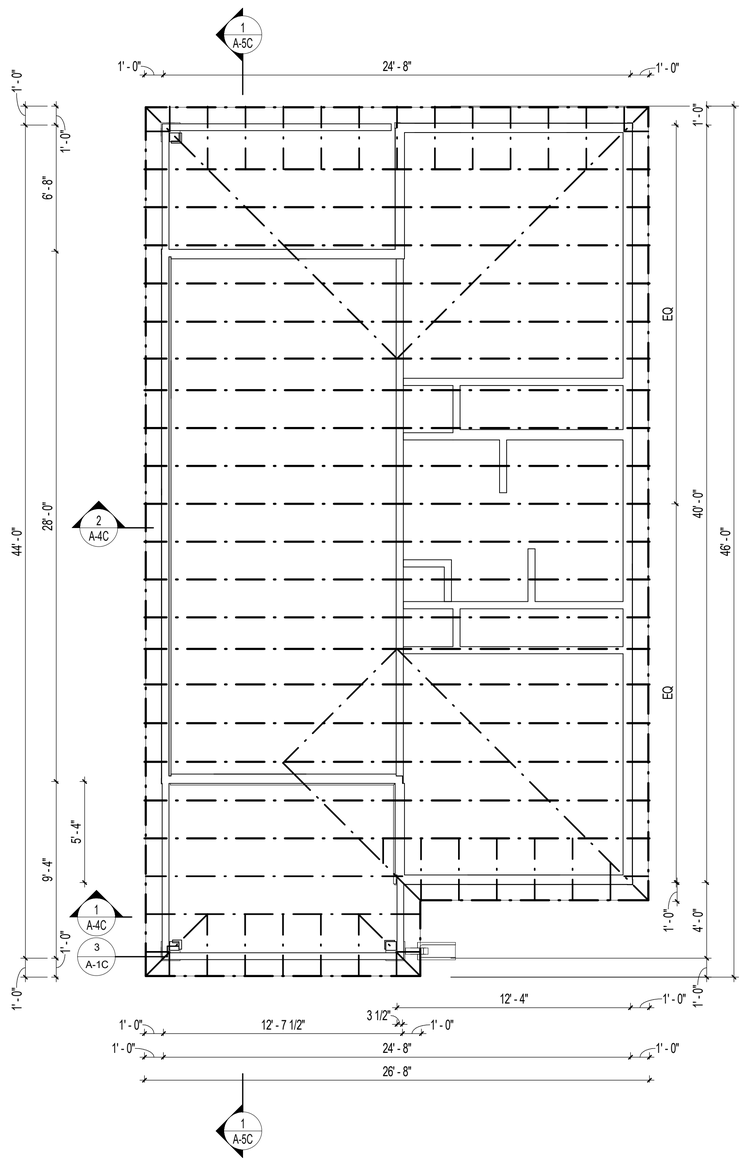

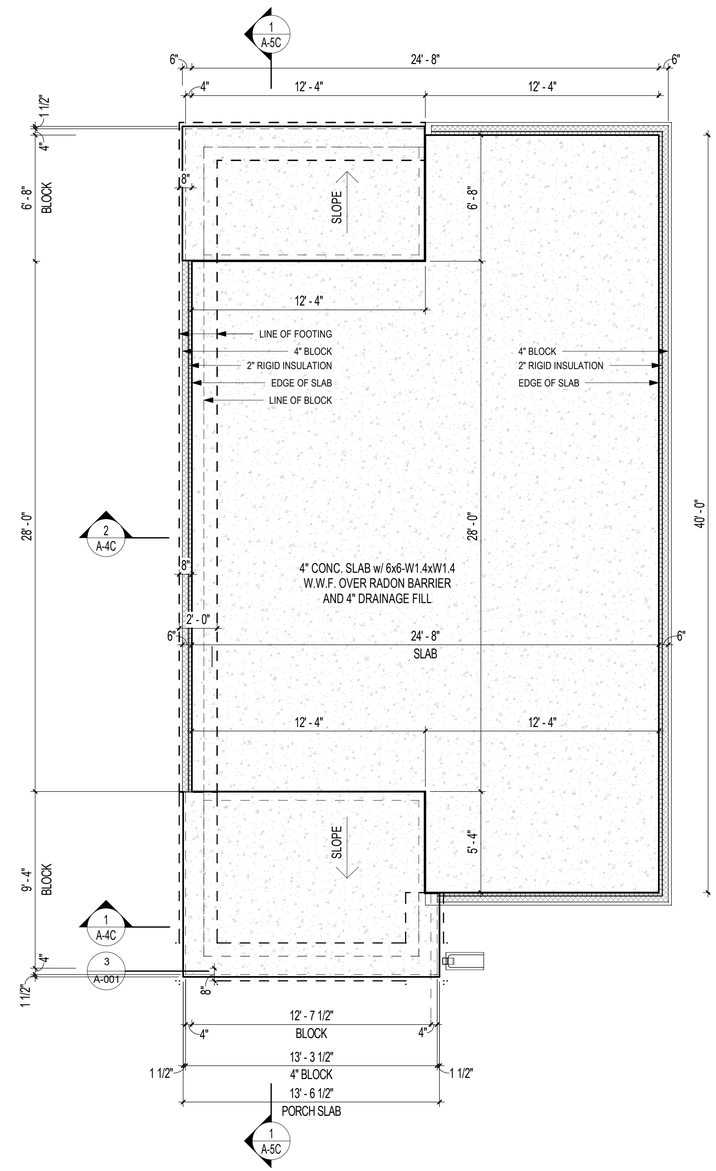

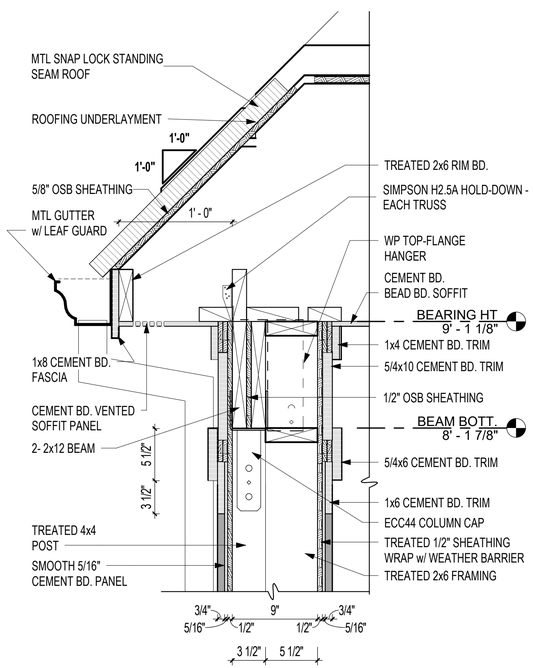

3 UPPER COLUMN DETAIL

1 1/2" = 1'-0" 2 / A-1C

SCALE : 1-1/2" = 1'-0"

2 ROOF FRAMING PLAN

1/4" = 1'-0" 1 / A-3C

1 FOUNDATION PLAN

1/4" = 1'-0" 1 / A-3C

SCALE : 1/4" = 1'-0"

VETERANS' VILLAGE - 2 BED
CITY OF JONESBORO

AGGIE ROAD, JONESBORO, ARKANSAS

OWNER PROJECT # : 2020 : 12

REGARDING THE SENSITIVE ISSUES OF CONFIDENTIALITY AND COPYRIGHT, ANY REQUEST FOR THE RELEASE, OR REPRODUCTION OF THESE DRAWINGS MUST BE APPROVED BY COOPER MIXON ARCHITECTS PLLC

COOPER MIXON ARCHITECTS
LL237
REGISTERED ARCHITECT
ARKANSAS
2020-03-06

COOPER MIXON architects
500 union street, 2nd flr
jonesboro, ar 72401
phone:870.336.0536
www.coopermixon.com

PERMIT SET

PROJECT NO.
1805

PROJECT NAME
VETERANS' VILLAGE

DATE
2020-03-06

CONTENTS
FOUNDATION PLAN,
ROOF FRAMING PLAN

SHEET NUMBER
A-1C

3/12/2020 10:39:09 AM

DOOR SCHEDULE

DOOR TYPE	CONSTRUCTION TYPE	COMMENTS
A	E3070	3'-0" x 7'-0" EXTERIOR CLAD DOOR W/ GLASS
B	1668	1'-4" x 6'-8" INTERIOR DOOR
B	21068	2'-10" x 6'-8" INTERIOR DOOR
C	3068 PCKT	3'-0" x 6'-8" INTERIOR DOOR
D	L3068	3'-0' x 6'-8" LOUVER INTERIOR DOOR
E	SC5068	5'-0" x 6'-8" SLIDING CLOSET DOOR

WINDOW SCHEDULE

TYPE MARK	TYPE	SILL HEIGHT	HEAD HEIGHT	COMMENTS
B	USHG2 2650	2' - 2 1/2"	7' - 2"	2 - 2'-6" x 5'-0" SINGLE HUNG WINDOW
C	2616 FIXED	5' - 8 1/2"	7' - 2"	2'-6" x 1'-6" FIXED FROSTED WINDOW
D	2030 FIXED	4' - 2 1/2"	7' - 2"	2'-0' x 3'-0" FIXED WINDOW

ROOM FINISH SCHEDULE

ROOM NO.	ROOM NAME	FLOOR	BASE	WALLS NORTH	WALLS EAST	WALLS SOUTH	WALLS WEST	CEILING	COMMENTS
01	FRONT PATIO	BROOM FIN. CONC.	-	-	-	-	-	BEADED CEMENT BD.	
02	LIVING / KITCHEN	LVT	4" RUBBER	PAINT	PAINT	PAINT	PAINT	PAINT GYP.	
03	HALL	LVT	4" RUBBER	PAINT	PAINT	PAINT	PAINT	PAINT GYP.	
04	COAT	LVT	4" RUBBER	PAINT	PAINT	PAINT	PAINT	PAINT GYP.	
05	BATHROOM	TILE	TILE	PAINT	PAINT	PAINT	PAINT	PAINT GYP.	
06	BEDROOM	LVT	4" RUBBER	PAINT	PAINT	PAINT	PAINT	PAINT GYP.	
07	CLOSET	LVT	4" RUBBER	PAINT	PAINT	PAINT	PAINT	PAINT GYP.	
08	MECH.	LVT	4" RUBBER	PAINT	PAINT	PAINT	PAINT	PAINT GYP.	
09	BACK PATIO	BROOM FIN. CONC.	-	-	-	-	-	BEADED CEMENT BD.	

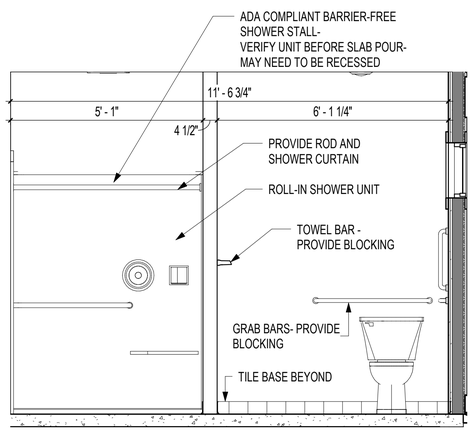

5 BATHROOM ELEVATION
1/2" = 1'-0" 1 / A-2A

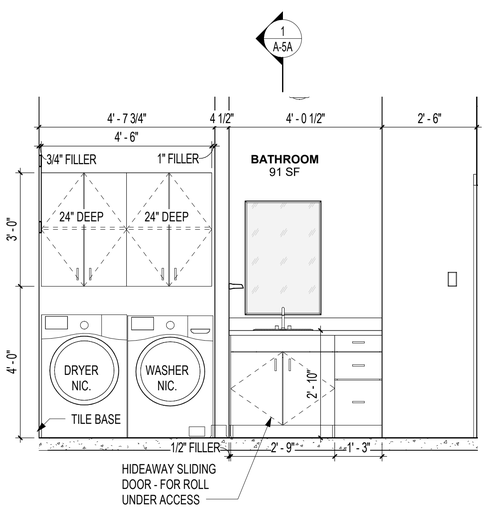

4 BATHROOM ELEVATION
1/2" = 1'-0" 1 / A-2A

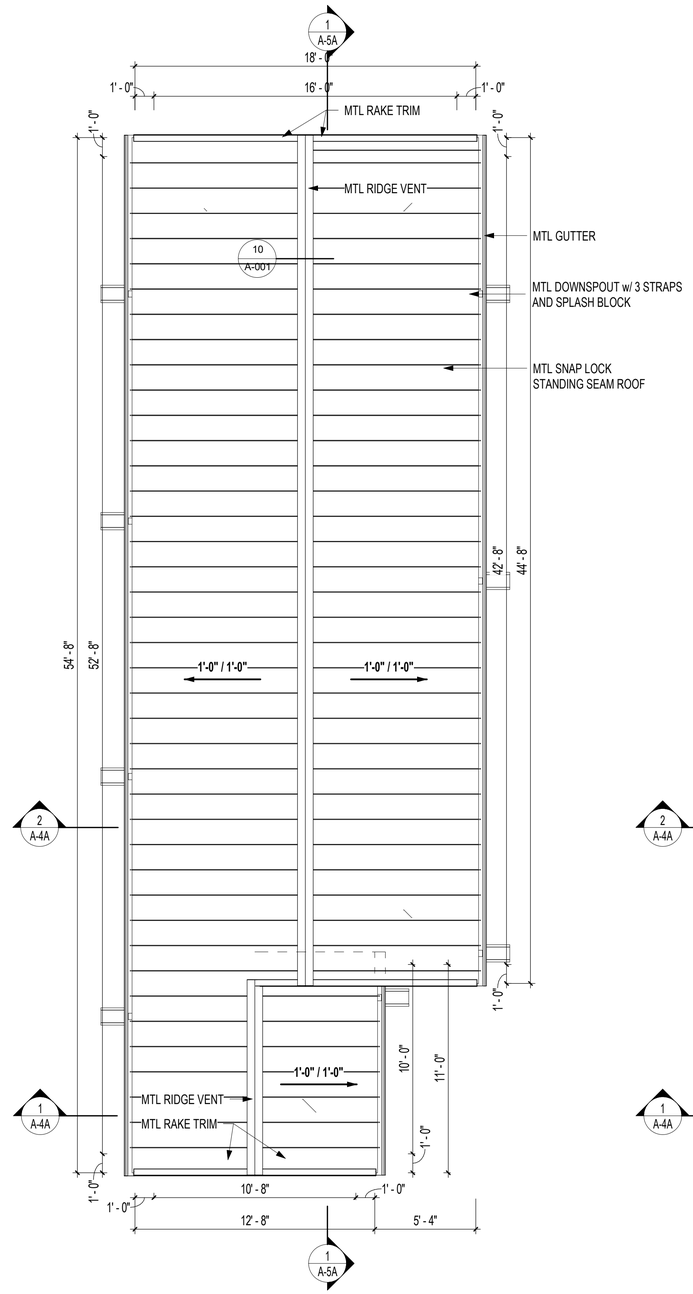

3 ROOF PLAN
1/4" = 1'-0" 3 / A-001

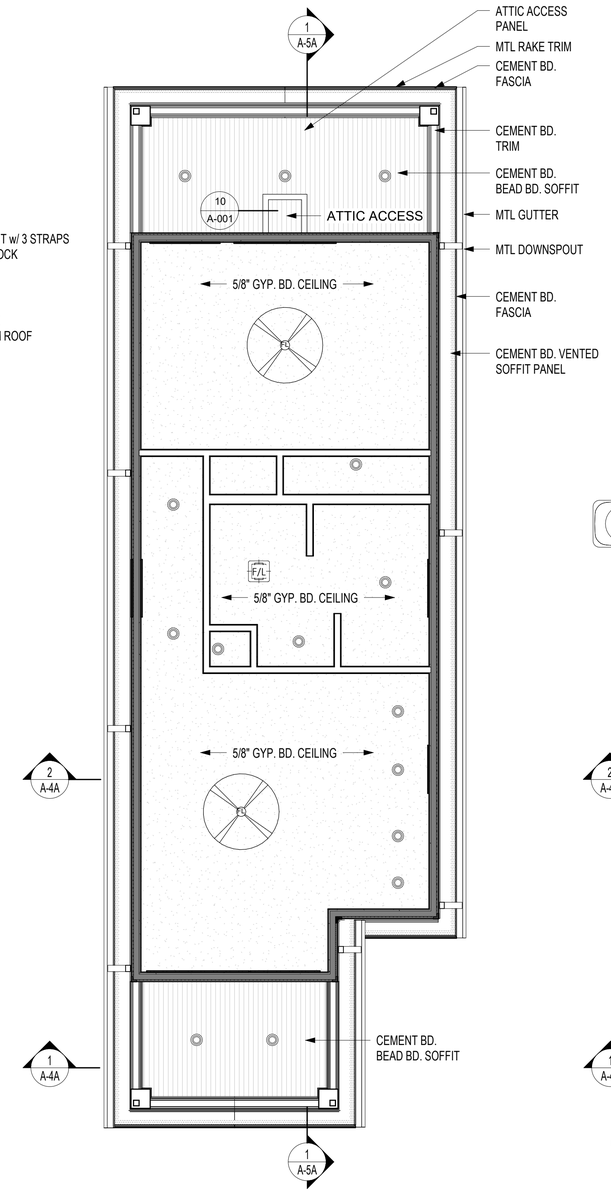

2 REFLECTED CEILING PLAN
1/4" = 1'-0" 3 / A-001

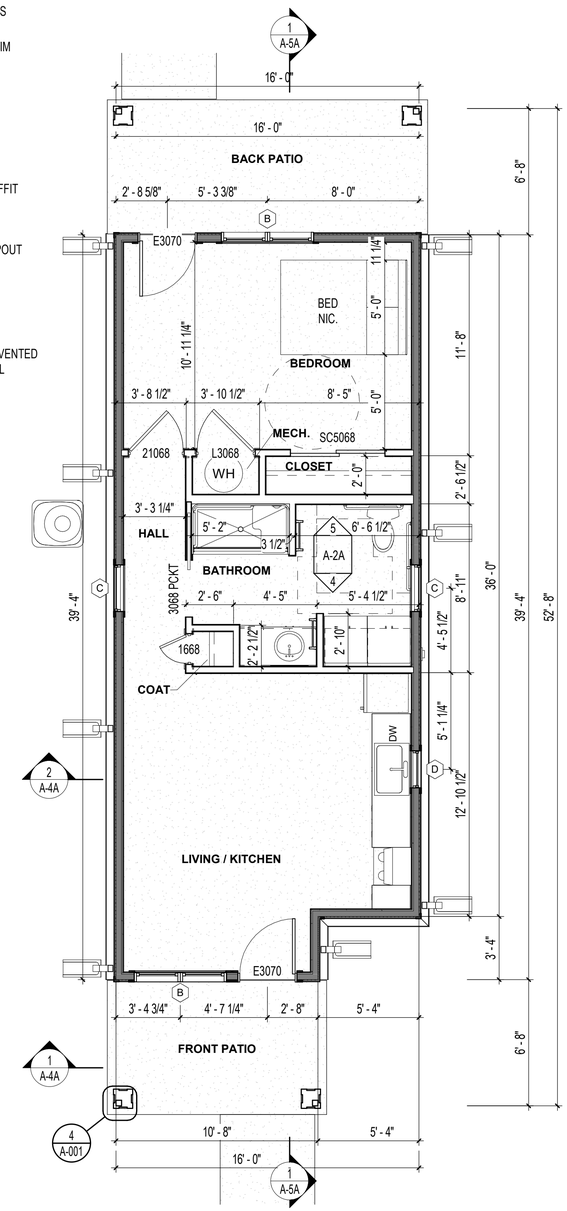

1 FLOOR PLAN
1/4" = 1'-0" 3 / A-001

SCALE : 1/4" = 1'-0"

VETERANS' VILLAGE - 1 BED
CITY OF JONESBORO

AGGIE ROAD, JONESBORO, ARKANSAS

OWNER PROJECT # : 2020 : 12

REGARDING THE SENSITIVE ISSUES OF CONFIDENTIALITY AND COPYRIGHT, ANY REQUEST FOR THE RELEASE, OR REPRODUCTION OF THESE DRAWINGS MUST BE APPROVED BY COOPER MIXON ARCHITECTS PLLC

COOPER MIXON ARCHITECTS PLLC
LL237
REGISTERED ARCHITECTS
ARKANSAS
2020-03-06

COOPER MIXON architects
505 union street, 2nd fl. jonesboro, ar 72401
phone 870.336.0336 www.coopermixon.com

PERMIT SET

PROJECT NO.
1805

PROJECT NAME
VETERANS' VILLAGE

DATE
2020-03-06

CONTENTS
FLOOR PLAN, REFLECTED CEILING PLAN, ROOF PLAN

SHEET NUMBER
A-2A

3/12/2020 11:02:55 AM

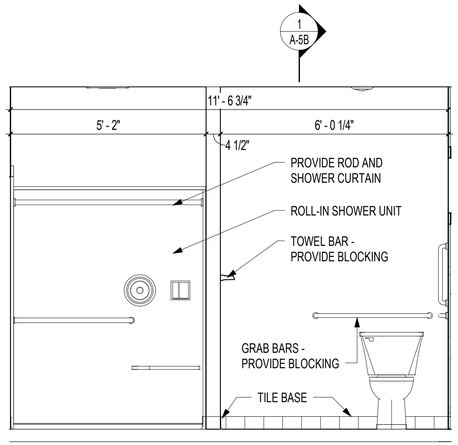

5 BATHROOM ELEVATION
1/2" = 1'-0" 1 / A-2B

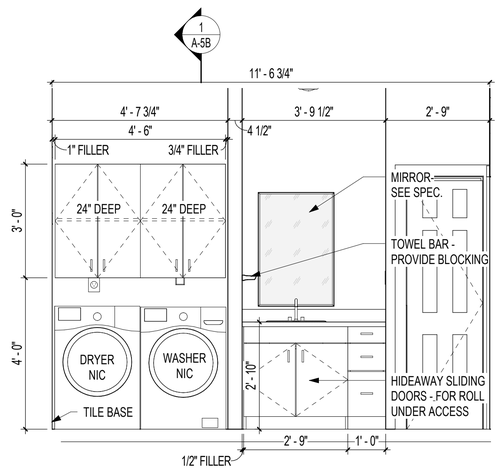

4 BATHROOM ELEVATION
1/2" = 1'-0" 1 / A-2B

0 1 2 4
SCALE : 1/2" = 1'-0"

ROOM FINISH SCHEDULE

ROOM NO.	ROOM NAME	FLOOR	BASE	WALLS NORTH	WALLS EAST	WALLS SOUTH	WALLS WEST	CEILING	COMMENTS
01	FRONT PATIO	BROOM FIN. CONC.	-	-	-	-	-	BEADED CEMENT BD.	
02	LIVING / KITCHEN	LVT	4" RUBBER	PAINT	PAINT	PAINT	PAINT	PAINT GYP.	
03	BEDROOM	LVT	4" RUBBER	PAINT	PAINT	PAINT	PAINT	PAINT GYP.	
04	CLOSET	LVT	4" RUBBER	PAINT	PAINT	PAINT	PAINT	PAINT GYP.	
05	MECH.	LVT	4" RUBBER	PAINT	PAINT	PAINT	PAINT	PAINT GYP.	
06	BATHROOM	TILE	TILE	PAINT	PAINT	PAINT	PAINT	PAINT GYP.	
07	LINEN	TILE	TILE	PAINT	PAINT	PAINT	PAINT	PAINT GYP.	

WINDOW SCHEDULE

TYPE MARK	TYPE	SILL HEIGHT	HEAD HEIGHT	COMMENTS
A	SH 2650	2' - 2 1/2"	7' - 2"	2'-0" x 5'-0" SINGLE HUNG WINDOW
B	USHG2 2650	2' - 2 1/2"	7' - 2"	2 - 2'-0" x 5'-0" SINGLE HUNG WINDOW
C	2616 FIXED	5' - 8 1/2"	7' - 2"	2'-6" x 1'-6" FROSTED FIXED WINDOW
D	2030 FIXED	4' - 2"	7' - 2"	2'-0" x 3'-0" FIXED WINDOW

DOOR SCHEDULE

DOOR TYPE	CONSTRUCTION TYPE	COMMENTS
A	E3070	3'-0" x 7'-0" EXTERIOR CLAD DOOR w/ GLASS
B	2068	2'-0" x 6'-8" INTERIOR DOOR
B	3068	3'-0" x 6'-8" INTERIOR DOOR
C	3068 PCKT	3'-0" x 6'-8" POCKET DOOR
D	L2068	3'-0" x 6'-8" LOUVER INTERIOR DOOR
E	SC4068	4'-0" x 6'-8" SLIDING CLOSET DOOR

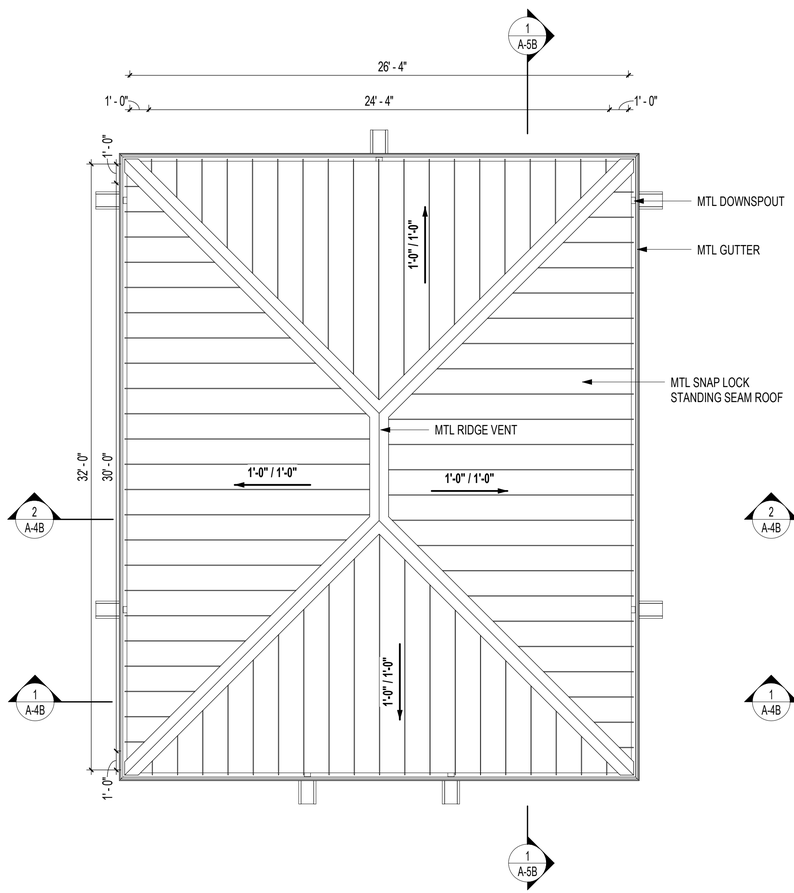

3 ROOF PLAN
1/4" = 1'-0" 3 / A-001

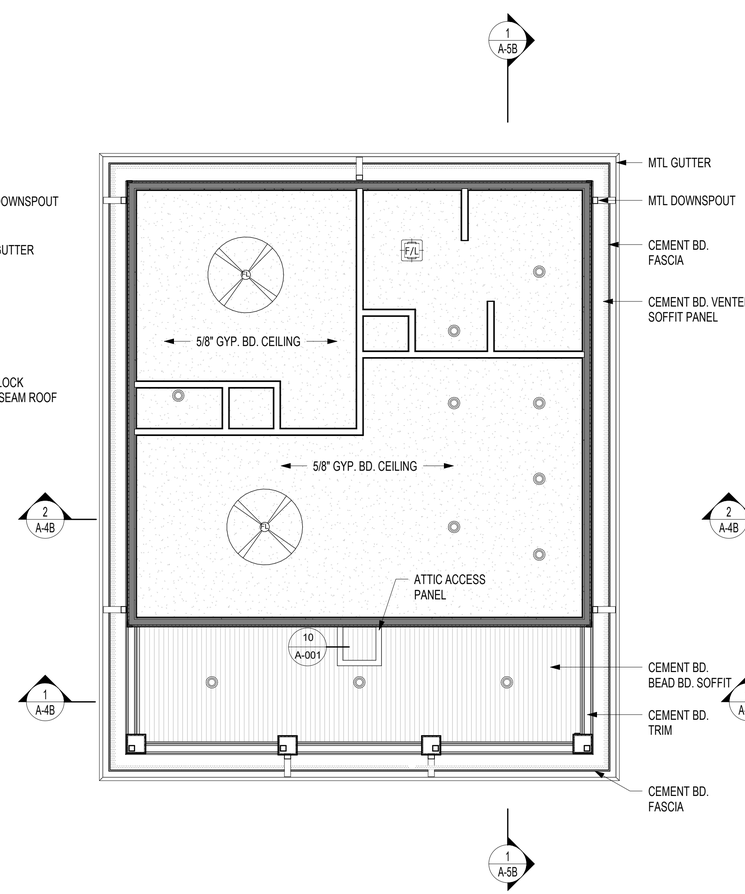

2 REFLECTED CEILING PLAN
1/4" = 1'-0" 3 / A-001

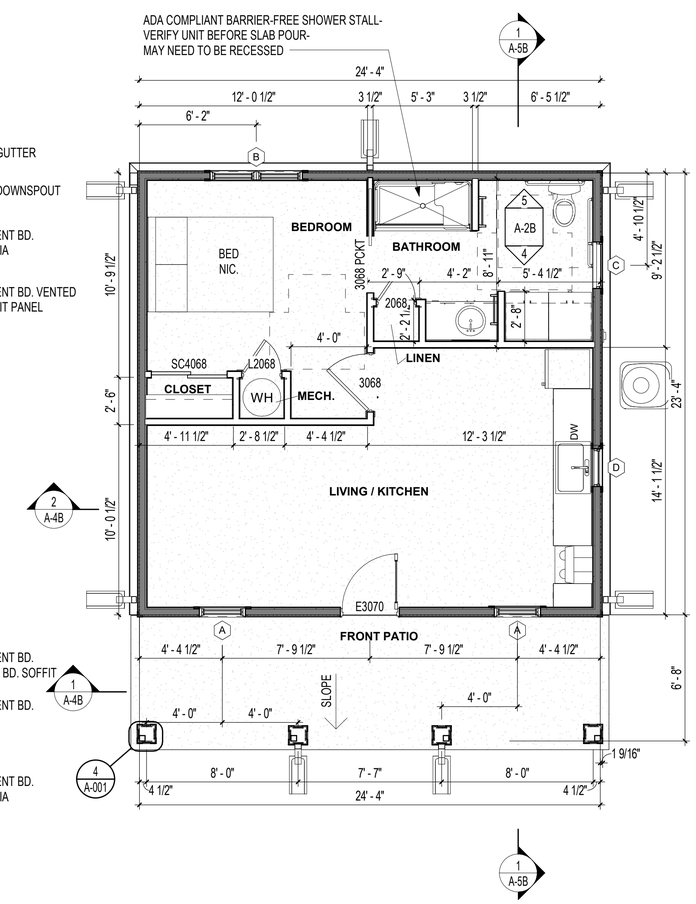

1 FLOOR PLAN
1/4" = 1'-0" 3 / A-001

0 2 4 8
SCALE : 1/4" = 1'-0"

VETERANS' VILLAGE - COTTAGE
CITY OF JONESBORO

AGGIE ROAD, JONESBORO, ARKANSAS

OWNER PROJECT # : 2020 : 12

REGARDING THE SENSITIVE ISSUES OF CONFIDENTIALITY AND COPYRIGHT, ANY REQUEST FOR THE RELEASE, OR REPRODUCTION OF THESE DRAWINGS MUST BE APPROVED BY COOPER MIXON ARCHITECTS PLLC

COOPER MIXON ARCHITECTS PLLC
LL237
REGISTERED ARCHITECTS
ARKANSAS
2020-03-06

COOPER MIXON architects
530 union street, 2nd flr
jonesboro, ar 72401
phone:870.336.0538
www.coopermixon.com

PERMIT SET

PROJECT NO.
1805

PROJECT NAME
VETERANS' VILLAGE

DATE
2020-03-06

CONTENTS
FLOOR PLAN, REFLECTED CEILING PLAN, ROOF PLAN

SHEET NUMBER
A-2B

3/12/2020 10:37:32 AM

WINDOW SCHEDULE

TYPE MARK	TYPE	SILL HEIGHT	HEAD HEIGHT	COMMENTS
A	SH 2650	2' - 2 1/2"	7' - 2"	2'-6" x 5'-0" SINGLE HUNG WINDOW
B	USHG2 2650	2' - 2 1/2"	7' - 2"	2 - 2'-6" x 5'-0" SINGLE HUNG WINDOWS
C	2616 FIXED	5' - 8 1/2"	7' - 2"	2'-6" x 1'-6" FIXED FROSTED WINDOW
D	2030 FIXED	4' - 2"	7' - 2"	2'-0" x 3'-0" FIXED WINDOW

DOOR SCHEDULE

DOOR TYPE	CONSTRUCTION TYPE	COMMENTS
A	E3070	3'-0" x 7'-0" EXTERIOR CLAD DOOR w/ GLASS
B	1668	1'-6" x 6'-8" INTERIOR DOOR
B	3068	3'-0" x 6'-8" INTERIOR DOOR
C	3068 PCKT	3'-0" x 6'-8" INTERIOR POCKET DOOR
D	L2468	2'-4" x 6'-8" LOUVER INTERIOR DOOR
E	SC5668	5'-6" x 6'-8" SLIDING CLOSET DOOR

ROOM FINISH SCHEDULE

ROOM NO.	ROOM NAME	FLOOR	BASE	WALLS NORTH	WALLS EAST	WALLS SOUTH	WALLS WEST	CEILING	COMMENTS
01	FRONT PATIO	BROOM FIN. CONC.						BEADED CEMENT BD.	
02	LIVING / KITCHEN	LVT	4" RUBBER	PAINT	PAINT	PAINT	PAINT	PAINT GYP.	
03	MECH.	LVT	4" RUBBER	PAINT	PAINT	PAINT	PAINT	PAINT GYP.	
04	LAUNDRY	LVT	4" RUBBER	PAINT	PAINT	PAINT	PAINT	PAINT GYP.	
05	HALL	LVT	4" RUBBER	PAINT	PAINT	PAINT	PAINT	PAINT GYP.	
06	BEDROOM 1	LVT	4" RUBBER	PAINT	PAINT	PAINT	PAINT	PAINT GYP.	
07	CLOSET	LVT	4" RUBBER	PAINT	PAINT	PAINT	PAINT	PAINT GYP.	
08	BATHROOM	TILE	TILE	PAINT	PAINT	PAINT	PAINT	PAINT GYP.	
09	LINEN	TILE	TILE	PAINT	PAINT	PAINT	PAINT	PAINT GYP.	
10	BEDROOM 2	LVT	4" RUBBER	PAINT	PAINT	PAINT	PAINT	PAINT GYP.	
11	CLOSET	LVT	4" RUBBER	PAINT	PAINT	PAINT	PAINT	PAINT GYP.	
12	BACK PATIO	BROOM FIN. CONC.						BEADED CEMENT BD.	
13	COAT	LVT	4" RUBBER	PAINT	PAINT	PAINT	PAINT	PAINT GYP.	

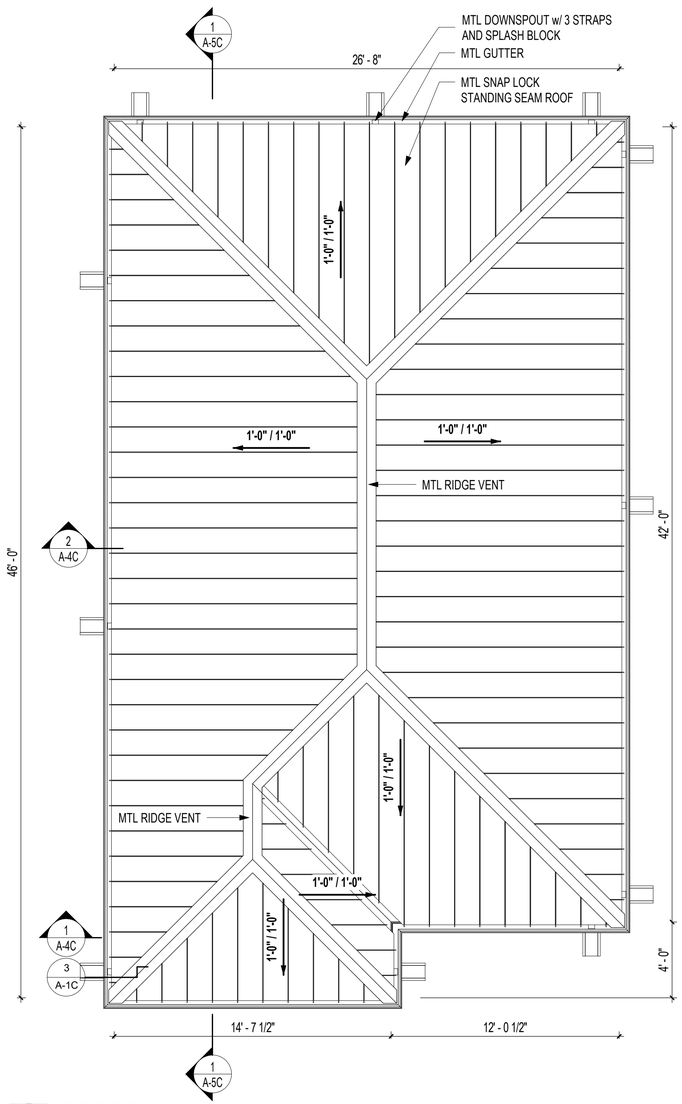

3 ROOF PLAN
1/4" = 1'-0" 1 / A-3C

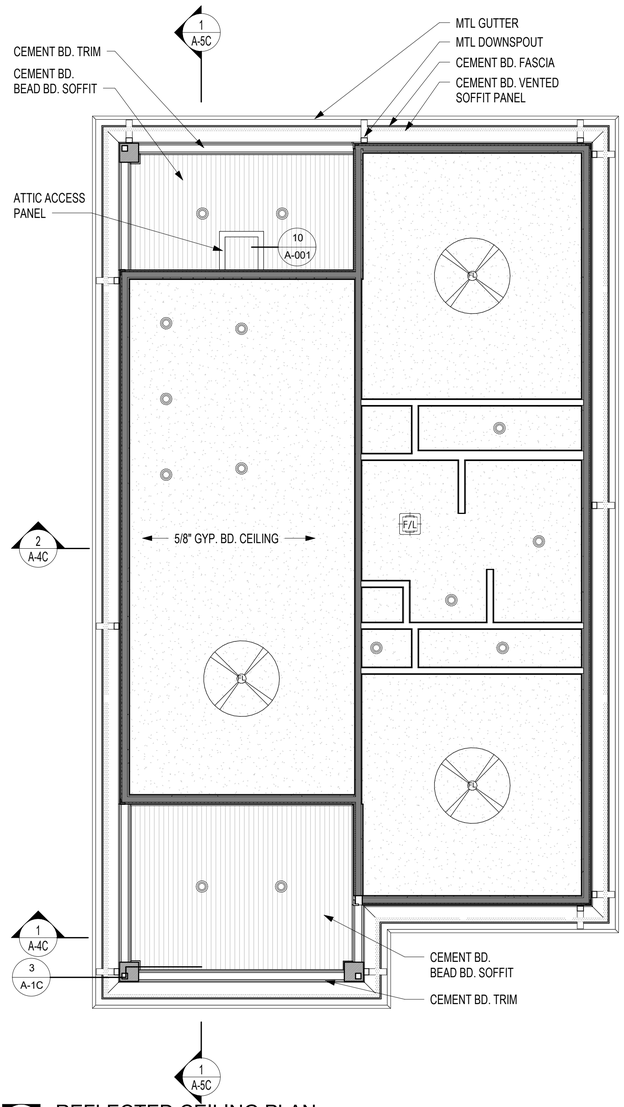

2 REFLECTED CEILING PLAN
1/4" = 1'-0" 1 / A-3C

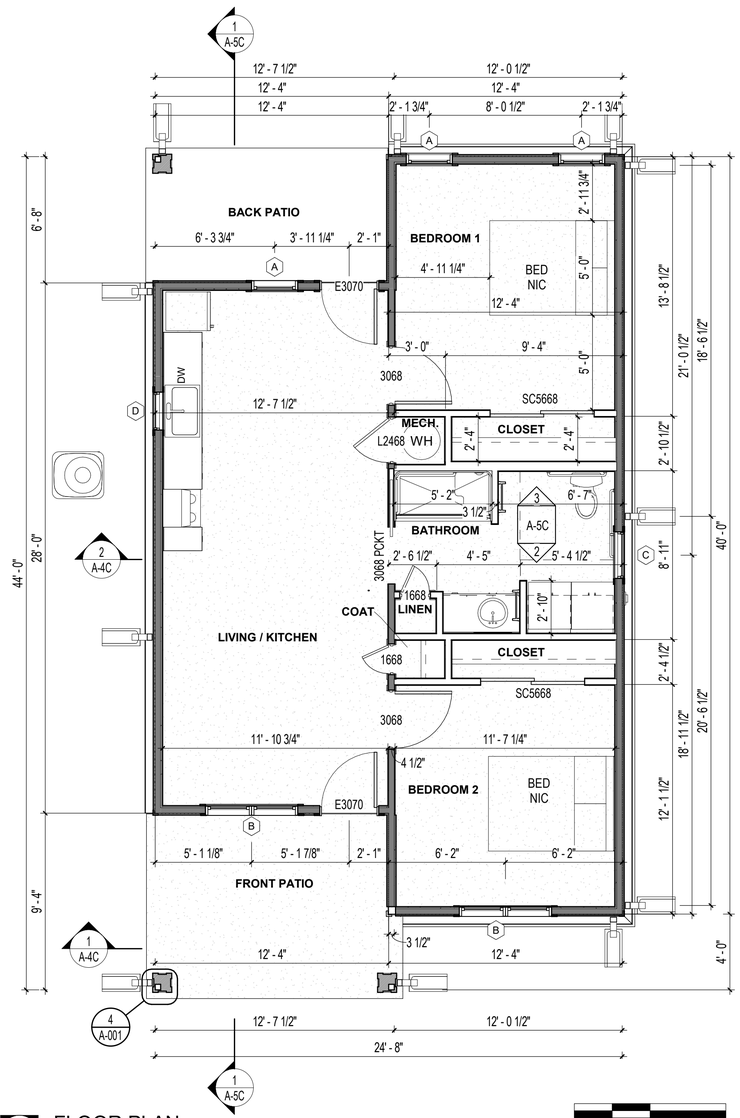

1 FLOOR PLAN
1/4" = 1'-0" 1 / A-3C

SCALE : 1/4" = 1'-0"

VETERANS' VILLAGE - 2 BED
CITY OF JONESBORO

AGGIE ROAD, JONESBORO, ARKANSAS

OWNER PROJECT # : 2020 : 12

REGARDING THE SENSITIVE ISSUES OF CONFIDENTIALITY AND COPYRIGHT, ANY REQUEST FOR THE RELEASE, OR REPRODUCTION OF THESE DRAWINGS MUST BE APPROVED BY COOPER MIXON ARCHITECTS PLLC

COOPER MIXON ARCHITECTS PLLC
LL237
REGISTERED ARCHITECTS
ARKANSAS
2020-03-06

COOPER MIXON architects
505 union street, 2nd flr
nashville, tn 37219
phone:615.338.0535
www.coopermixon.com

PERMIT SET

PROJECT NO.
1805

PROJECT NAME
VETERANS' VILLAGE

DATE
2020-03-06

CONTENTS
FLOOR PLAN, REFLECTED CEILING PLAN, ROOF PLAN

SHEET NUMBER
A-2C

3/12/2020 10:39:11 AM

NOTE:
CONTRACTOR TO CONSULT WITH ARCHITECT PLACEMENT OF ALL JOINTS IN CEMENT BD. SIDING AND TRIM BEFORE INSTALATION

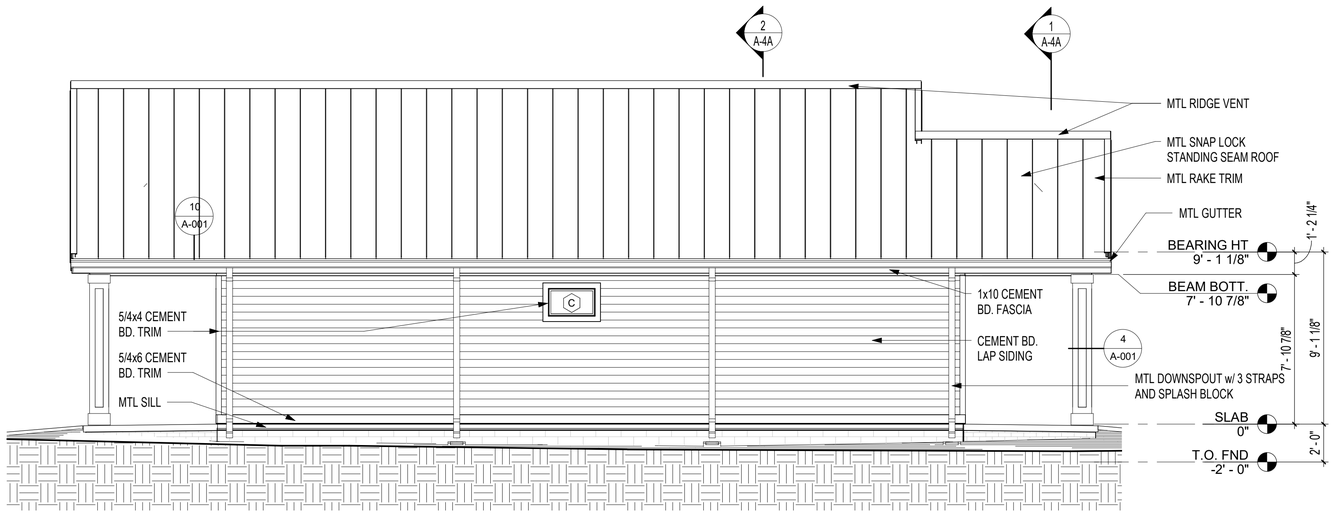

2 LEFT ELEVATION

1/4" = 1'-0"

SCALE : 1/4" = 1'-0"

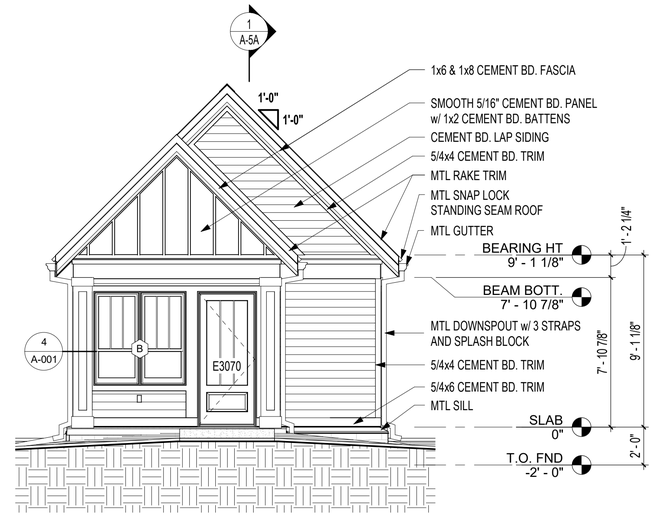

1 FRONT ELEVATION

1/4" = 1'-0"

SCALE : 1/4" = 1'-0"

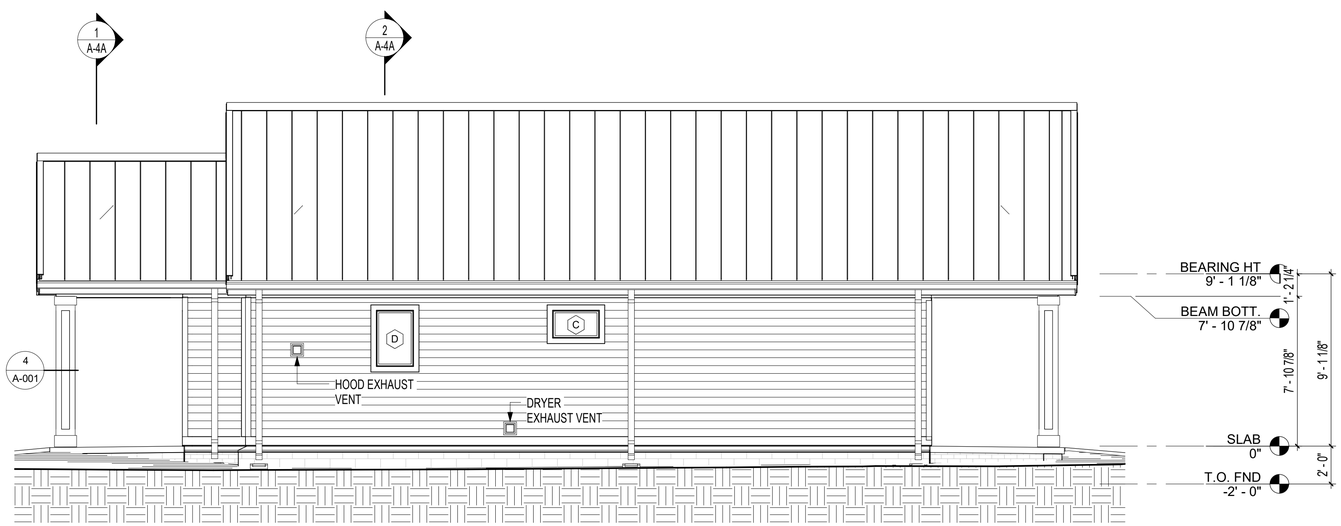

4 RIGHT ELEVATION

1/4" = 1'-0" 1 / A-2A

SCALE : 1/4" = 1'-0"

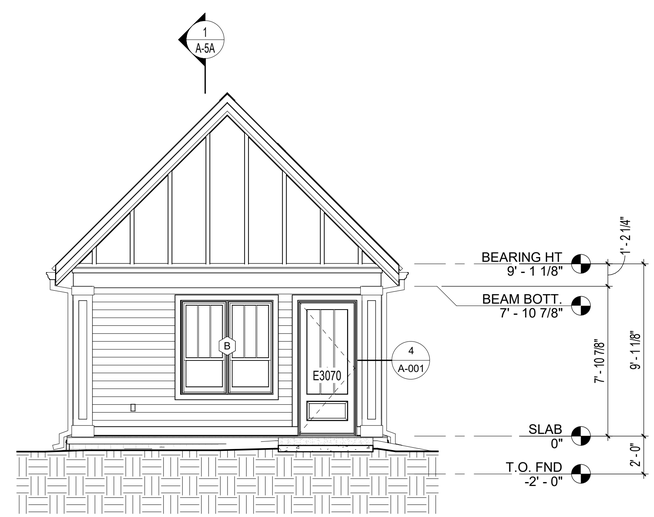

3 REAR ELEVATION

1/4" = 1'-0"

SCALE : 1/4" = 1'-0"

VETERANS' VILLAGE - 1 BED
CITY OF JONESBORO

AGGIE ROAD, JONESBORO, ARKANSAS

OWNER PROJECT # : 2020 : 12

REGARDING THE SENSITIVE ISSUES OF CONFIDENTIALITY AND COPYRIGHT, ANY REQUEST FOR THE RELEASE, OR REPRODUCTION OF THESE DRAWINGS MUST BE APPROVED BY COOPER MIXON ARCHITECTS PLLC

COOPER MIXON ARCHITECTS PLLC
LL237
REGISTERED ARCHITECTS
ARKANSAS
2020-03-06

COOPER MIXON architects
505 union street, 2nd flr jonesboro, ar 72401
phone 870.336.0536 www.coopermixon.com

PERMIT SET

PROJECT NO.
1805

PROJECT NAME
VETERANS' VILLAGE

DATE
2020-03-06

CONTENTS
EXTERIOR ELEVATIONS

SHEET NUMBER
A-3A

3/12/2020 11:02:57 AM

NOTE:
CONTRACTOR TO CONSULT WITH ARCHITECT PLACEMENT OF ALL JOINTS IN CEMENT BD. SIDING AND TRIM BEFORE INSTALATION

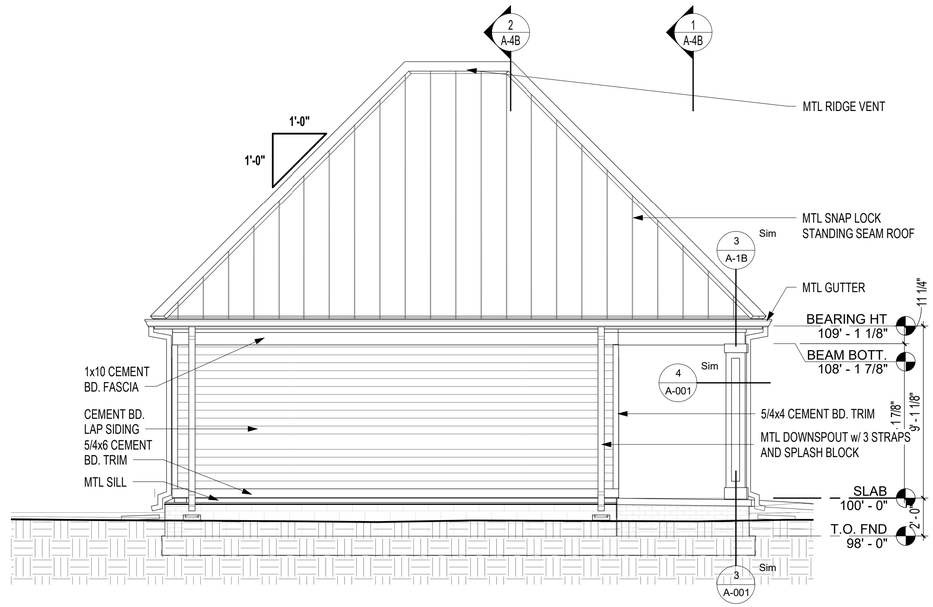

2 LEFT ELEVATION
1/4" = 1'-0" /

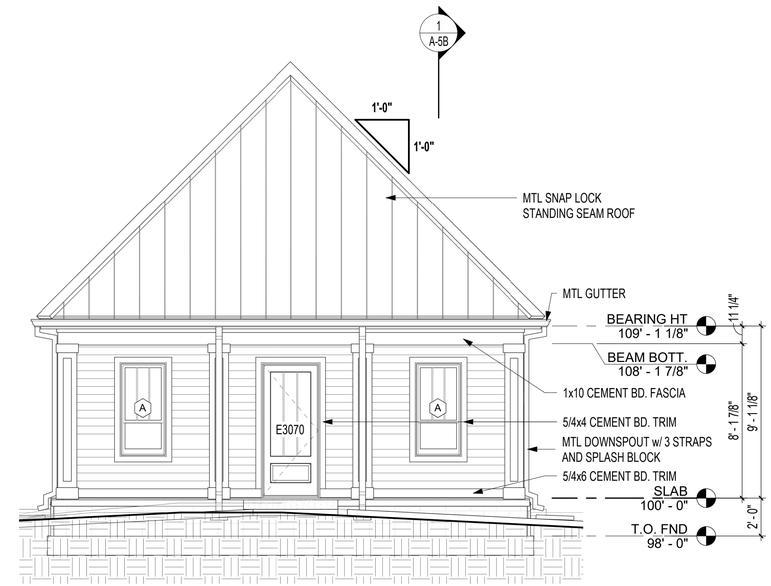

1 FRONT ELEVATION
1/4" = 1'-0" /

SCALE : 1/4" = 1'-0"

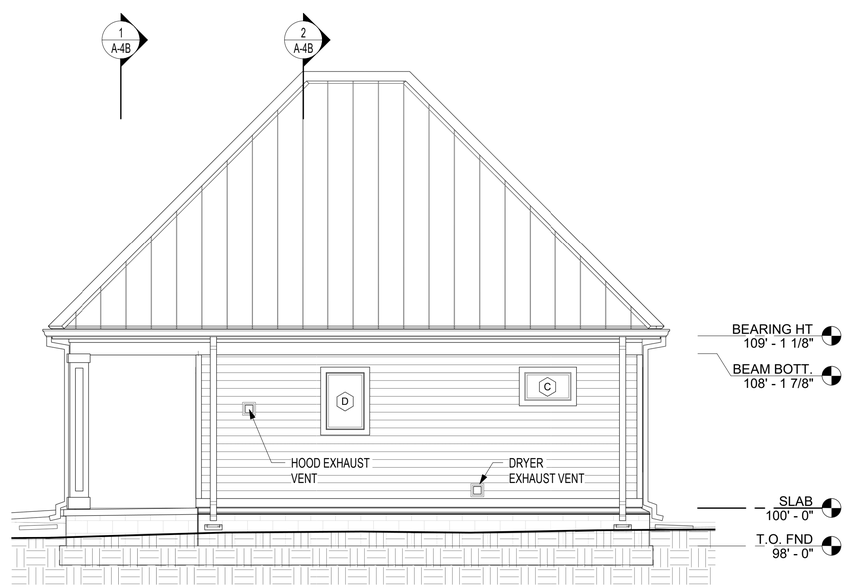

4 RIGHT ELEVATION
1/4" = 1'-0" 1 / A-2B

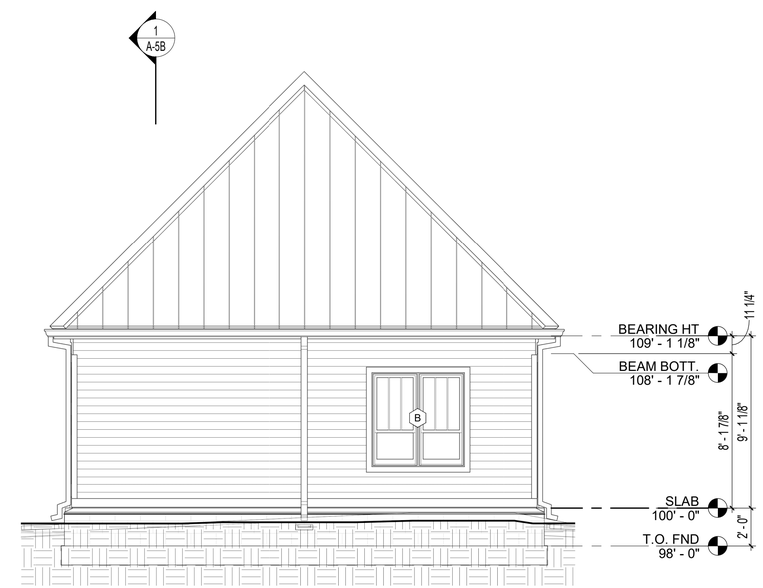

3 REAR ELEVATION
1/4" = 1'-0" /

SCALE : 1/4" = 1'-0"

VETERANS' VILLAGE - COTTAGE
CITY OF JONESBORO

AGGIE ROAD, JONESBORO, ARKANSAS

OWNER PROJECT # : 2020 : 12

REGARDING THE SENSITIVE ISSUES OF CONFIDENTIALITY AND COPYRIGHT, ANY REQUEST FOR THE RELEASE, OR REPRODUCTION OF THESE DRAWINGS MUST BE APPROVED BY COOPER MIXON ARCHITECTS PLLC

COOPER MIXON ARCHITECTS PLLC
LL237
REGISTERED ARCHITECTS
ARKANSAS
2020-03-06

COOPER MIXON
architects
505 union street, 2nd flr jonesboro, ar 72401
phone 870.336.0326 www.coopermixon.com

PERMIT SET

PROJECT NO.
1805

PROJECT NAME
VETERANS' VILLAGE

DATE
2020-03-06

CONTENTS
EXTERIOR ELEVATIONS

SHEET NUMBER
A-3B

3/12/2020 10:37:34 AM

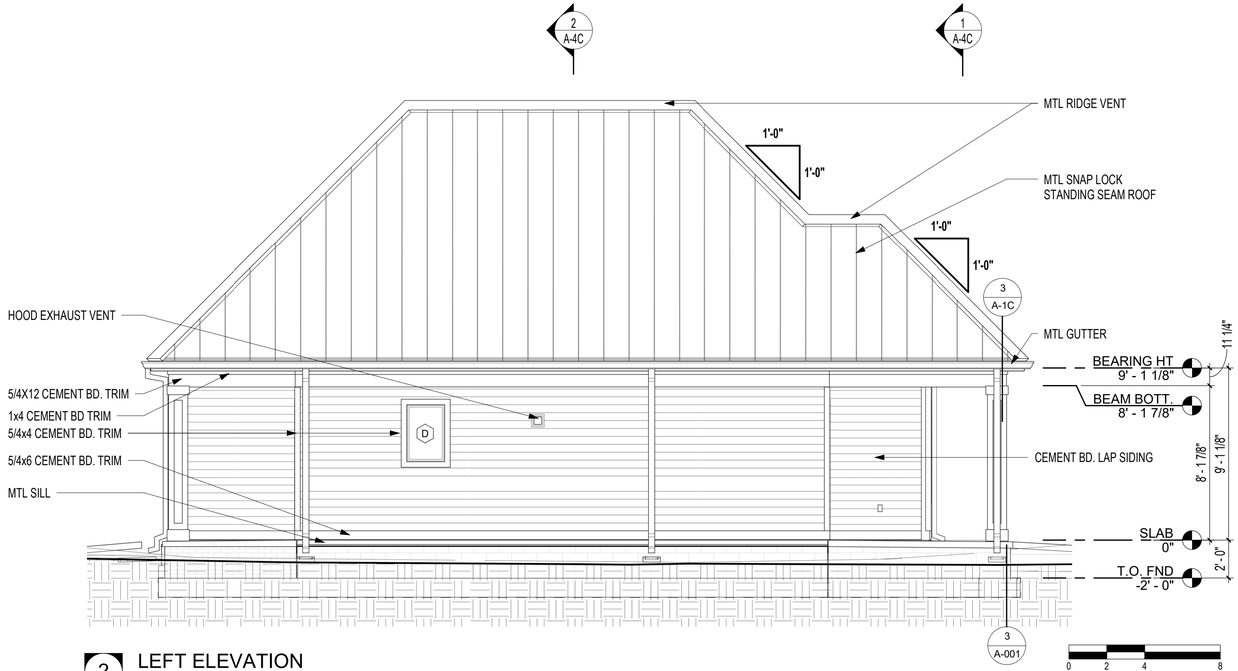

2 LEFT ELEVATION
1/4" = 1'-0"

SCALE : 1/4" = 1'-0"

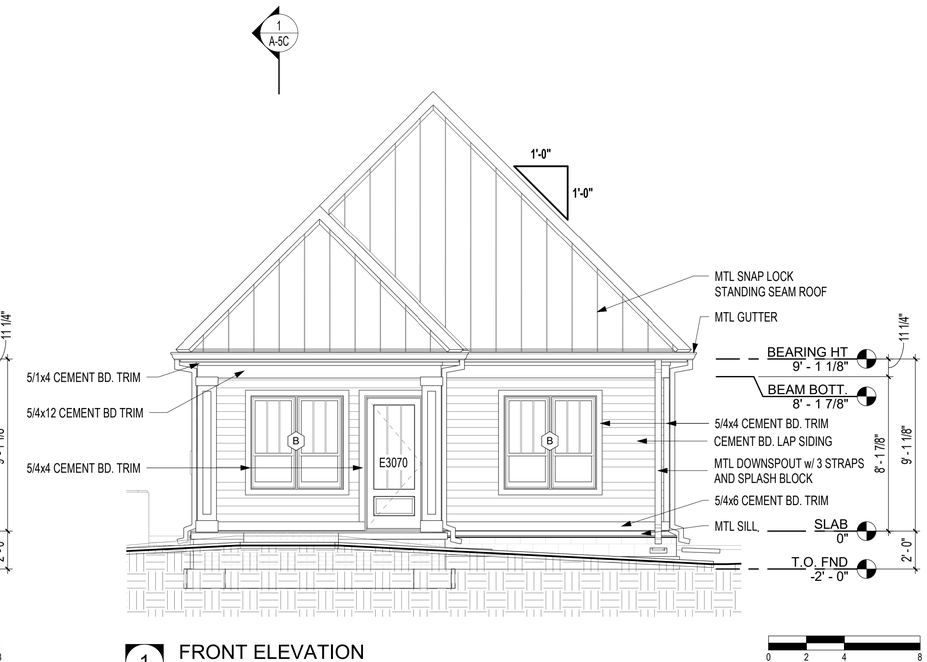

1 FRONT ELEVATION
1/4" = 1'-0"

SCALE : 1/4" = 1'-0"

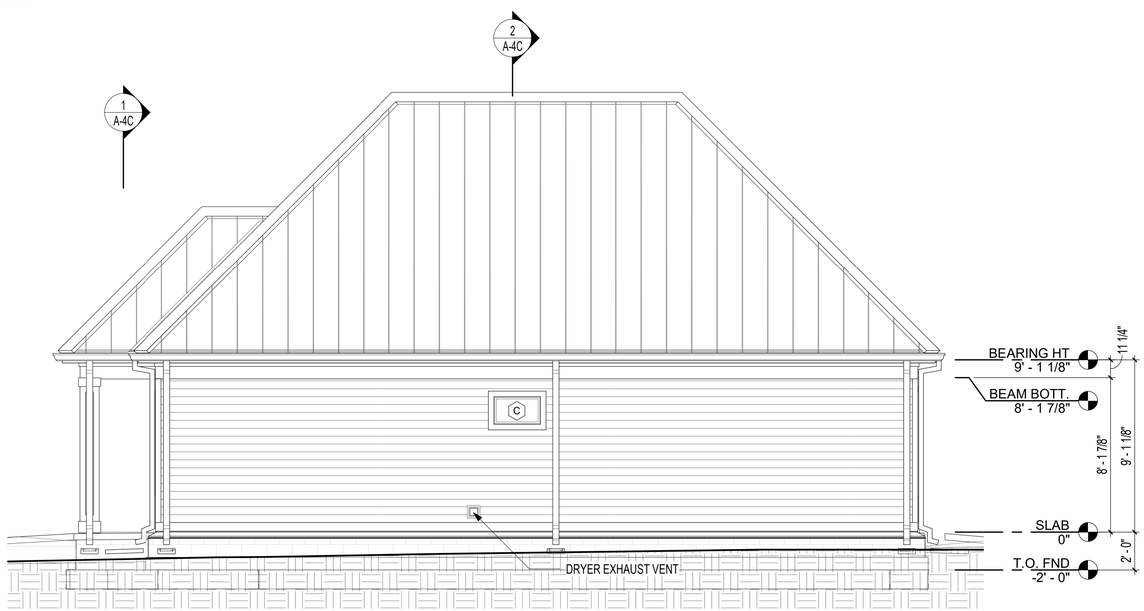

4 RIGHT ELEVATION
1/4" = 1'-0"

SCALE : 1/4" = 1'-0"

3 REAR ELEVATION
1/4" = 1'-0"

SCALE : 1/4" = 1'-0"

VETERANS' VILLAGE - 2 BED
CITY OF JONESBORO

AGGIE ROAD, JONESBORO, ARKANSAS

OWNER PROJECT # : 2020 : 12

REGARDING THE SENSITIVE ISSUES OF CONFIDENTIALITY AND COPYRIGHT, ANY REQUEST FOR THE RELEASE, OR REPRODUCTION OF THESE DRAWINGS MUST BE APPROVED BY COOPER MIXON ARCHITECTS PLLC

COOPER MIXON ARCHITECTS
LL237
REGISTERED ARCHITECTS
ARKANSAS
2020-03-06

COOPER MIXON
architects
505 union street, 2nd flr jonesboro, ar 72401
phone 870.336.0326 www.coopermixon.com

PERMIT SET

PROJECT NO.
1805

PROJECT NAME
VETERANS' VILLAGE

DATE
2020-03-06

CONTENTS
EXTERIOR ELEVATIONS

SHEET NUMBER
A-3C

3/12/2020 10:39:13 AM

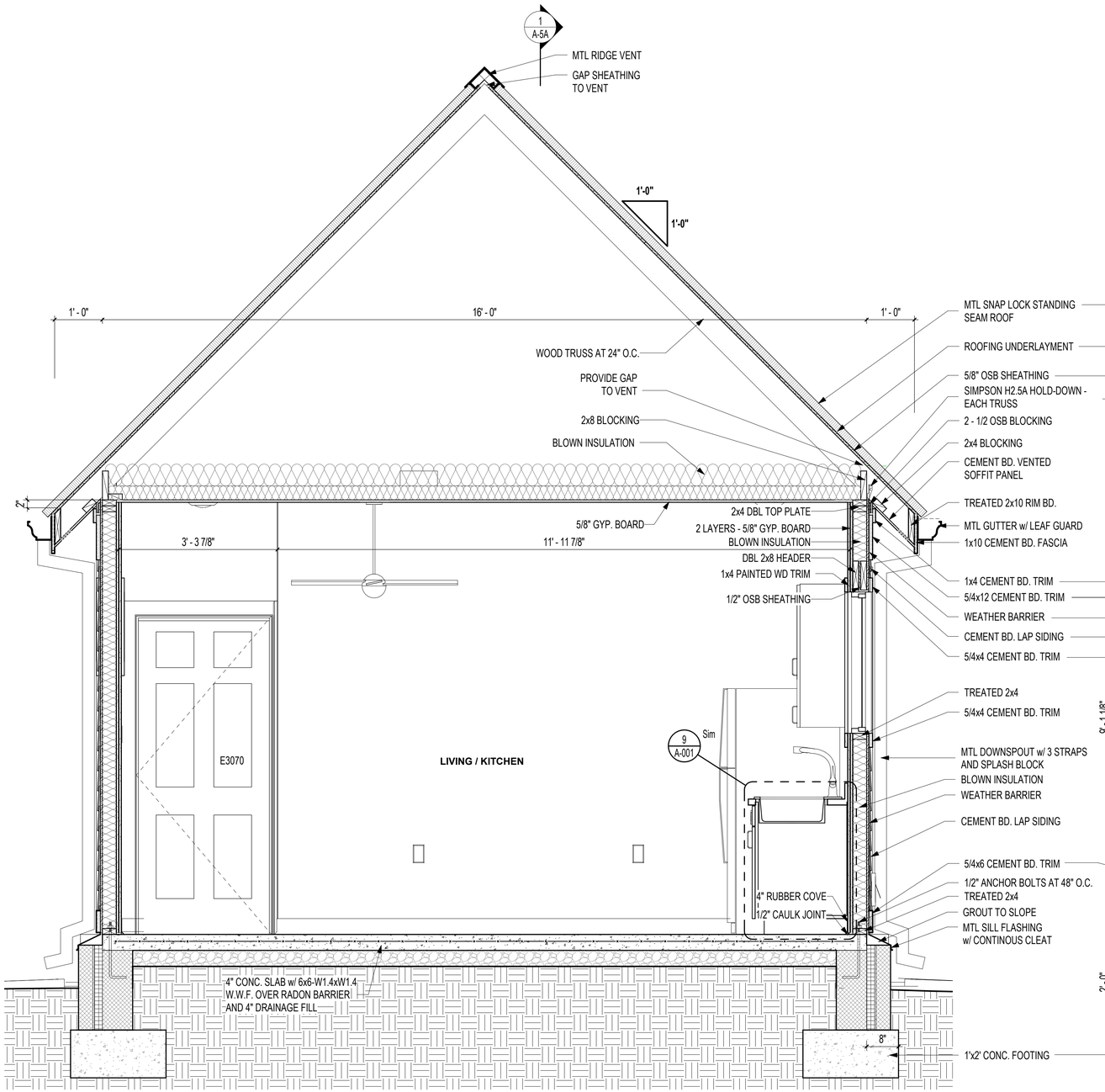

2 CROSS SECTION
3/4" = 1'-0" 1 / A-1A

0 1 2 4
SCALE : 3/4" = 1'-0"

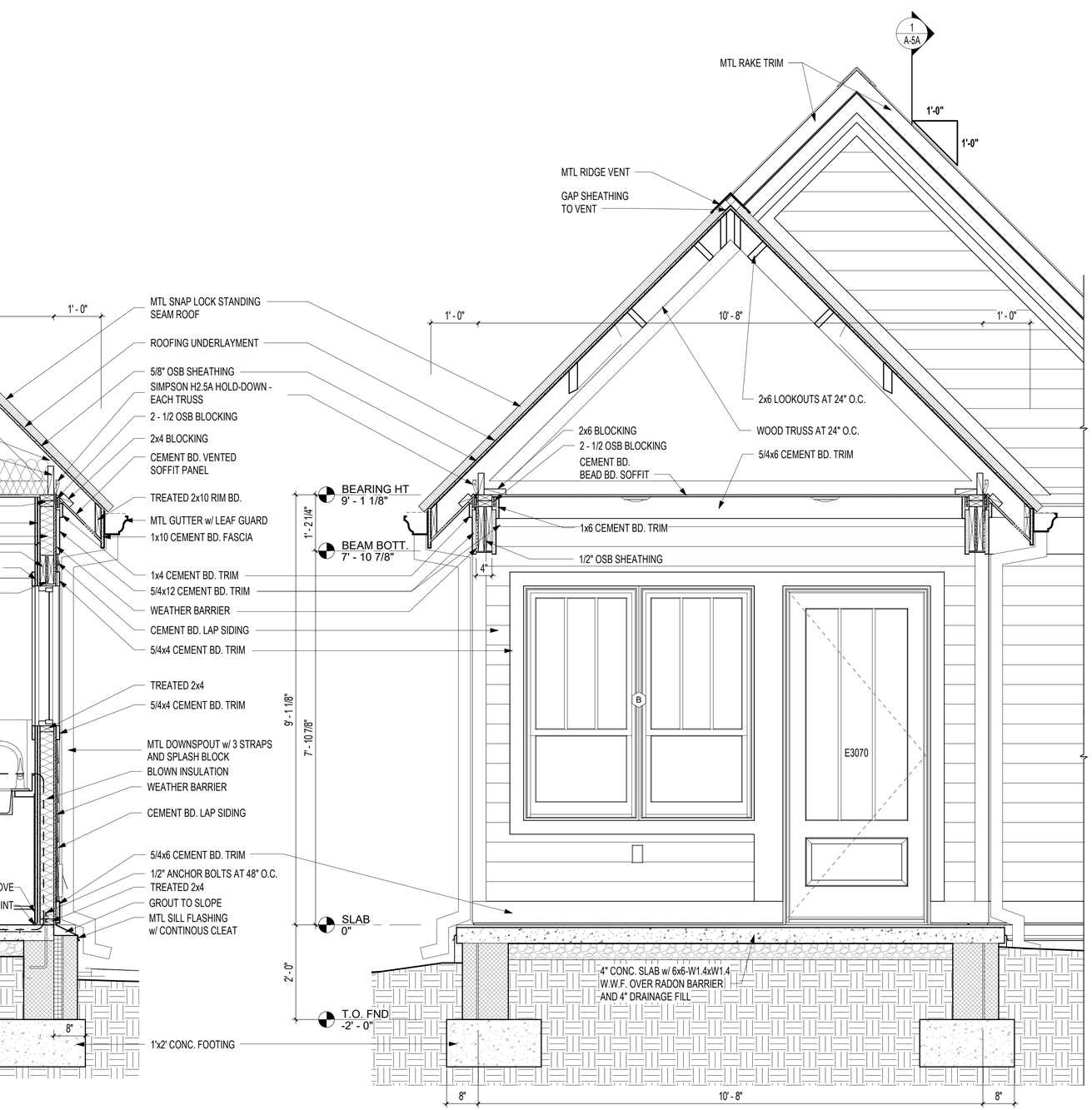

1 FRONT PORCH SECTION
3/4" = 1'-0" 1 / A-1A

0 1 2 4
SCALE : 3/4" = 1'-0"

VETERANS' VILLAGE - 1 BED
CITY OF JONESBORO

OWNER PROJECT #: 2020 : 12

AGGIE ROAD, JONESBORO, ARKANSAS

REGARDING THE SENSITIVE ISSUES OF CONFIDENTIALITY AND COPYRIGHT, ANY REQUEST FOR THE RELEASE, OR REPRODUCTION OF THESE DRAWINGS MUST BE APPROVED BY COOPER MIXON ARCHITECTS PLLC

COOPER MIXON ARCHITECTS PLLC
LL237
REGISTERED ARCHITECT
ARKANSAS
2020-03-06

COOPER MIXON architects
505 union street, 2nd flr
jonesboro, ar 72401
phone 870.336.0536
www.coopermixon.com

PERMIT SET

PROJECT NO.
1805

PROJECT NAME
VETERANS' VILLAGE

DATE
2020-03-06

CONTENTS
SECTIONS

SHEET NUMBER
A-4A

3/12/2020 11:02:58 AM

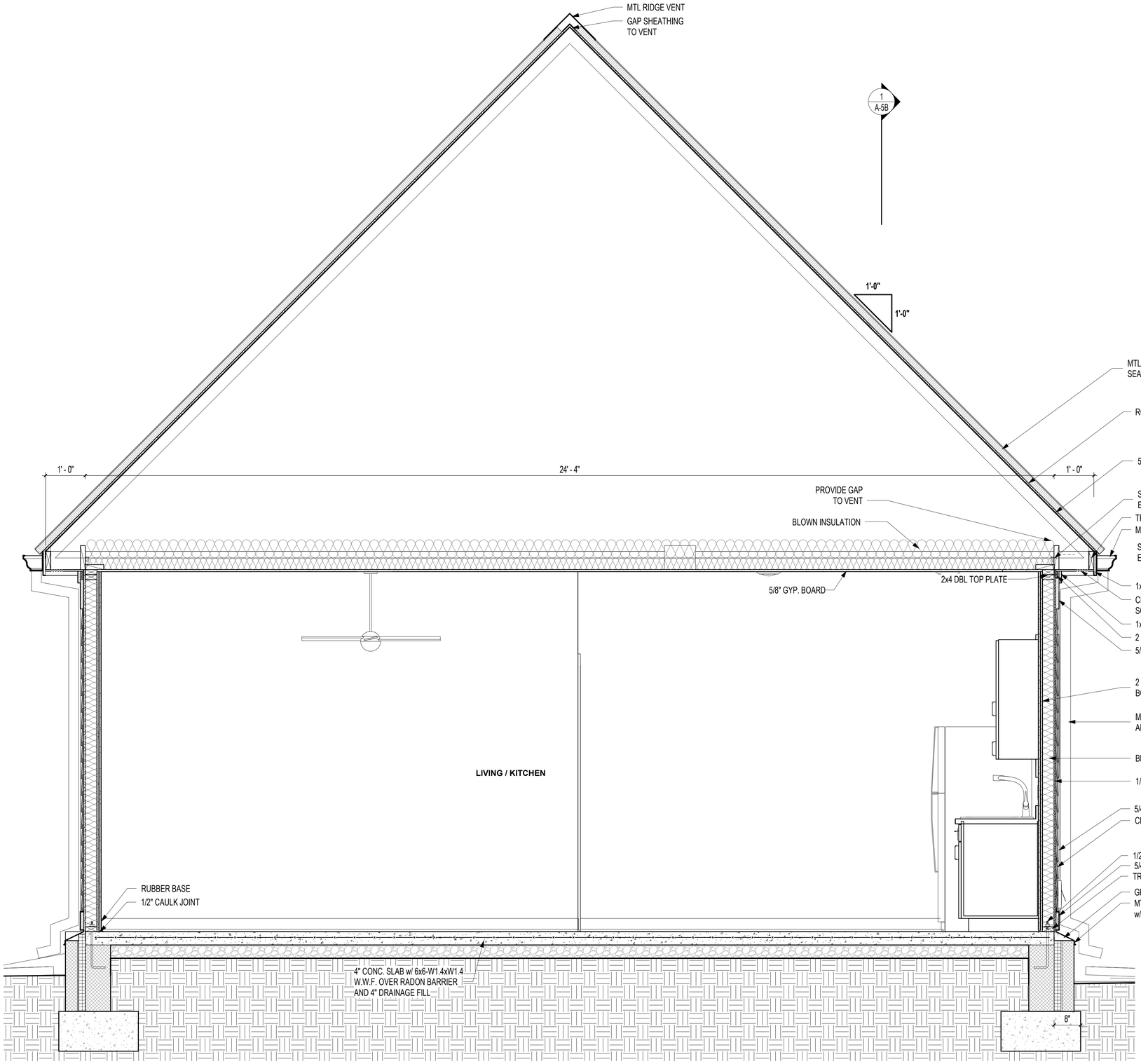

2 CROSS SECTION
3/4" = 1'-0" 1 / A-1B

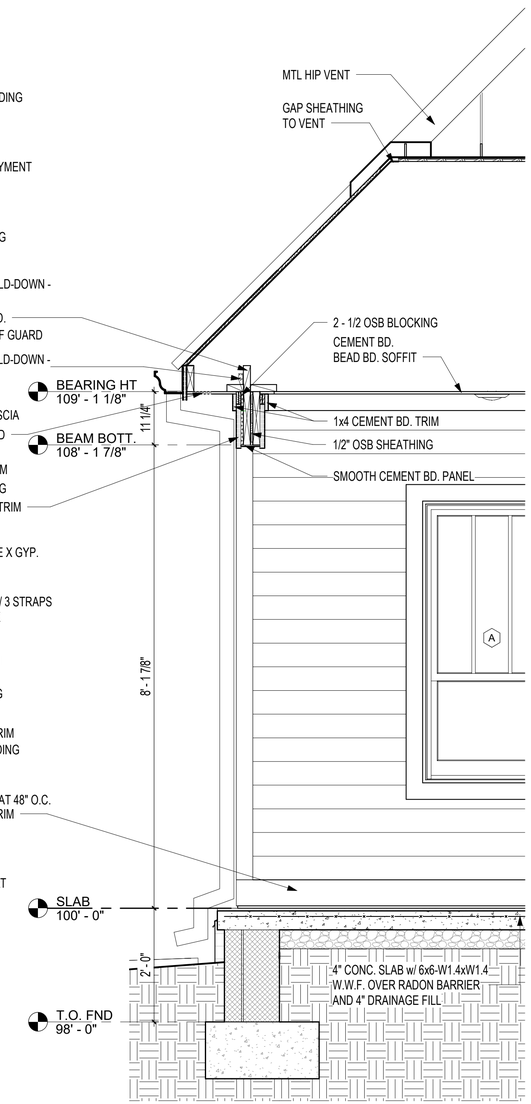

1 FRONT PORCH SECTION
3/4" = 1'-0" 1 / A-1B

0 1 2 4
SCALE : 3/4" = 1'-0"

3/12/2020 10:37:35 AM

VETERANS' VILLAGE - COTTAGE
CITY OF JONESBORO

AGGIE ROAD, JONESBORO, ARKANSAS

OWNER PROJECT # : 2020 : 12

REGARDING THE SENSITIVE ISSUES OF CONFIDENTIALITY AND COPYRIGHT, ANY REQUEST FOR THE RELEASE, OR REPRODUCTION OF THESE DRAWINGS MUST BE APPROVED BY COOPER MIXON ARCHITECTS PLLC

COOPER MIXON ARCHITECTS
LL237
REGISTERED ARCHITECTS
ARKANSAS
2020-03-06

COOPER MIXON architects
505 union street, 2nd fl jonesboro, ar 72401
phone 870.336.0536 www.coopermixon.com

PERMIT SET

PROJECT NO.
1805

PROJECT NAME
VETERANS' VILLAGE

DATE
2020-03-06

CONTENTS
SECTIONS

SHEET NUMBER
A-4B

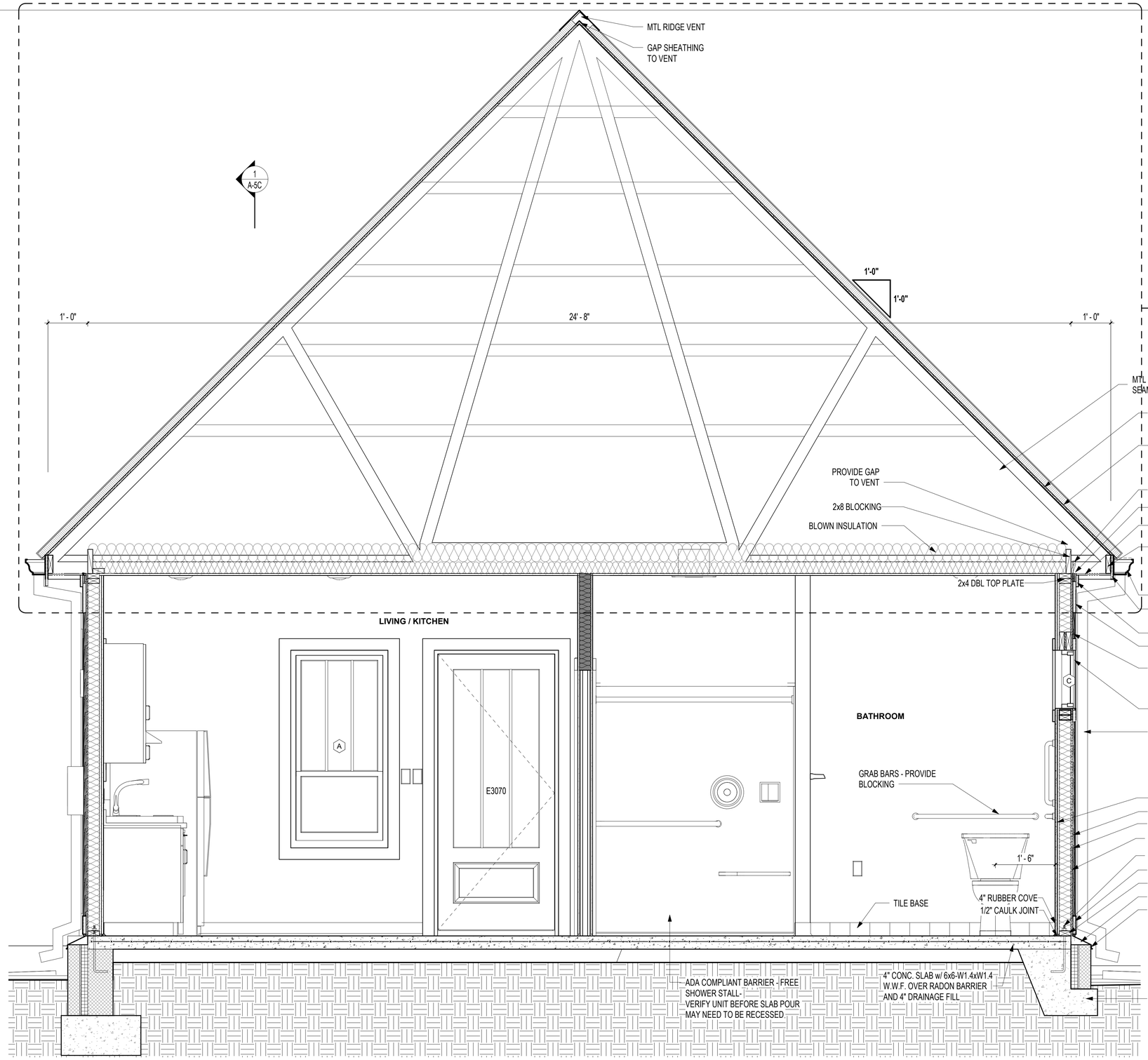

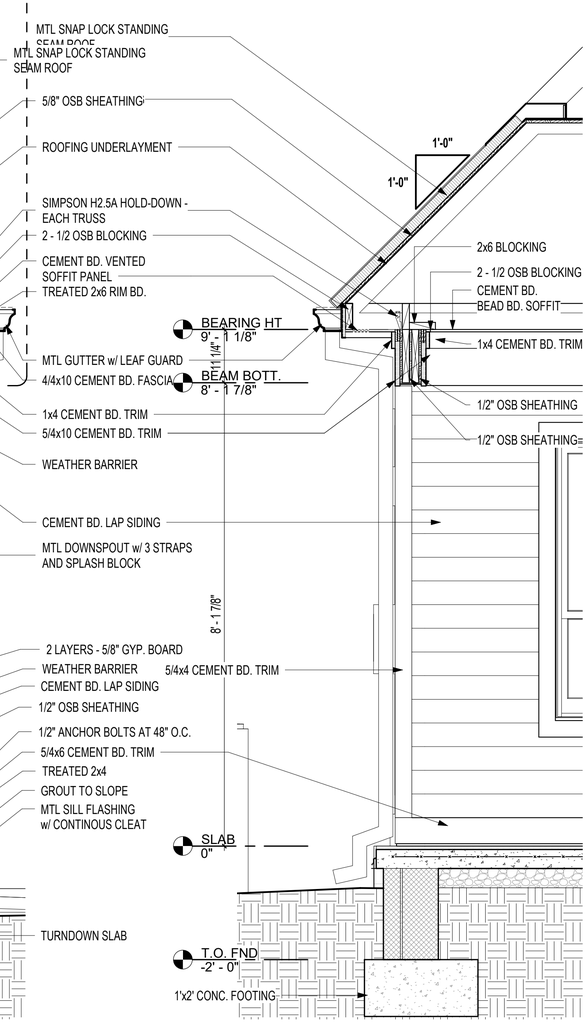

2 CROSS SECTION
3/4" = 1'-0" 1 / A-1C

SCALE : 3/4" = 1'-0"

1 FRONT PORCH SECTION
3/4" = 1'-0" 1 / A-1C

VETERANS' VILLAGE - 2 BED
CITY OF JONESBORO

OWNER PROJECT # : 2020 : 12

AGGIE ROAD, JONESBORO, ARKANSAS

REGARDING THE SENSITIVE ISSUES OF CONFIDENTIALITY AND COPYRIGHT, ANY REQUEST FOR THE RELEASE, OR REPRODUCTION OF THESE DRAWINGS MUST BE APPROVED BY COOPER MIXON ARCHITECTS PLLC

COOPER MIXON ARCHITECTS PLLC
LL237
REGISTERED ARCHITECT
ARKANSAS
2020-03-06

COOPER MIXON architects
505 union street, 2nd flr
jonesboro, ar 72401
phone:870.336.0536
www.coopermixon.com

PERMIT SET

PROJECT NO.
1805

PROJECT NAME
VETERANS' VILLAGE

DATE
2020-03-06

CONTENTS
SECTIONS

SHEET NUMBER
A-4C

3/12/2020 10:39:14 AM

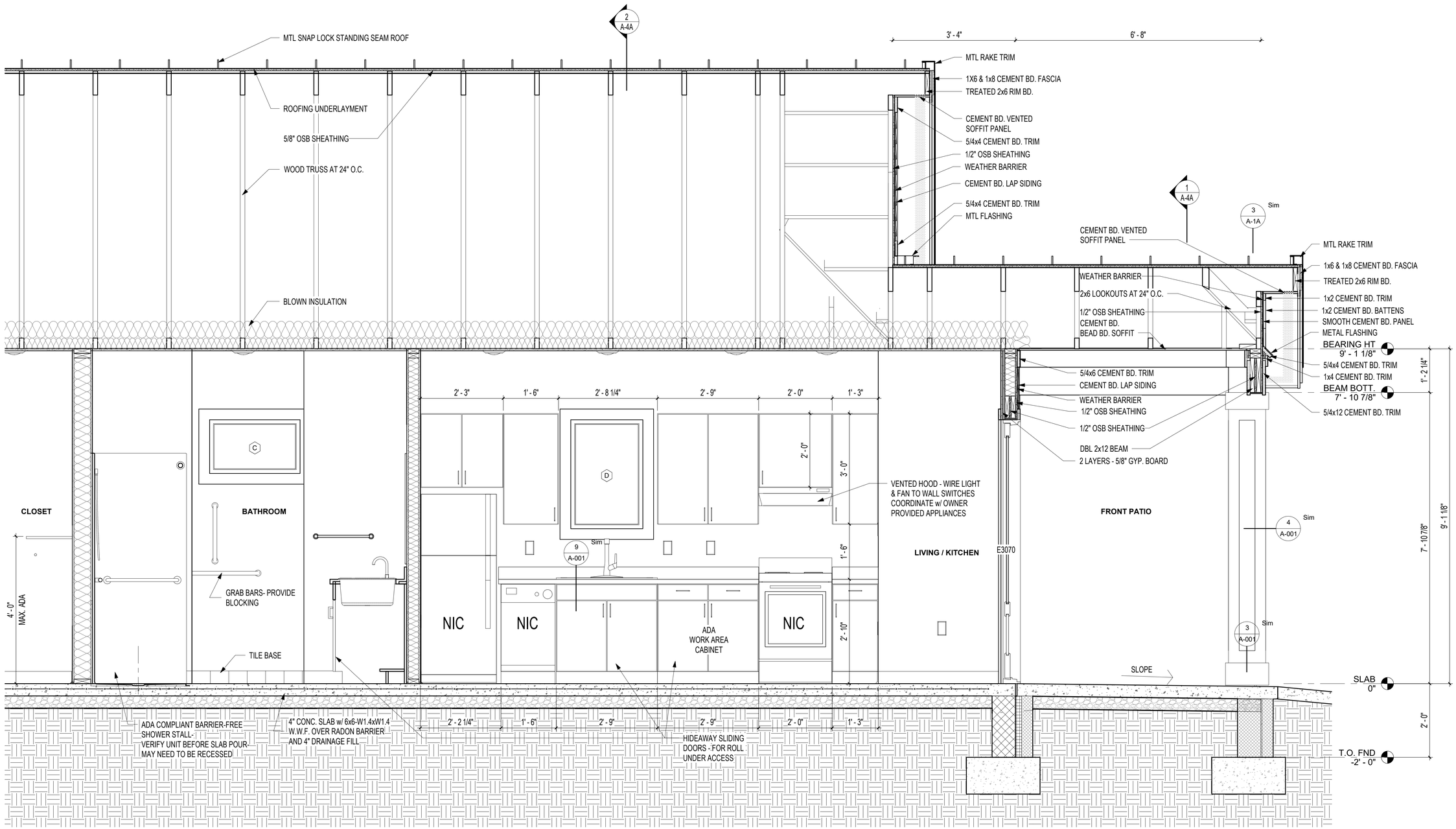

1 LONG SECTION

3/4" = 1'-0" 1 / A-1A

0 1 2 4

SCALE : 3/4" = 1'-0"

3/12/2020 11:02:59 AM

VETERANS' VILLAGE - 1 BED
CITY OF JONESBORO

AGGIE ROAD, JONESBORO, ARKANSAS

OWNER PROJECT # : 2020 : 12

REGARDING THE SENSITIVE ISSUES OF CONFIDENTIALITY AND COPYRIGHT, ANY REQUEST FOR THE RELEASE, OR REPRODUCTION OF THESE DRAWINGS MUST BE APPROVED BY COOPER MIXON ARCHITECTS PLLC

COOPER MIXON ARCHITECTS PLLC
LL237
REGISTERED ARCHITECTS
ARKANSAS
2020-03-06

COOPER MIXON architects
505 union street, 2nd flr jonesboro, ar 72401
phone 870.336.0536 www.coopermixon.com

PERMIT SET

PROJECT NO.
1805

PROJECT NAME
VETERANS' VILLAGE

DATE
2020-03-06

CONTENTS
SECTION

SHEET NUMBER
A-5A

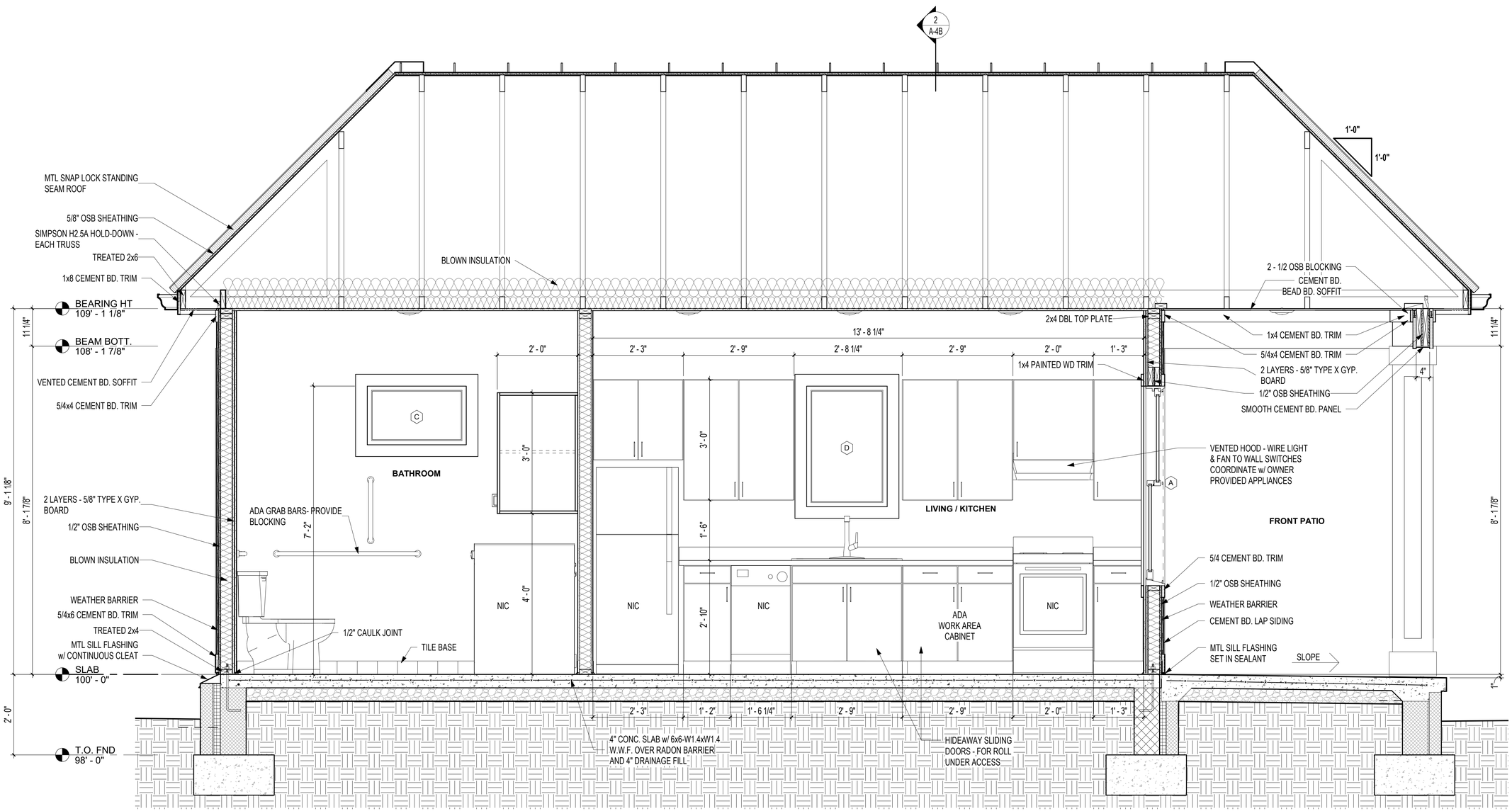

1 LONG SECTION
3/4" = 1'-0" 1 / A-1B

0 1 2 4
SCALE : 3/4" = 1'-0"

VETERANS' VILLAGE - COTTAGE
CITY OF JONESBORO

OWNER PROJECT # : 2020 : 12

AGGIE ROAD, JONESBORO, ARKANSAS

REGARDING THE SENSITIVE ISSUES OF CONFIDENTIALITY AND COPYRIGHT, ANY REQUEST FOR THE RELEASE, OR REPRODUCTION OF THESE DRAWINGS MUST BE APPROVED BY COOPER MIXON ARCHITECTS PLLC

COOPER MIXON ARCHITECTS PLLC
LL237
REGISTERED ARCHITECTS
ARKANSAS
2020-03-06

COOPER MIXON architects
505 union street, 2nd flr jonesboro, ar 72401
phone 870.336.0536 www.coopermixon.com

PERMIT SET

PROJECT NO.
1805

PROJECT NAME
VETERANS' VILLAGE

DATE
2020-03-06

CONTENTS
SECTION

SHEET NUMBER
A-5B

3/12/2020 10:37:36 AM

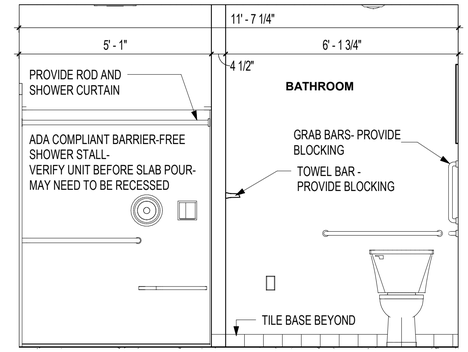

3 BATHROOM ELEVATION
1/2" = 1'-0" 1 / A-2C

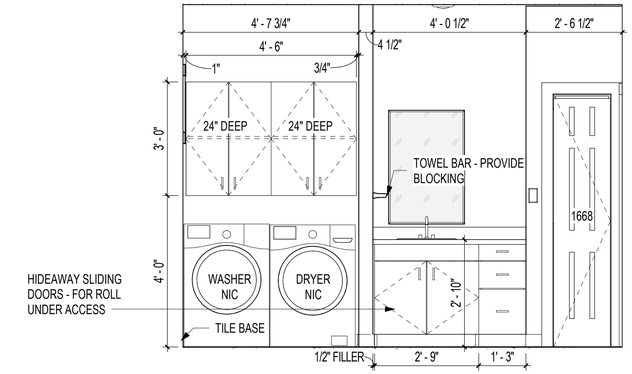

2 BATHROOM ELEVATION
1/2" = 1'-0" 1 / A-2C

0 1 2 4
SCALE : 1/2" = 1'-0"

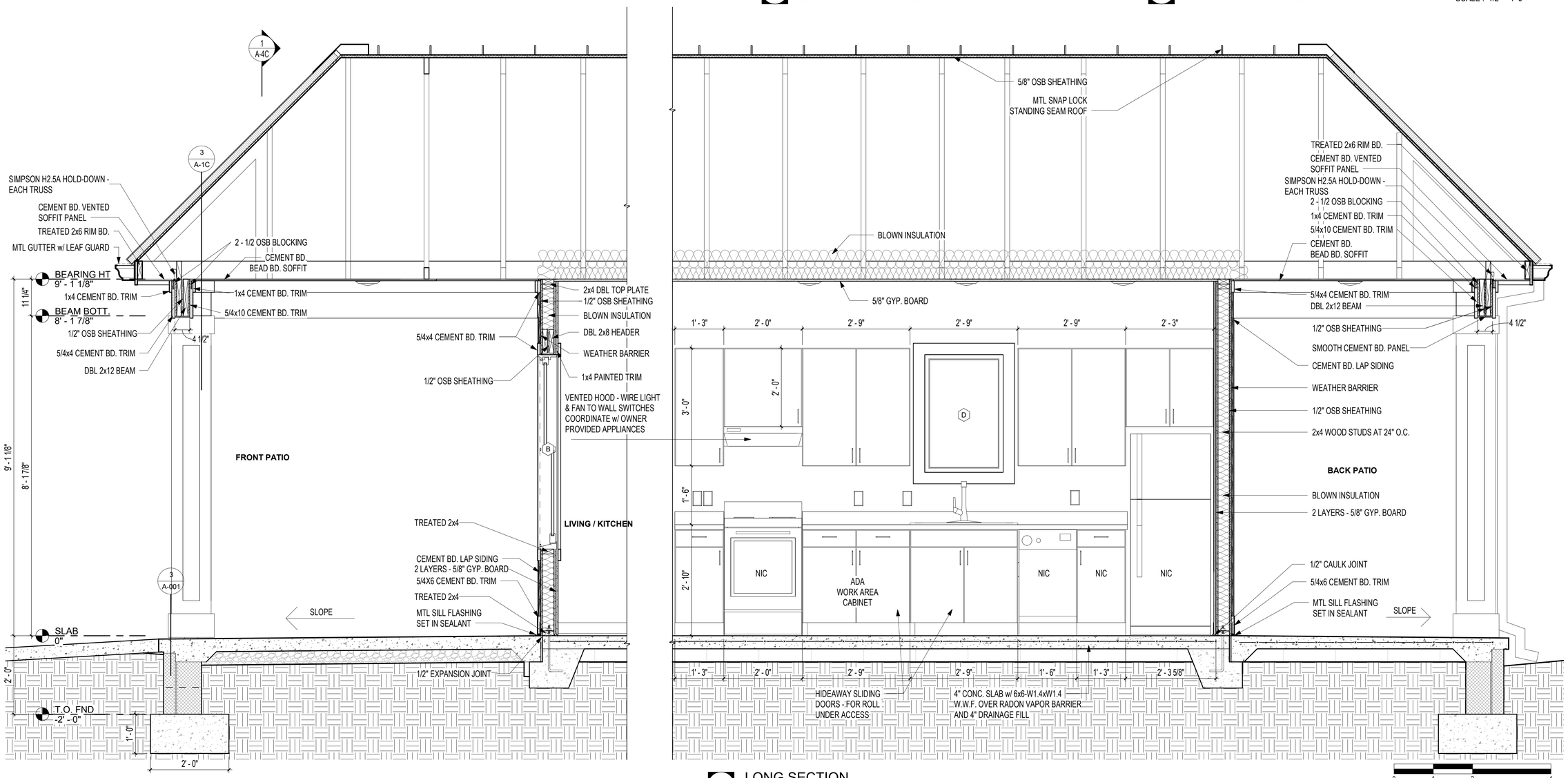

1 LONG SECTION
3/4" = 1'-0" 1 / A-1C

0 1 2 4
SCALE : 3/4" = 1'-0"

VETERANS' VILLAGE - 2 BED
CITY OF JONESBORO

AGGIE ROAD, JONESBORO, ARKANSAS

OWNER PROJECT # : 2020 : 12

REGARDING THE SENSITIVE ISSUES OF CONFIDENTIALITY AND COPYRIGHT, ANY REQUEST FOR THE RELEASE, OR REPRODUCTION OF THESE DRAWINGS MUST BE APPROVED BY COOPER MIXON ARCHITECTS PLLC

COOPER MIXON ARCHITECTS PLLC
LL237
REGISTERED ARCHITECTS
ARKANSAS
2020-03-06

COOPER MIXON architects
506 union street, 2nd flr
jonesboro, ar 72401
phone:870.336.5536
www.coopermixon.com

PERMIT SET

PROJECT NO.
1805

PROJECT NAME
VETERANS' VILLAGE

DATE
2020-03-06

CONTENTS
SECTION

SHEET NUMBER
A-5C

3/12/2020 10:39:15 AM

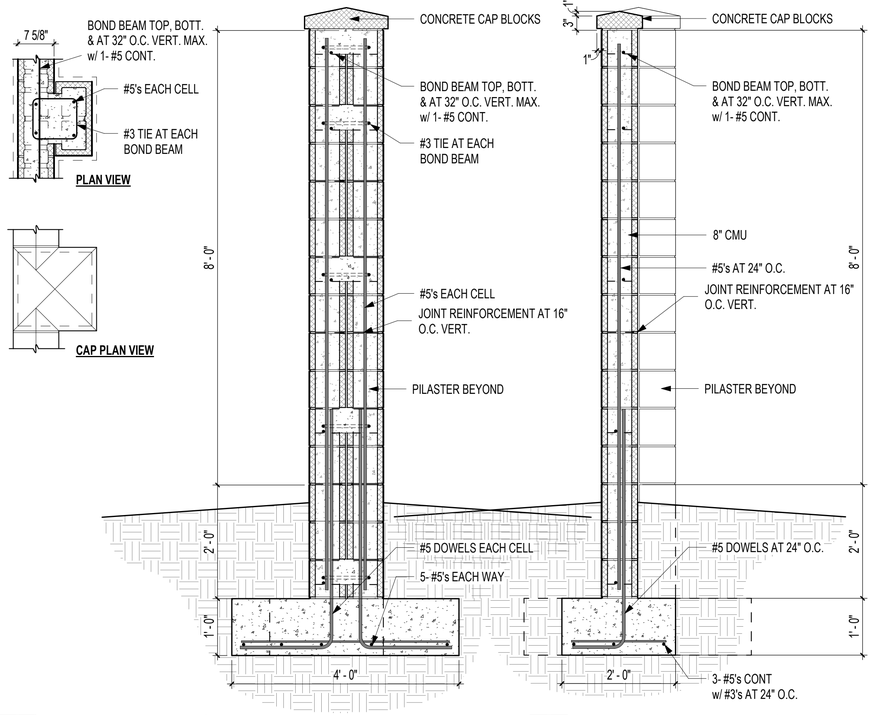

3 SOUND WALL PILASTER
3/4" = 1'-0" 1 / AS-1

2 SOUND WALL SECTION
3/4" = 1'-0" 1 / AS-1

SCALE : 3/4" = 1'-0"

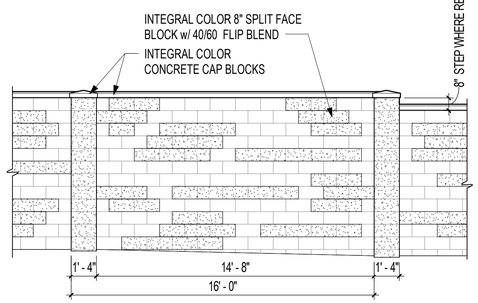

4 SOUND WALL ELEVATION
1/4" = 1'-0"

SCALE : 1/4" = 1'-0"

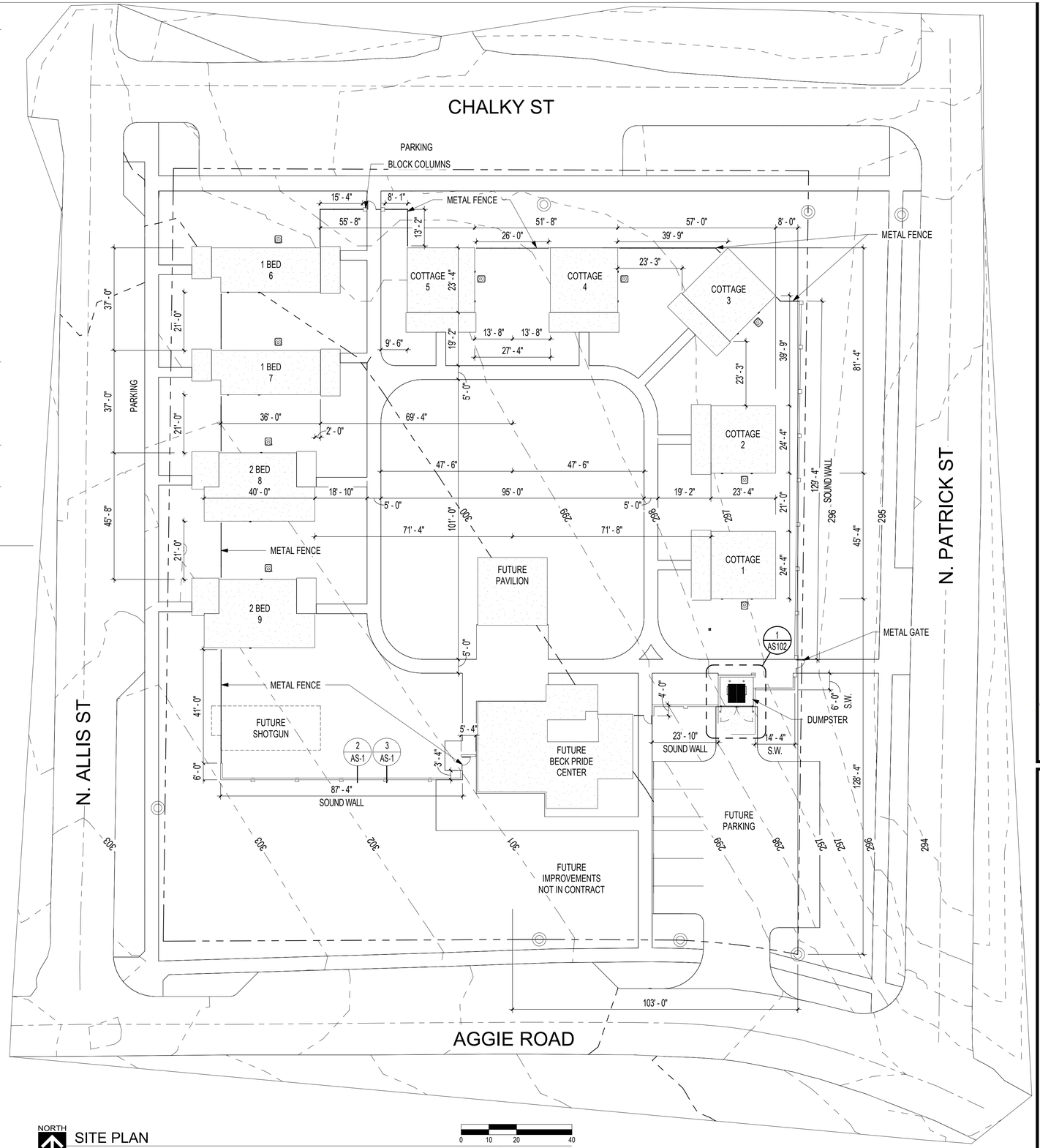

NORTH
SITE PLAN
1" = 20'-0"

SCALE : 1" = 20'

VETERANS' VILLAGE
CITY OF JONESBORO

AGGIE ROAD, JONESBORO, ARKANSAS

OWNER PROJECT # : 2020 : 12

REGARDING THE SENSITIVE ISSUES OF CONFIDENTIALITY AND COPYRIGHT, ANY REQUEST FOR THE RELEASE, OR REPRODUCTION OF THESE DRAWINGS MUST BE APPROVED BY COOPER MIXON ARCHITECTS PLLC

COOPER MIXON ARCHITECTS PLLC
LL237
REGISTERED ARCHITECTS
ARKANSAS
2020-03-06

COOPER MIXON architects
505 union street, 2nd flr jonesboro, ar 72401
phone 870.336.6556 www.coopermixon.com

PERMIT SET

PROJECT NO.
1805

PROJECT NAME
VETERANS' VILLAGE

DATE
2020-03-06

CONTENTS
ARCHITECTURAL SITE PLAN, SOUND WALL DETAIL

SHEET NUMBER
AS-1

3/12/2020 10:41:59 AM

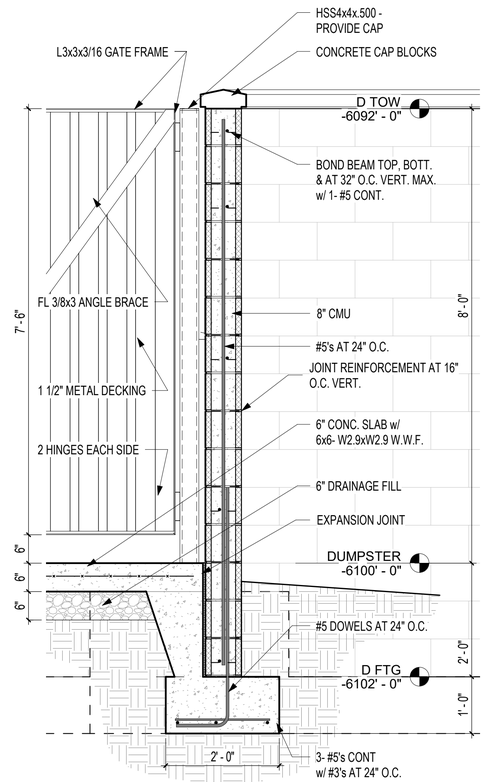

6 WALL SECTION
3/4" = 1'-0" 1 / AS-2
SCALE : 3/4" = 1'-0"

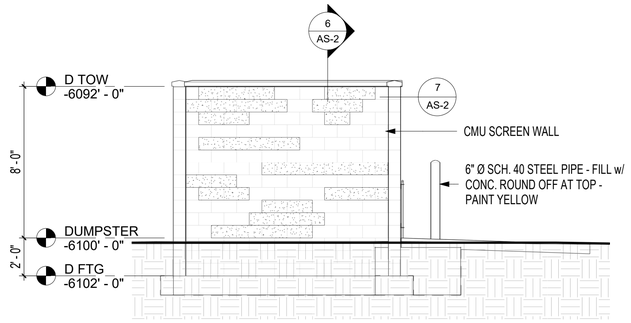

4 LEFT ELEVATION
1/4" = 1'-0" 1 / AS-2

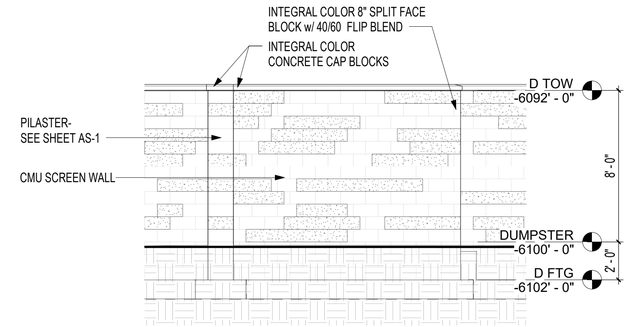

3 REAR ELEVATION
1/4" = 1'-0" /

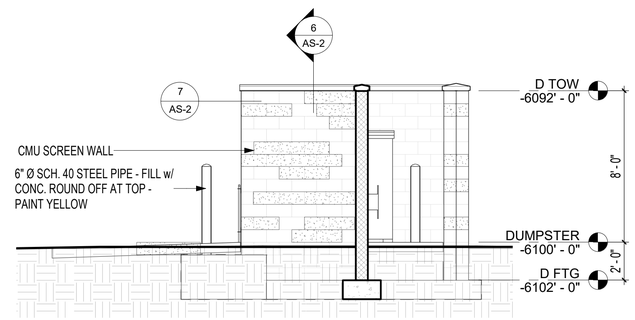

5 RIGHT ELEVATION
1/4" = 1'-0" 1 / AS-2

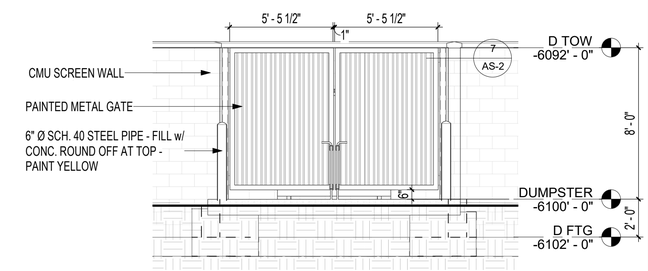

2 FRONT ELEVATION
1/4" = 1'-0" 1 / AS-2
SCALE : 1/4" = 1'-0"

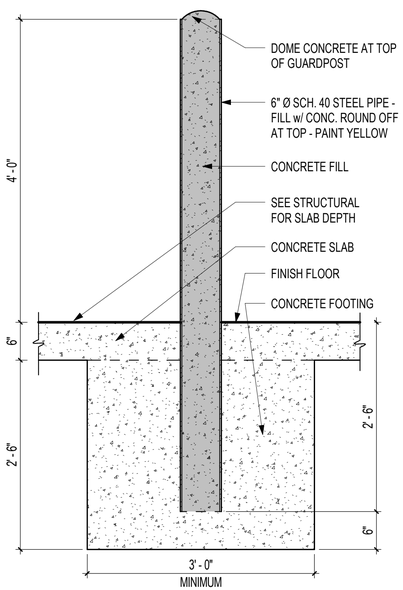

9 BOLLARD DETAIL
1" = 1'-0" 1 / AS-2

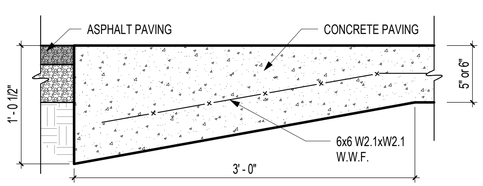

10 CONCRETE TO ASPHALT DETAIL
1 1/2" = 1'-0" 1 / AS-2

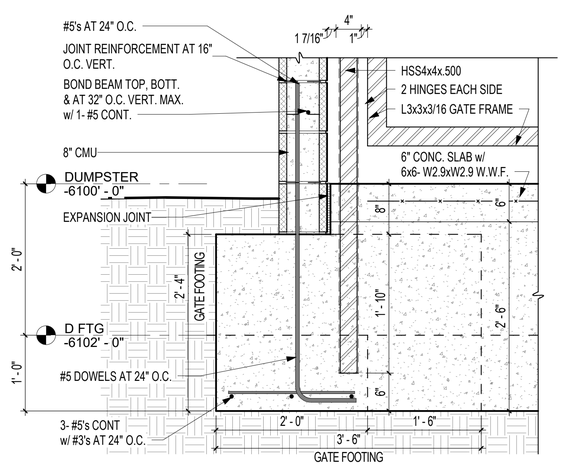

8 GATE POLE FOOTING DETAIL
1" = 1'-0" 7 / AS-2
SCALE : 1" = 1'-0"

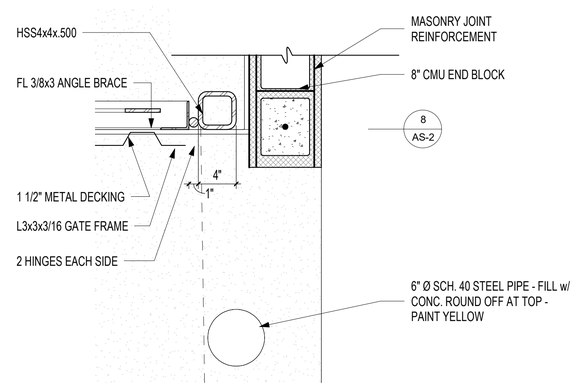

7 DUMPSTER GATE DETAIL
1 1/2" = 1'-0" 1 / AS-2
SCALE : 1-1/2" = 1'-0"

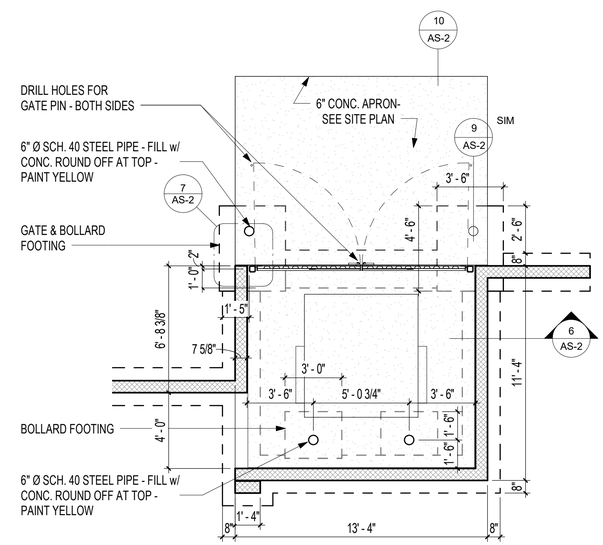

NORTH
DUMPSTER PLAN
1/4" = 1'-0"
SCALE : 1/4" = 1'-0"

VETERANS' VILLAGE
CITY OF JONESBORO

AGGIE ROAD, JONESBORO, ARKANSAS

OWNER PROJECT # : 2020 : 12

REGARDING THE SENSITIVE ISSUES OF CONFIDENTIALITY AND COPYRIGHT, ANY REQUEST FOR THE RELEASE, OR REPRODUCTION OF THESE DRAWINGS MUST BE APPROVED BY COOPER MIXON ARCHITECTS PLLC

COOPER MIXON ARCHITECTS PLLC
LL237
REGISTERED ARCHITECTS
ARKANSAS
2020-03-06

COOPER MIXON architects
505 union street, 2nd flr pressbons, ar 72901
phone 870.336.0535 www.coopermixon.com

PERMIT SET

PROJECT NO.
1805

PROJECT NAME
VETERANS' VILLAGE

DATE
2020-03-06

CONTENTS
DUMPSTER SCREEN WALL

SHEET NUMBER
AS-2

3/12/2020 10:42:47 AM

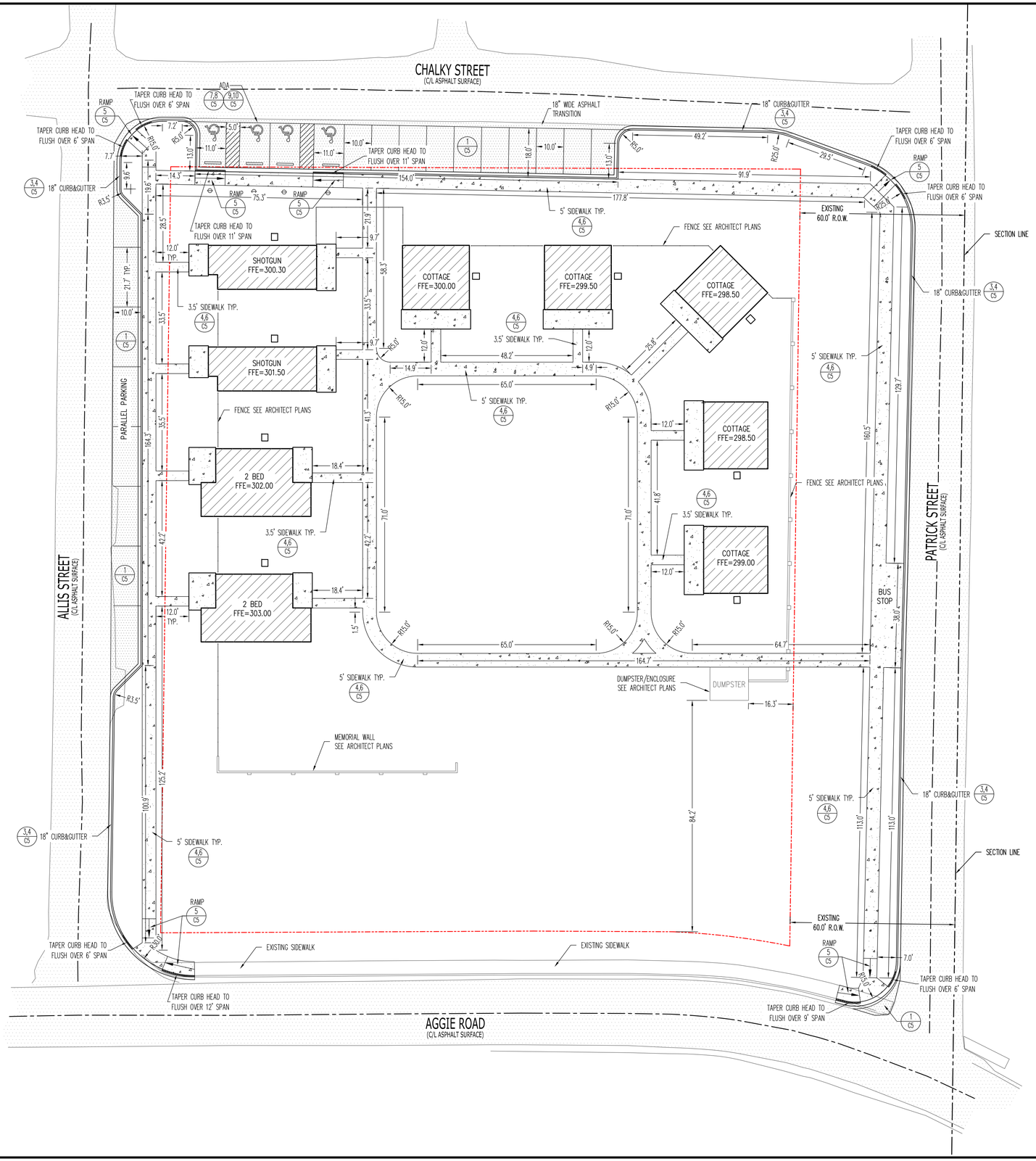

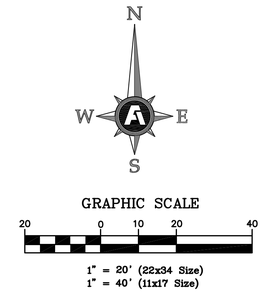

ENGINEERING NOTES:

1. AFTER SITE STRIPPING, THE SUBGRADE WILL BE SCARIFIED, MOISTURE CONDITIONED, & RECOMPACTED. THE PROJECT AREA WILL BE PROOF-ROLLED IN ORDER TO IDENTIFY SOFT SOILS BEFORE FILL MATERIALS ARE PLACED.
2. ALL SOIL FILL (PI 5-20) SHALL BE PLACED IN 8" MAXIMUM LIFTS AND COMPACTED TO 95% MODIFIED PROCTOR.
3. CONTRACTOR IS RESPONSIBLE FOR INSTALLING AND MAINTAINING ADEQUATE EROSION/SEDIMENTATION CONTROL DURING ALL PHASES OF CONSTRUCTION.
4. CONTRACTOR IS RESPONSIBLE FOR KEEPING MUD AND DEBRIS OFF CITY STREETS AND OFF OF PAVED DRIVEWAYS WHERE APPLICABLE. CLEAN UP IS REQUIRED DAILY.
5. CONTRACTOR IS RESPONSIBLE FOR THE REPLACEMENT OF SIDEWALK, CURB AND GUTTER AND/OR ASPHALT/CONCRETE DAMAGED DURING CONSTRUCTION.
6. DEVIATION FROM ENGINEERING DESIGN PLANS IS NOT PERMITTED. ANY CHANGE IN THE CONSTRUCTION DOCUMENTS THAT ARE NOT APPROVED BY THE ENGINEER WILL RESULT IN CONSTRUCTION TERMINATION UNTIL A RESOLUTION IS MET. MODIFICATION NEEDED TO UPDATE DESIGN PLANS WILL RESULT IN DESIGN EXPENSES FOR THE CONTRACTOR.
7. CONTRACTOR SHALL NOTIFY THE ENGINEER AND OWNER/DEVELOPER OF ANY INFORMATION FOUND IN THE FIELD THAT IS DIFFERENT FROM WHAT IS SHOWN ON THESE DESIGN PLANS.
8. ALL DISTURBED AREAS ARE TO BE STABILIZED WITH SOD UPON COMPLETION OF EARTHWORK (SEE SPECIFICATION).
9. CONTRACTOR IS RESPONSIBLE FOR ALL CITY, STATE, OR FEDERAL PERMIT FEES ASSOCIATED WITH CONSTRUCTION.

SITE PLAN

FISHER ARNOLD
ENGINEERS | ARCHITECTS | CONSULTANTS | PLANNERS
1801 Latourette Drive | Jonesboro, Arkansas 72404
870.932.2019 | Fax: 870.932.1076 | www.fisherarnold.com

SITE PLAN

PERMIT SET
VETERANS VILLAGE
CRAIGHEAD COUNTY, JONESBORO, ARKANSAS

STATE OF ARKANSAS
REGISTERED PROFESSIONAL ENGINEER
No. 13420
JEREMY A. BEVILL
03/06/2020
seal

JEREMY A. BEVILL – CIVIL ENGINEER
ARKANSAS – PE # 13420

CERTIFICATE OF AUTHORIZATION
FISHER & ARNOLD INC.
No. 248
ARKANSAS
coa

FISHER & ARNOLD, INC.
ARKANSAS – 248

CLIENT:
COOPER MIXON

COPYRIGHT 2020, ALL RIGHTS RESERVED

REVISIONS

DATE	BY	DESCRIPTION

PROJECT NO.
COOPERMX.0001JB

DRAWN BY	CHECKED BY
DK	JAB
SHEET	SCALE
C1	1"=20'
DATE	DRAWING NO.
03/06/2020	19-42

SITE PLAN

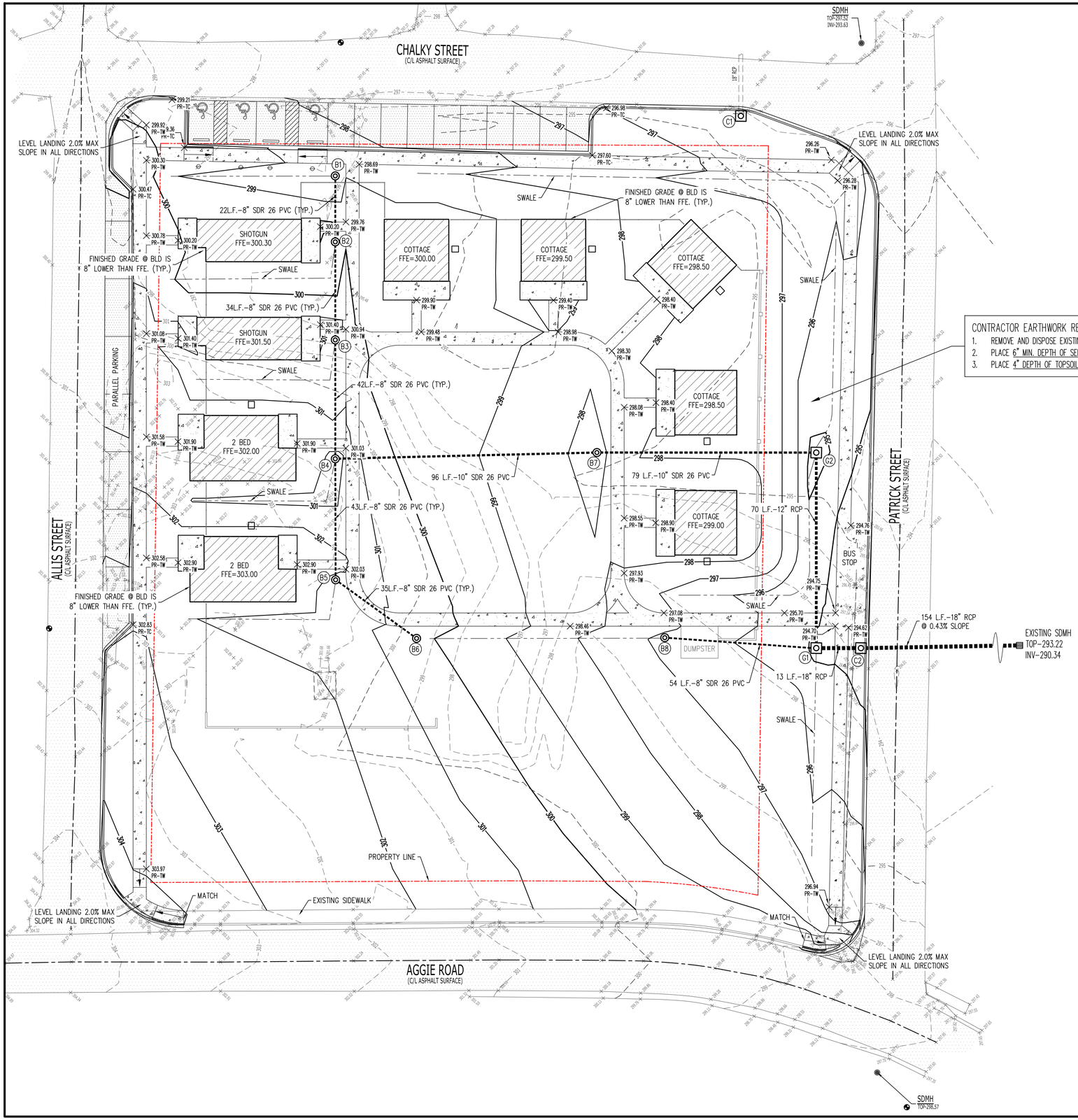

LEGEND:

■■■	PROPOSED PIPE
⊏ ⊐ ⊏	EXISTING PIPE
J-BOX	JUNCTION BOX
C.I.	CURB INLET
G.I.	GRATE INLET
N.I.	NYLOPLAST INLET
RCP	REINFORCED CONCRETE PIPE
FFE	FINISHED FLOOR ELEVATION
PR-TC	PROPOSED TOP OF CURB
PR-TP	PROPOSED TOP OF PAVEMENT
PR-TW	PROPOSED TOP OF WALK
PR-INV	PROPOSED INVERT GRADE
MATCH	MATCH EXISTING GRADE

N
W E
S

GRAPHIC SCALE

20 0 10 20 40

1" = 20' (22x34 Size)
1" = 40' (11x17 Size)

CONTRACTOR EARTHWORK REQUIREMENTS:

1. REMOVE AND DISPOSE EXISTING TOPSOIL AND ORGANICS A MIN. 6" DEPTH FOR ENTIRE SITE.
2. PLACE 6" MIN. DEPTH OF SELECT BORROW MATERIAL (FILL) FOR ENTIRE SITE.
3. PLACE 4" DEPTH OF TOPSOIL ON ALL AREAS TO RECEIVE SOLID SOD.

ENGINEERING NOTES:

1. AFTER SITE STRIPPING, THE SUBGRADE WILL BE SCARIFIED, MOISTURE CONDITIONED, & RECOMPACTED. THE PROJECT AREA WILL BE PROOF-ROLLED IN ORDER TO IDENTIFY SOFT SOILS BEFORE FILL MATERIALS ARE PLACED.
2. ALL SOIL FILL (PI 5-20) SHALL BE PLACED IN 8" MAXIMUM LIFTS AND COMPACTED TO 95% MODIFIED PROCTOR.
3. CONTRACTOR IS RESPONSIBLE FOR INSTALLING AND MAINTAINING ADEQUATE EROSION/SEDIMENTATION CONTROL DURING ALL PHASES OF CONSTRUCTION.
4. CONTRACTOR IS RESPONSIBLE FOR KEEPING MUD AND DEBRIS OFF CITY STREETS AND OFF OF PAVED DRIVEWAYS WHERE APPLICABLE. CLEAN UP IS REQUIRED DAILY.
5. CONTRACTOR IS RESPONSIBLE FOR THE REPLACEMENT OF SIDEWALK, CURB AND GUTTER AND/OR ASPHALT/CONCRETE DAMAGED DURING CONSTRUCTION.
6. DEVIATION FROM ENGINEERING DESIGN PLANS IS NOT PERMITTED. ANY CHANGE IN THE CONSTRUCTION DOCUMENTS THAT ARE NOT APPROVED BY THE ENGINEER WILL RESULT IN CONSTRUCTION TERMINATION UNTIL A RESOLUTION IS MET. MODIFICATION NEEDED TO UPDATE DESIGN PLANS WILL RESULT IN DESIGN EXPENSES FOR THE CONTRACTOR.
7. CONTRACTOR SHALL NOTIFY THE ENGINEER AND OWNER/DEVELOPER OF ANY INFORMATION FOUND IN THE FIELD THAT IS DIFFERENT FROM WHAT IS SHOWN ON THESE DESIGN PLANS.
8. ALL DISTURBED AREAS ARE TO BE STABILIZED WITH SOD UPON COMPLETION OF EARTHWORK (SEE SPECIFICATION).
9. CONTRACTOR IS RESPONSIBLE FOR ALL CITY, STATE, OR FEDERAL PERMIT FEES ASSOCIATED WITH CONSTRUCTION.

STRUCTURE SCHEDULE

STRUCTURE NAME	STRUCTURE TYPE	INVERT ELEV	RIM ELEV	MANUFACTURER DESCRIPTION
C1	CURB INLET	294.16	296.91	4'X4' CURB INLET BOX W/2'x5' REAR OPENING
C2	CURB INLET	291.00	294.40	4'X4' CURB INLET BOX
G1	GRATE INLET	291.10	294.40	4'X4' BOX W/ DEETER # 2230
G2	GRATE INLET	291.50	294.70	4'X4' BOX W/ DEETER # 2230
B1	DRAIN BASIN	295.00	298.00	15" NYLOPLAST INLINE DRAIN W/ STANDARD GRATE
B2	DRAIN INLINE	294.89	299.25	15" NYLOPLAST BASIN DRAIN W/ STANDARD GRATE
B3	DRAIN INLINE	294.72	300.25	15" NYLOPLAST BASIN DRAIN W/ STANDARD GRATE
B4	DRAIN INLINE	294.51	300.70	15" NYLOPLAST INLINE DRAIN W/ STANDARD GRATE
B5	DRAIN BASIN	297.08	301.70	15" NYLOPLAST BASIN DRAIN W/ STANDARD GRATE
B6	DRAIN INLINE	297.25	300.25	15" NYLOPLAST INLINE DRAIN W/ STANDARD GRATE
B7	DRAIN INLINE	292.29	297.58	15" NYLOPLAST INLINE DRAIN W/ STANDARD GRATE
B8	DRAIN INLINE	292.80	296.80	15" NYLOPLAST BASIN DRAIN W/ STANDARD GRATE

GRADING & DRAINAGE PLAN

FISHER ARNOLD
ENGINEERS | ARCHITECTS | CONSULTANTS | PLANNERS
1801 Latourette Drive | Jonesboro, Arkansas 72404
870.932.2019 | Fax: 870.932.1076 | www.fisherarnold.com

GRADING & DRAINAGE PLAN

PERMIT SET
VETERANS VILLAGE
CRAIGHEAD COUNTY, JONESBORO, ARKANSAS

STATE OF ARKANSAS REGISTERED PROFESSIONAL ENGINEER No. 13420 JEREMY A. BEVILL
03/062020
SEED

JEREMY A. BEVILL – CIVIL ENGINEER
ARKANSAS – PE # 13420

CERTIFICATE OF AUTHORIZATION
FISHER & ARNOLD INC.
No. 248
ARKANSAS
COO

FISHER & ARNOLD, INC.
ARKANSAS – 248

CLIENT:
COOPER MIXON

COPYRIGHT 2020, ALL RIGHTS RESERVED

REVISIONS

DATE	BY	DESCRIPTION

PROJECT NO. COOPERMX.0001JB	
DRAWN BY DK	CHECKED BY JAB
SHEET C2	SCALE 1"=20'
DATE 03/06/2020	DRAWING NO. 19-42

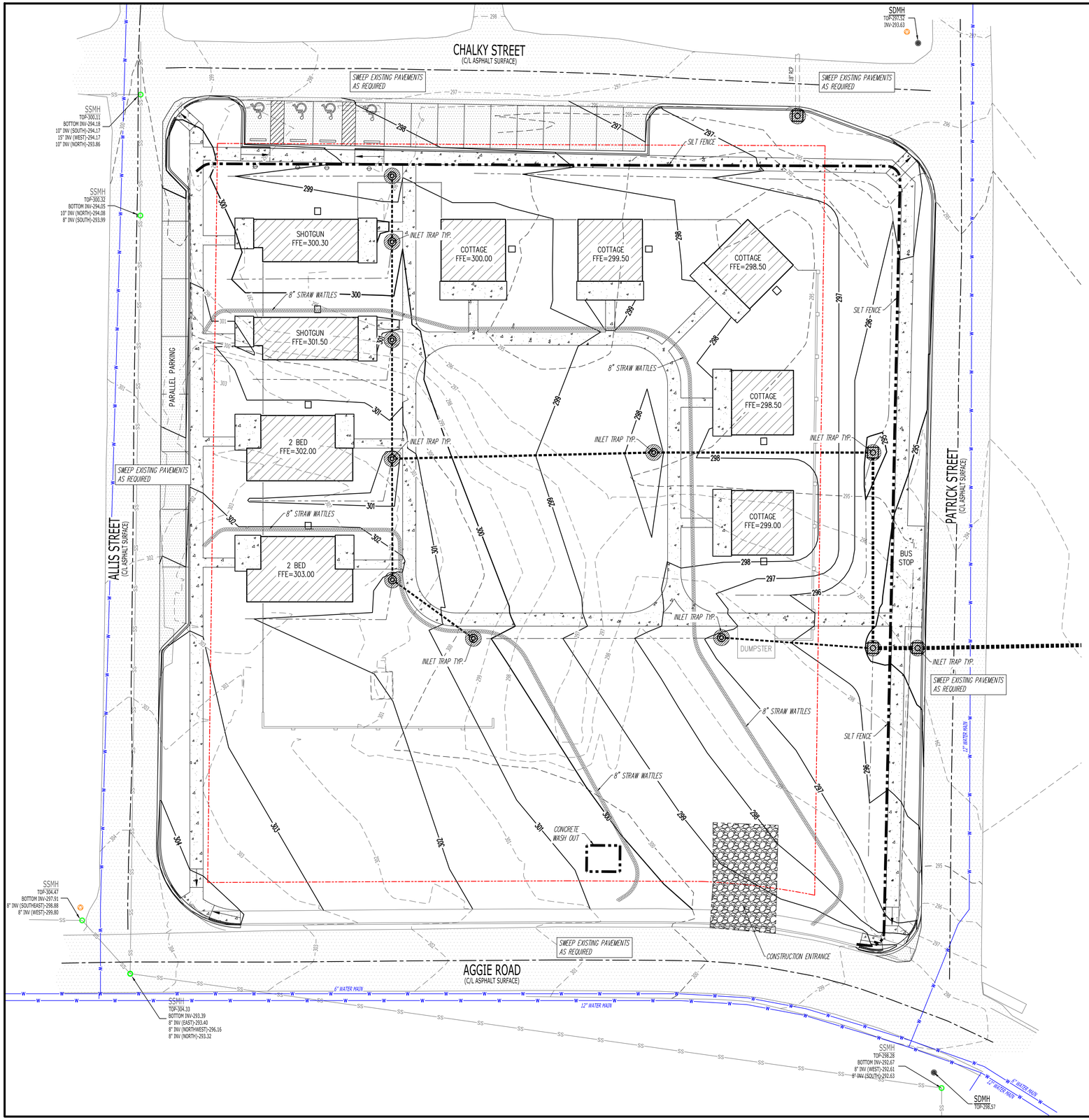

N
W E
S

GRAPHIC SCALE

20 0 10 20 40

1" = 20' (22x34 Size)
1" = 40' (11x17 Size)

GENERAL NOTES:

1. AFTER COMPLETION OF CONSTRUCTION THE NEW RUNOFF COEFFICIENT SHALL BE 0.80.
2. THE STORM WATER POLLUTION PREVENTION MEASURES PRESENTED ON THIS PLAN ARE INTENDED TO MINIMIZE POLLUTANT LOADS OCCURRING IN STORM WATER DISCHARGES, FROM THE CONSTRUCTION SITE. THE CONTROL MEASURES SHALL BE INSTALLED AND MAINTAINED BEYOND THE COMPLETION OF ALL CONSTRUCTION ACTIVITIES AND UNTIL 100% OF THE SITE HAS BEEN STABILIZED.
3. IMPLEMENTATION, INSTALLATION, APPLICATION AND MAINTENANCE OF THE STORM WATER POLLUTION PREVENTION CONTROL MEASURES SHALL BE IN COMPLIANCE WITH APPLICABLE STATE OR LOCAL WASTE DISPOSAL, SANITARY SEWER, OR SEPTIC SYSTEM REGULATIONS.
4. ALL DISTURBED AREAS ARE TO BE STABILIZED.

EROSION AND SEDIMENT CONTROL NOTES:

1. INSTALL EROSION AND SEDIMENT CONTROL MEASURES AND CONSTRUCTION ENTRANCES AT LOCATIONS AS INDICATED ON PLANS PRIOR TO EARTHWORK.
2. ALL EROSION AND SEDIMENT CONTROL MEASURES SHALL BE LOCATED AND MAINTAINED SUCH THAT THE LOCATION DOES NOT INTERFERE WITH CONSTRUCTION ACTIVITIES.
3. CONTRACTOR SHALL BE RESPONSIBLE TO MAINTAIN ALL EROSION AND SEDIMENT CONTROL MEASURES ON SITE AND AT LEAST 20' FROM THE DISTURBED AREAS.

GENERAL NOTES: EROSION BALES

1. DESCRIPTION: STRAW OR HAY EROSION BALES MAY BE USED AS FILTERS ALONG THE TOE OF FILL SLOPES, AS EROSION CHECKS IN DITCHES, AND AS SEDIMENT TRAPS AT INLETS AND OUTLETS. STRAW BALES MAY BE PLACED BELOW FILL SLOPES TO PROTECT ROADS, AND AS ENGERY DISSIPATERS FOR HIGH VELOCITY RUNOFF.
2. CONSTRUCTION: BALES SHALL BE LAID TO MAINTAIN TIGHT JOINTS. EROSION BALES WILL NOT FILTER SEDIMENT OUT OF WATER IF THE WATER IS ALLOWED TO FLOW BETWEEN, AROUND, OR UNDERNEATH THE BALES. THE BALES SHOULD BE ENTRENCHED 6 INCHES AND ANCHORED SECURELY.
3. MAINTENANCE: EROSION BALES REQUIRE FREQUENT INSPECTION AS THEY DETERIORATE QUICKLY AND MAY NEED TO BE REPLACED. WHEN NO LONGER NEEDED, THE ACCUMULATED SEDIMENT SHALL BE SPREAD, SEEDED, AND MULCHED WITH THE EROSION BALES AS APPROVED BY COR.
4. HAY BALES ARE A TEMPORARY MEASURE ONLY. THEY SHALL BE INSTALLED, REPAIRED OR REPLACED AT THE DIRECTION OF COR.

MAINTENANCE AND OPERATION NOTES:

1. AN INSPECTION SHALL BE MADE EVERY 7 DAYS.
2. ALL OBSERVED DEFICIENCIES IN BEST MANAGEMENT PRACTICES (BMP's) WILL BE RECORDED.
3. SEDIMENT SHALL BE REMOVED BEHIND SILT FENCING OR STRAW BALES ONCE SEDIMENT REACHES 1/3 THE HEIGHT OF THE SILT FENCE OR STRAW BALES.

EROSION CONTROL PLAN

FISHER ARNOLD
ENGINEERS | ARCHITECTS | CONSULTANTS | PLANNERS
1801 Latourette Drive | Jonesboro, Arkansas 72404
870.932.2019 | Fax: 870.932.1076 | www.fisherarnold.com

EROSION CONTROL PLAN

PERMIT SET
VETERANS VILLAGE
CRAIGHEAD COUNTY, JONESBORO, ARKANSAS

STATE OF ARKANSAS
REGISTERED PROFESSIONAL ENGINEER
No. 13420
JEREMY A. BEVILL
03/06/2020
seal

JEREMY A. BEVILL – CIVIL ENGINEER
ARKANSAS – PE # 13420

CERTIFICATE OF AUTHORIZATION
FISHER & ARNOLD INC.
No. 248
ARKANSAS
coa

FISHER & ARNOLD, INC.
ARKANSAS – 248

CLIENT:
COOPER MIXON

COPYRIGHT 2020, ALL RIGHTS RESERVED

REVISIONS

DATE	BY	DESCRIPTION

PROJECT NO.
COOPERMX.0001JB

DRAWN BY	CHECKED BY
DK	JAB
SHEET	SCALE
C3	1"=20'
DATE	DRAWING NO.
03/06/2020	19-42

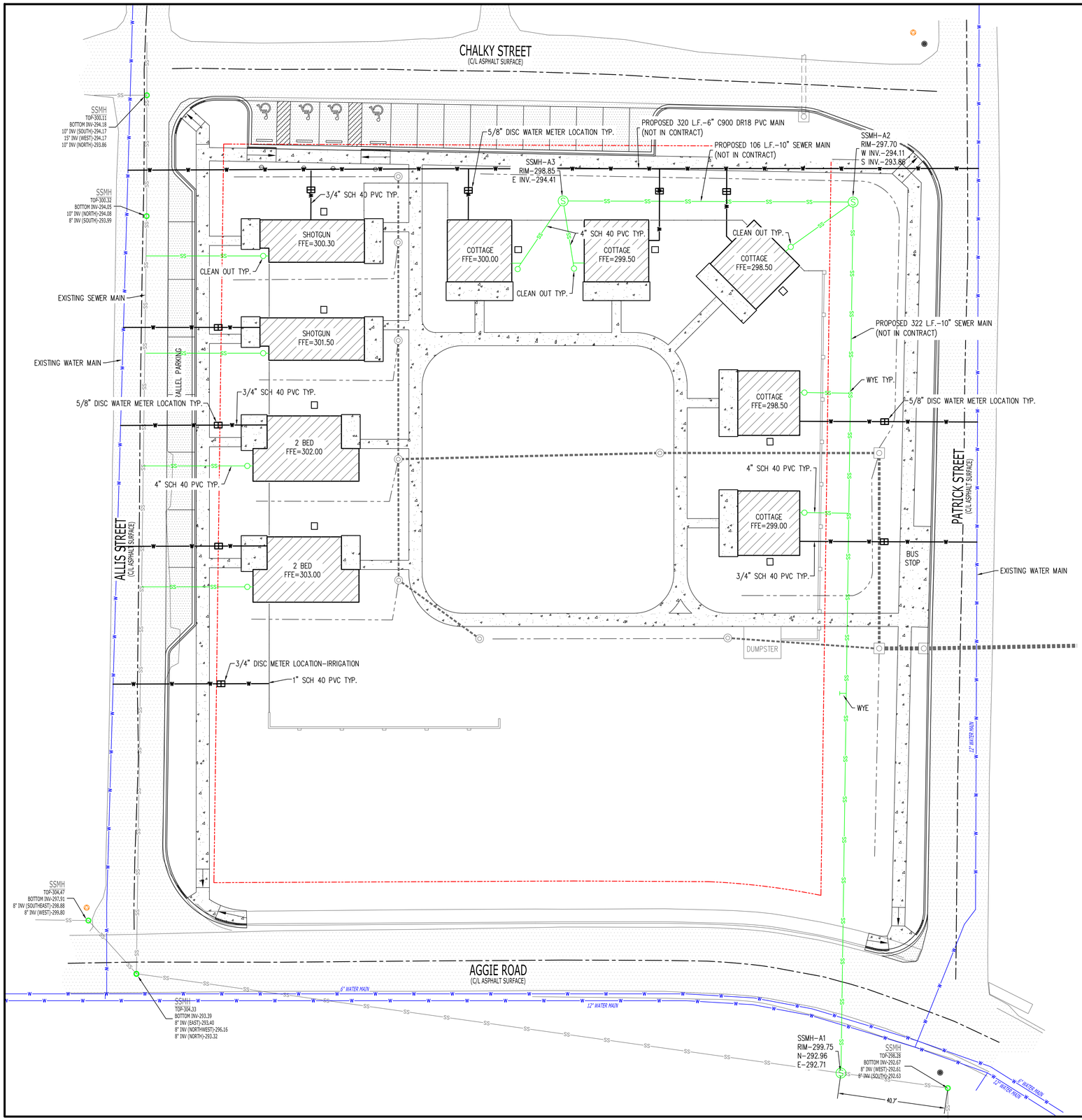

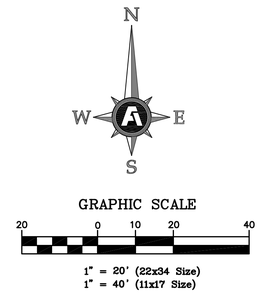

UTILITY CONTRACTOR NOTES:

1. WATER MAINS CROSSING SEWERS SHALL BE LAID TO PROVIDE A MINIMUM VERTICAL DISTANCE OF 18" BETWEEN THE OUTSIDE OF THE WATER MAIN AND THE OUTSIDE OF THE SEWER. THIS SHALL BE THE CASE WHERE THE WATER MAIN IS EITHER ABOVE OR BELOW THE SEWER WITH PREFERENCE TO THE WATER MAIN LOCATED ABOVE THE SEWER.
2. AT CROSSINGS, ONE FULL LENGTH OF WATER PIPE SHALL BE LOCATED SO BOTH JOINTS WILL BE AS FAR FROM THE SEWER AS POSSIBLE. SPECIAL STRUCTURAL SUPPORT FOR THE WATER AND SEWER PIPES MAY BE REQUIRED.
3. UTILITY CONTRACTOR IS RESPONSIBLE FOR THE INTEGRITY OF UTILITY STREET CROSSING, WHICH INCLUDES ALL WATER AND SEWER MAINS AND WATER AND SEWER SERVICES.
4. FLOWABLE FILL IS TO BE USED AS BACKFILL WHERE THE WATER MAIN AND SEWER MAIN CROSSES THE STREET AND ALL SEWER SERVICES THAT ARE IN THE STREET.
5. ALL LONG WATER SERVICES ARE TO BE BACKFILLED WITH EITHER FLOWABLE FILL, COMPACTED SAND, OR COMPACTED ¾" MINUS LIMESTONE.
6. SANITARY SEWER LENGTHS ARE FROM THE CENTER OF THE SSMH.
7. NO TRANSFORMERS, JUNCTION BOXES, OR PULL BOXES TO BE PLACED OVER WATER FITTINGS.
8. CITY WATER & LIGHT IS NOT RESPONSIBLE FOR ANY WATER OR SEWER TRENCH SETTLEMENT BEFORE OR AFTER WARRANTY PERIOD
9. THE DEVELOPER & ENGINEER ARE RESPONSIBLE FOR METER BOX LOCATIONS. ANY CONFLICTS THAT REQUIRE PLASTIC BOX(S) TO BE CHANGED OUT TO CONCRETE BOX(S) WILL BE AT THE DEVELOPER OR ENGINEERS EXPENSE
10. IF UNSAFE PRACTICES ARE DISCOVERED BY CWL DURING OUR INSPECTIONS OF WORKMANSHIP AND MATERIALS, CWL WILL NOTIFY THE OSHA. THIS IN NO WAY OBLIGATES CWL FOR THE RESPONSIBILITY OF THE CONTRACTORS SAFETY PRACTICES.

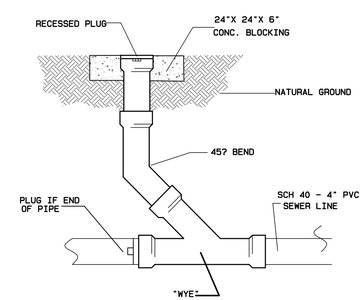

CLEAN OUT DETAIL

N.T.S.

UTILITY PLAN

FISHER ARNOLD
ENGINEERS | ARCHITECTS | CONSULTANTS | PLANNERS
1801 Latourette Drive | Jonesboro, Arkansas 72404
870.932.2019 | Fax: 870.932.1076 | www.fisherarnold.com

PERMIT SET
VETERANS VILLAGE
CRAIGHEAD COUNTY, JONESBORO, ARKANSAS

STATE OF ARKANSAS
REGISTERED PROFESSIONAL ENGINEER
No. 13420
JEREMY A. BEVILL
03/06/2020
seal

JEREMY A. BEVILL – CIVIL ENGINEER
ARKANSAS – PE # 13420

CERTIFICATE OF AUTHORIZATION
FISHER & ARNOLD INC.
No. 248
ARKANSAS
coa

FISHER & ARNOLD, INC.
ARKANSAS – 248

CLIENT:
COOPER MIXON

COPYRIGHT 2020, ALL RIGHTS RESERVED

REVISIONS

DATE	BY	DESCRIPTION

PROJECT NO.
COOPERMX.0001JB

DRAWN BY	CHECKED BY
DK	JAB
SHEET	SCALE
C4	1"=20'
DATE	DRAWING NO.
03/06/2020	19-42

UTILITY PLAN

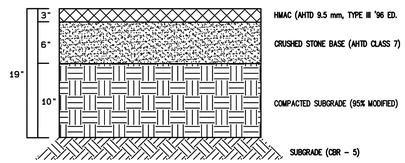

1 N.T.S. LIGHT DUTY ASPHALT PAVING

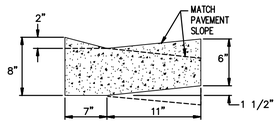

NOTE: CONTRACTION AND EXPANSION JOINTS SHALL BE CONSTRUCTED IN ACCORDANCE WITH THE PLANS AND SPECIFICATIONS.

2 N.T.S. DEPRESSED CURB & GUTTER

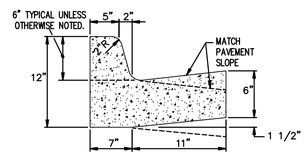

TYPE "A" (BARRIER) RESIDENTIAL & COLLECTOR STREETS

NOTE: CONTRACTION AND EXPANSION JOINTS SHALL BE CONSTRUCTED IN ACCORDANCE WITH THE PLANS AND SPECIFICATIONS.

3 N.T.S. BARRIER TYPE CURB & GUTTER

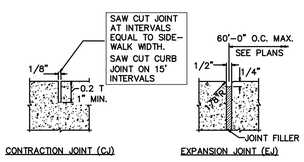

NOTE: PROVIDE EXPANSION JOINT WHERE CURB ABUTTS STRUCTURES. PROVIDE EXPANSION JOINT WHERE SIDEWALK ABUTTS CURB AND NEXT TO STRUCTURES AND DRIVEWAYS. USE SELF LEVELING SEALANT ON ALL JOINTS

4 N.T.S. JOINTS FOR CURB & WALKS

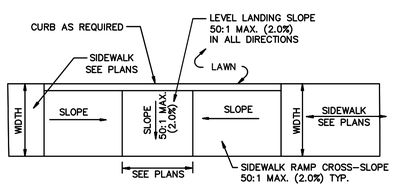

5 N.T.S. SIDEWALK RAMP DETAIL

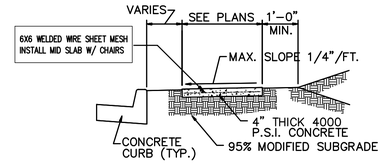

6 N.T.S. 4" SIDEWALK CROSS SECTION

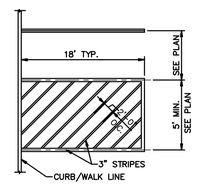

7 N.T.S. TYPICAL STRIPING DETAIL

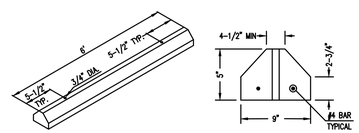

8 N.T.S. WHEEL STOP DETAIL

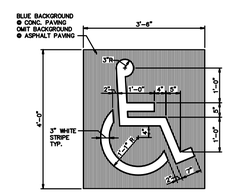

9 N.T.S. PARKING STALL SYMBOL

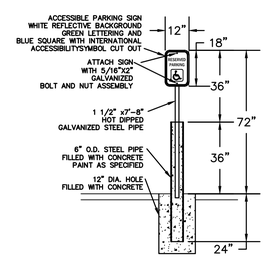

NOTE: SIGN MAY BE ATTACHED TO COLUMN OR BUILDING

10 N.T.S. ACCESSIBLE SIGN DETAIL

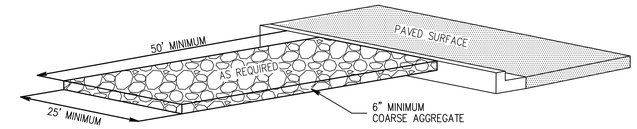

CONSTRUCTION ENTRANCE DETAIL

N.T.S.

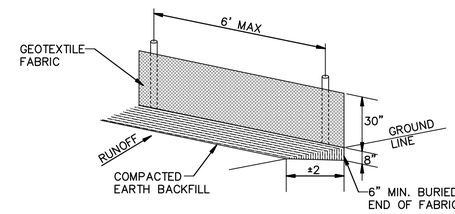

GEOTEXTILE FABRIC SHALL BE SPLICED TOGETHER WITH A SEWN SEAM ONLY AT A SUPPORT POST, OR TWO SECTIONS OF FENCE MAY BE OVERLAPPED INSTEAD. PAYMENT OF ADDITIONAL MATERIAL FOR OVERLAP WILL NOT BE MADE.

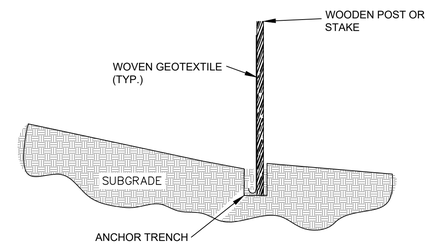

NOTES:
1. GEOTEXTILE ANCHORED IN TRENCH A MINIMUM OF 15 CM (6 IN). TRENCH BACKFILLED WITH TAMPED NATURAL SOIL.
2. DEPENDING UPON CONFIGURATION, ATTACH GEOTEXTILE TO STEEL POST WITH TIE WIRES OR WOOD POSTS WITH STAPLES.

SILT FENCE DETAIL

N.T.S.

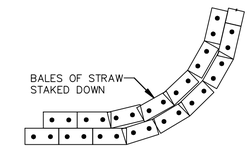

DOUBLE ROW OF BALES OF STRAW TO BE PLACED PRIOR TO THE START OF ROUGH GRADING. BALES ARE TO BE PLACED AS COLOSELY TOGETHER AS POSSIBLE IN ORDER TO PROVIDE MAXIMUM PROTECTION.

PLAIN VIEW

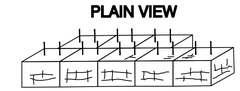

ISOMETRIC

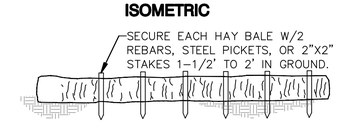

TEMPORARY SEDIMENT BARRIER

NOTES:
WIRE OR NYLON BOUND BALES ARE REQUIRED FOR DURABILITY.

REQUIRED AT LOW AREAS OF SITE WHERE SURFACE DRAINAGE OCCURES DURING GRADING OPERATIONS & PRIOR TO LANDSCAPING COMPLETION.

STRAW BALE DETAILS

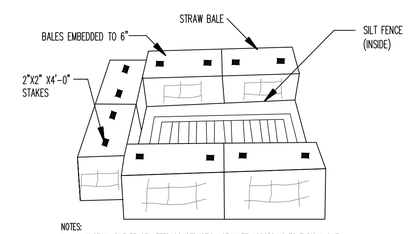

NOTES:
1. INSTALL SILT FENCE AFTER CONSTRUCTION OF INLET ACCORDING TO TYPICAL SILT FENCE DETAIL.
2. INSTALL STRAW BALES OUTSIDE OF SILT FENCE CCORDING TO THE TYPICAL STRAW BALE DETAIL.

INLET TRAP DETAILS

N.T.S.

EROSION CONTROL DETAILS

CONSTRUCTION DETAILS

FISHER ARNOLD
ENGINEERS | ARCHITECTS | CONSULTANTS | PLANNERS
1801 Latourette Drive | Jonesboro, Arkansas 72404
870.932.2019 | Fax: 870.932.1076 | www.fisherarnold.com

CONSTRUCTION DETAILS

PERMIT SET
VETERANS VILLAGE
CRAIGHEAD COUNTY, JONESBORO, ARKANSAS

STATE OF ARKANSAS REGISTERED PROFESSIONAL ENGINEER No. 13420 JEREMY A. BEVILL
03/06/2020
seal

JEREMY A. BEVILL – CIVIL ENGINEER
ARKANSAS – PE # 13420

CERTIFICATE OF AUTHORIZATION FISHER & ARNOLD INC. No. 248 ARKANSAS
coa

FISHER & ARNOLD, INC.
ARKANSAS – 248

CLIENT:
COOPER MIXON

COPYRIGHT 2020, ALL RIGHTS RESERVED

REVISIONS

DATE	BY	DESCRIPTION

PROJECT NO. COOPERMX.0001JB	
DRAWN BY DK	CHECKED BY JAB
SHEET C5	SCALE N.T.S.
DATE 03/06/2020	DRAWING NO. 19-42

*(1) ADAPTERS CAN BE MOUNTED ON ANY ANGLE 0° TO 359°. TO DETERMINE MINIMUM ANGLE BETWEEN ADAPTERS SEE DRAWING NO. 7001-110-012.

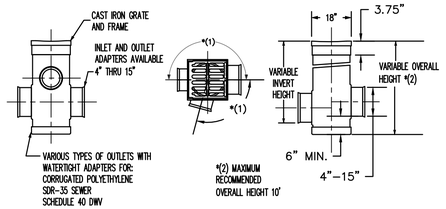

TYPICAL 15" NYLOPLAST DRAIN BASIN

1 N.T.S.

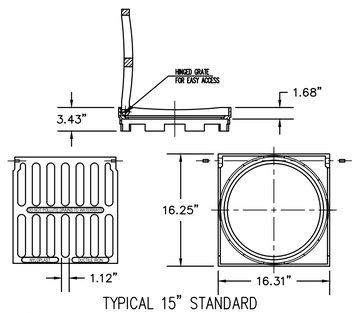

TYPICAL 15" STANDARD NYLOPLAST GATE

2 N.T.S.

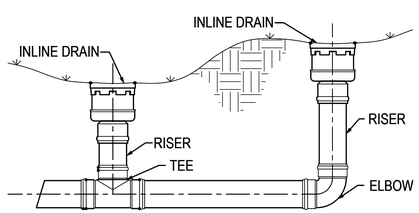

TYPICAL INLINE DRAIN INSTALLATION

3 N.T.S.

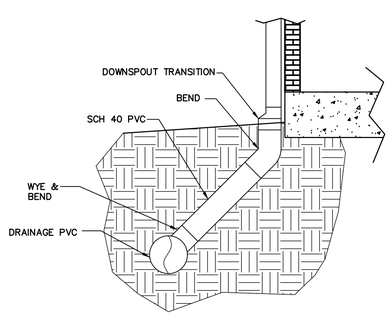

DOWNSPOUT STORM DRAIN CONNECTION DETAIL

4 N.T.S.

NOTE:
(1) EXCAVATED MATERIAL SHALL BE REMOVED AND DISPOSED OF BY THE CONTRACTOR
(2) THIS REPAIR DETAIL IS REQUIRED FOR ALL EXCAVATION WITHIN 5' OF PAVED EDGE AND ALL TRANSVERSE EXCAVATIONS TO EXTEND 3' BEYOND PAVED EDGE.

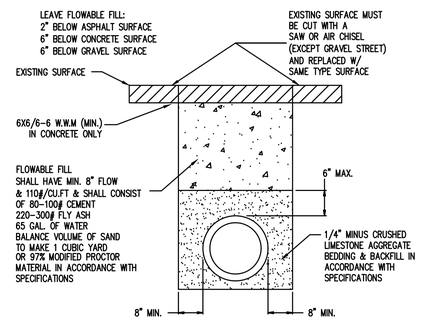

PIPE TRENCH DETAIL AT EXISTING STREET OR PROPOSED PAVING

5 N.T.S.

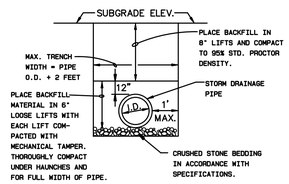

DRAINAGE/SEWER PIPE TRENCH DETAIL AT LAWN/LANDSCAPE AREAS

6 N.T.S.

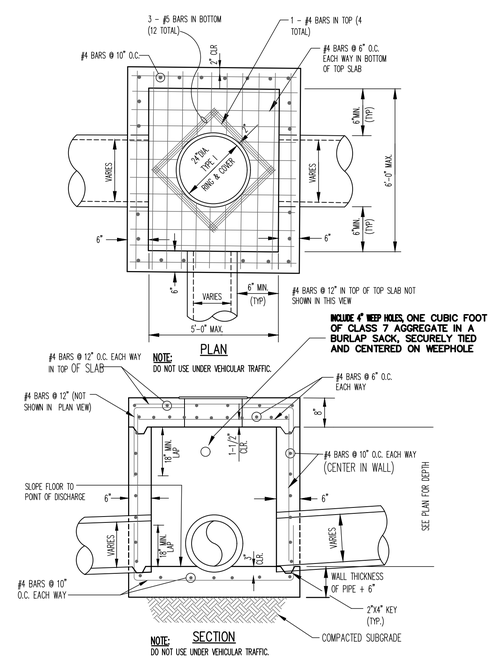

TYPICAL GRATE INLET

7 N.T.S.

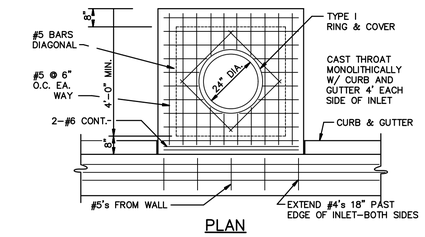

PLAN

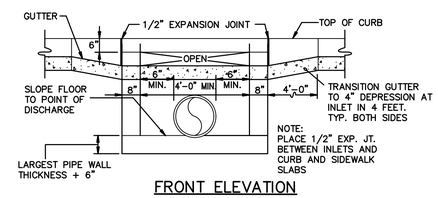

FRONT ELEVATION

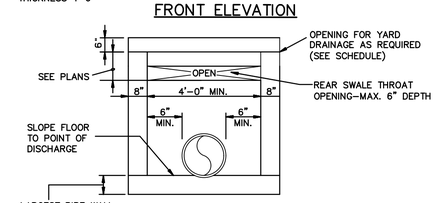

REAR ELEVATION

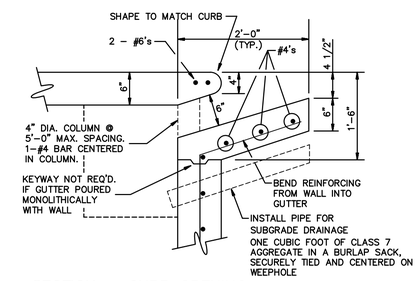

SECTION – CURB OPENING

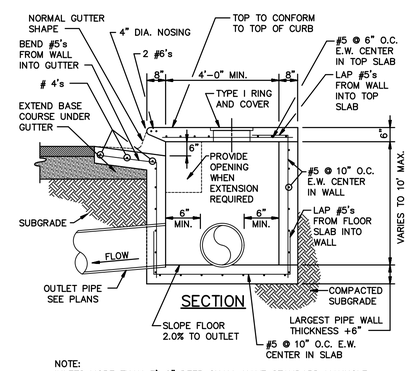

NOTE:
INLETS MORE THAN 3'-0" DEEP SHALL HAVE STANDARD MANHOLE STEPS PLACED AT 15" O.C. – MANHOLE FRAME AND COVER SHALL BE PLACED ADJACENT TO THE WALL WITH THE STEPS.

TYPICAL CURB INLET

8 N.T.S.

CONSTRUCTION DETAILS

FISHER ARNOLD
ENGINEERS | ARCHITECTS | CONSULTANTS | PLANNERS
1801 Latourette Drive | Jonesboro, Arkansas 72404
870.932.2019 | Fax: 870.932.1076 | www.fisherarnold.com

CONSTRUCTION DETAILS

PERMIT SET
VETERANS VILLAGE
CRAIGHEAD COUNTY, JONESBORO, ARKANSAS

STATE OF ARKANSAS REGISTERED PROFESSIONAL ENGINEER No. 13420 JEREMY A. BEVILL
03/06/2020
seal

JEREMY A. BEVILL – CIVIL ENGINEER
ARKANSAS – PE # 13420

CERTIFICATE OF AUTHORIZATION FISHER & ARNOLD INC. No. 248 ARKANSAS
coa

FISHER & ARNOLD, INC.
ARKANSAS – 248

CLIENT:
COOPER MIXON

COPYRIGHT 2020, ALL RIGHTS RESERVED

REVISIONS

DATE	BY	DESCRIPTION

PROJECT NO.
COOPERMX.0001JB

DRAWN BY	CHECKED BY
DK	JAB
SHEET	SCALE
C6	N.T.S.
DATE	DRAWING NO.
03/06/2020	19-42

ELECTRICAL SYMBOL SCHEDULE

1. SEE FIXTURE SCHEDULE FOR TYPE, MOUNTING, AND WATTAGE.
2. HEIGHT SHOWN IS TO BOTTOM OF DEVICE.
3. HEIGHT TO BE 42" ABOVE FINISHED FLOOR (AFF) IF MOUNTED ABOVE A COUNTER.
4. EMERGENCY LIGHTING & EXIT SIGNS SHALL HAVE A NON-SWITCHED CONDUCTOR.
5. PROVIDED BY OTHERS. ELECTRICAL CONTRACTOR TO PROVIDE BOXES & CONDUIT ONLY.
6. DOUBLE ARROWS DENOTE A DOUBLE FACE UNIT.
7. OR AS NOTED

STANDARD MOUNTINGS HEIGHT UNLESS NOTED OTHERWISE ON PLANS.

SYMBOL	DESCRIPTION	MOUNTING HEIGHT	NOTES
	BRANCH CIRCUIT. PANEL & CIRCUIT NUMBER INDICATED		
	WALL LIGHT OUTLET	AS NOTED	1.
	RECESSED CAN LIGHT	CEILING	1.
	SURFACE MOUNT LIGHT	CEILING	1.
	FLUORESCENT LIGHT FIXTURE	AS NOTED	1.
	FLUORESCENT LIGHT WITH EMERGENCY LIGHTING	AS NOTED	1,
	EXIT SIGN (ARROW INDICATES DIRECTION)	UNIVERSAL	1. 4. 6.
	EXIT SIGN WITH EMERGENCY LIGHTING	UNIVERSAL	1. 4. 6.
	EMERGENCY LIGHTING	WALL	4.
$	SINGLE POLE SWITCH	4' AFF	2. 3.
$3	THREE-WAY SWITCH	4' AFF	2. 3.
$4	FOUR-WAY SWITCH	4' AFF	2. 3.
$OC	SWITCH W/ OCCUPANT SENSOR	4' AFF	2. 3.
	DUPLEX RECEPTACLE	18" AFF	2. 3. 7.
WP	WEATHERPROOF RECEPTACLE	18" AFF	2. 3. 7.
GFCI	GROUND FAULT RECEPTACLE	VARIES	2. 3. 7.
	2 POLE RECEPTACLE	VARIES	2. 3. 7.
D	COMBINATION VOICE & DATA RECEPTACLE	18"AFF	2. 3. 7.
TV	TV OUTLET	18" AFF	2. 3. 7.
	TELEPHONE OUTLET	18" AFF	2. 3. 7.
J	JUNCTION BOX	AS NOTED	
T	THERMOSTAT	54" AFF	
M	MOTOR		
PE	PHOTO-EYE CONTROL	AS NOTED	
	PUSHBUTTON	54" AFF	
	DISCONNECT SWITCH	4' AFF	2. 7.
	PANELBOARD	TOP AT 6' AFF	
OS	OCCUPANT SENSOR	CEILING	
PP	POWER PACK	CEILING	
SP	SLAVE PACK	CEILING	
SD	SMOKE DETECTOR	CEILING	
SD	DUCT MOUNTED SMOKE DETECTOR	VARIES	5.
HD	HEAT DETECTOR	CEILING	5.
	FIRE ALARM MANUAL PULL STATION	4' AFF	5.
75	FIRE ALARM AUDIBLE & VISUAL DEVICE w/ CANDELA RATING	80" AFF	5.
75	FIRE ALARN STROBE ONLY w/CANDELA STROBE RATING	80" AFF	5.

GENERAL NOTES:

1. Workmanship shall comply with 2017 National Electric Code & all other state & local codes.
2. Coordinate all work with other trades.
3. Electrical contractor to make all final electrical connections to electrical & mechanical equipment.
4. These drawings are diagrammatic in nature. The electrical contractor shall include all needed fittings, couplings, offsets, changes in directions, etc needed for a complete & operational systems.
5. All wiring shall be routed concealed. All feeders & branch circuits shall have a ground wire, sized per NEC.

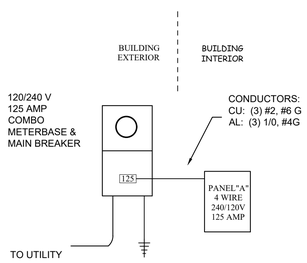

1 ELECTRICAL RISER
NTS

ELECTRICAL FIXTURE SCHEDULE

ITEM	*DESCRIPTION*	*MANUFACTURE*	*PART NUMBER*	*VOLTS*	*LAMPS*	*MOUNT*	*REMARKS*
A	LED DISK LIGHT	CANARM	LED-SM6DL-WT-C2	120	(1) LED: 1000 LUMEN, 15 WATTS, 4000K COLOR, INCLUDED	SURFACE	6" White trim
B	KITCHEN UNDERCABINET	LITHONIA	UCLD 24IN 30K	120	(2) 13 WATT LED, 3000K COLOR, INCLUDED	SURFACE	Verify length to fit cabinets
CF	CEILING FAN & LIHGT	MINKA AIRE	F556L-WL	120	(1) LED: 17 WATTS, 4000K COLOR,	CEILING	White / whitewash blades, single light kit. 52" diameter, 5 blades
D	VANITY LIGHT	WESTINGHOUSE	63438B	120	(3) LED: 9 WATTS, 4000K COLOR,	WALL	Chrome,with white linen glass
E	KITCHEN UNDERCABINET	LITHONIA	UCLD 24IN 30K	120	(2) 13 WATT LED, 3000K COLOR, INCLUDED	SURFACE	Verify length to fit cabinets
PL	POLE LIGHT	LITHONIA	RSX1P440KR3	240	(1) 133 WATT LED, 4000K COLOR, INCLUDED	GROUND	Single light, with photo cell. Provide 3.5" square, 30' Pole. Dark bronze.

VETERANS' VILLAGE
CITY OF JONESBORO
AGGIE ROAD, JONESBORO, ARKANSAS

REGARDING THE SENSITIVE ISSUES OF CONFIDENTIALITY AND COPYRIGHT, ANY REQUEST FOR THE RELEASE , OR REPRODUCTION OF THESE DRAWINGS MUST BE APPROVED BY COOPER MIXON ARCHITECTS PLLC

STATE OF ARKANSAS
LICENSED PROFESSIONAL ENGINEER
No. 12041
JEFFERY TODD SINGLETON
3/1/2020

COOPER MIXON architects
505 union street, 2nd flr
jonesboro, ar 72401
phone:870.336.0555
www.coopermixon.com

CONSTRUCTION DOCUMENTS

PROJECT NO.
1805

PROJECT NAME
VETERANS' VILLAGE

DATE
2020-2-11

CONTENTS
ELECTRICAL PLAN: GENERAL NOTES, DETAILS, & SCHEDULES

SHEET NUMBER
E-1

2/11/2020 2:22:09 PM

PANEL "A" **VOLTAGE:** 120/240 1 PHASE **AIC RTG:** 10K
AMPACITY: 125 MAIN LUG **MOUNT:** FLUSH
SPACE: 30

#	NAME	A	B	TRIP	TYPE	POLE	POLE	TYPE	TRIP	A	B	NAME	#
1	REC - BEDROOM	1260		20	A	1	2		50	4000		AIR HANDLER	2
3	BATHROOM		180	20	C	1			50		4000	"	4
5	WASHER	360		20	C	1	2		30	1500		CONDENSOR	6
7	REC - LIVNG ROOM		1080	20	A	1			30		1500	"	8
9	REC - KIT	180		20	C	1	2		40	4000		RANGE	10
11	REC - KIT		360	20	C	1			40		4000	"	12
13	LIGHTS	200		20	A	1	2		30	2250		WATER HEATER	14
15	EXTERIOR REC		540	20	C	1			30		2250	"	16
17	REFG	500		20	C	1	2		30	2500		DRYER	18
19	VENT HOOD		500	20		1			30		2500	"	20
21	DISHWASHER	300		20	C	1							22
23													24
25													26
27													28
29													30
		2800	2660							14250	14250		

PHASE A	17050			TYPE
PHASE B	16910	***TOTAL LOAD***	***33 KVA***	A ARC FAULT
	33960	***CONNECTED***	***140 AMPS***	B GROUND FAULT
				C COMBO ARC FAULT & GROUND FAULT

KEYED NOTES:

1. Building only requires (1) meterbase & main disconnect. The 2 locations shown are optional locations. Location will be determined by building & lot location. Coordinate with utility & refer to site plan for proper placement.

2. Panelboard location is determined by exterior meterbase & main breaker location. See electrical site plan (E-1D) for which side meterbase is located. Locate interior panelboard "back-to-back" with the meterbase.

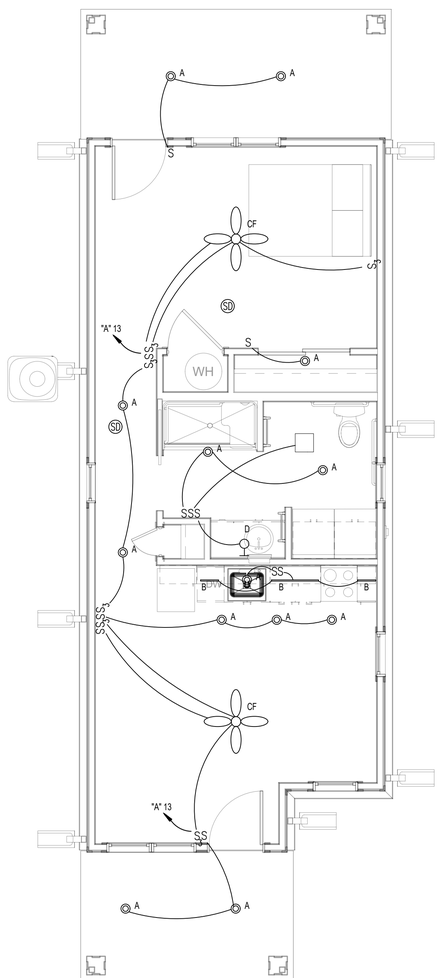

1 LIGHTING PLAN
1/4" = 1'-0"

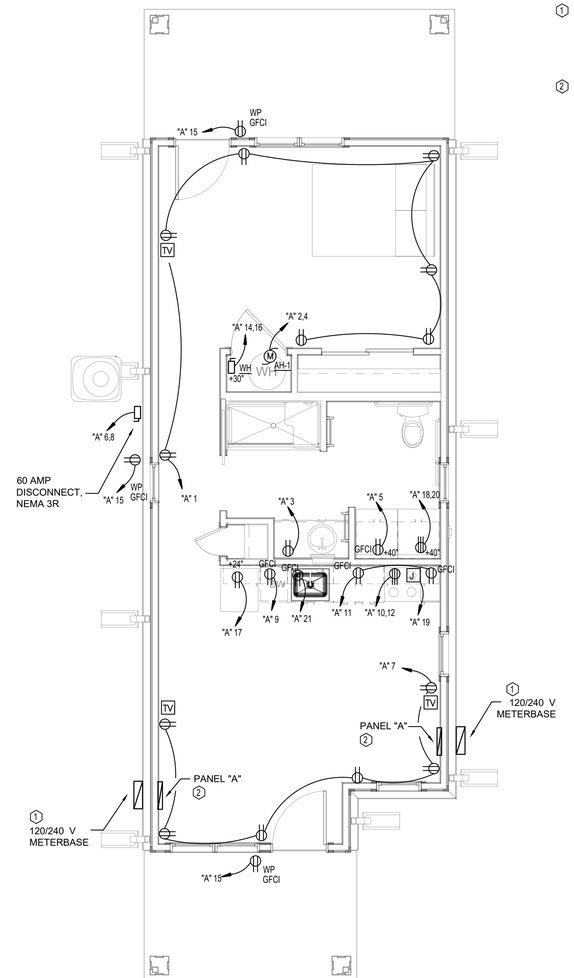

2 POWER PLAN
1/4" = 1'-0"

VETERANS' VILLAGE- 1 BED
CITY OF JONESBORO

AGGIE ROAD, JONESBORO, ARKANSAS

REGARDING THE SENSITIVE ISSUES OF CONFIDENTIALITY AND COPYRIGHT, ANY REQUEST FOR THE RELEASE, OR REPRODUCTION OF THESE DRAWINGS MUST BE APPROVED BY COOPER MIXON ARCHITECTS PLLC

STATE OF ARKANSAS
LICENSED PROFESSIONAL ENGINEER
No. 12041
JEFFERY TODD SINGLETON
3/1/2020

COOPER MIXON architects
505 union street, 2nd fl jonesboro, ar 72401
phone 870.336.0536 www.coopermixon.com

CONSTRUCTION DOCUMENTS

PROJECT NO.
1805

PROJECT NAME
VETERANS' VILLAGE

DATE
2020-2-11

CONTENTS
ELECTRICAL PLAN,

SHEET NUMBER
E-1A

2/11/2020 2:22:09 PM

KEYED NOTES:

1. Building only requires (1) meterbase & main disconnect. The 2 locations shown are optional locations. Location will be determined by building & lot location. Coordinate with utility & refer to site plan for proper placement.

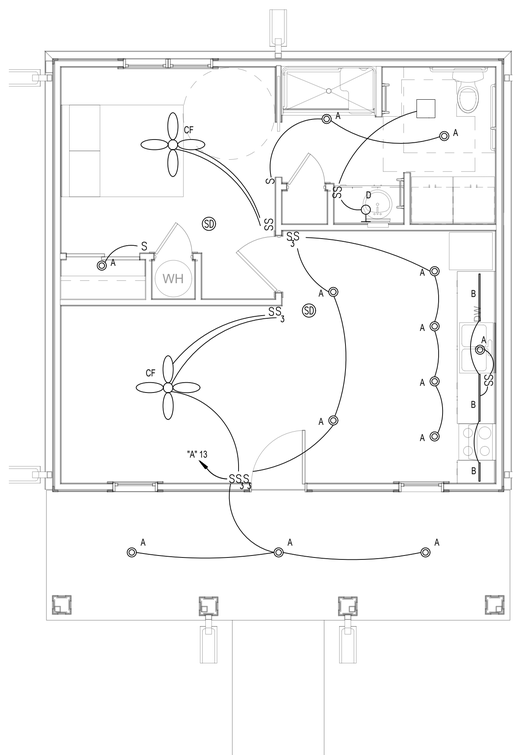

1 LIGHTING PLAN
1/4" = 1'-0"

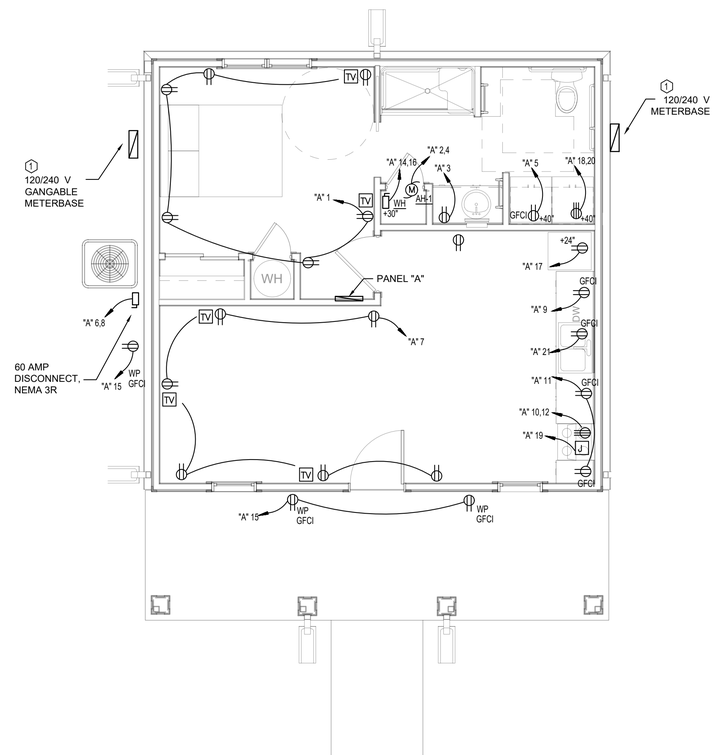

2 POWER PLAN
1/4" = 1'-0"

VETERANS' VILLAGE - COTTAGE
CITY OF JONESBORO

AGGIE ROAD, JONESBORO, ARKANSAS

REGARDING THE SENSITIVE ISSUES OF CONFIDENTIALITY AND COPYRIGHT, ANY REQUEST FOR THE RELEASE , OR REPRODUCTION OF THESE DRAWINGS MUST BE APPROVED BY COOPER MIXON ARCHITECTS PLLC

STATE OF ARKANSAS
LICENSED PROFESSIONAL ENGINEER
No. 12041
JEFFERY TODD SINGLETON
3/1/2020

COOPER MIXON architects
505 union street, 2nd flr jonesboro, ar 72401
phone 870.336.0026 www.coopermixon.com

CONSTRUCTION DOCUMENTS

PROJECT NO.
1805

PROJECT NAME
VETERANS' VILLAGE

DATE
2020-2-11

CONTENTS
ELECTRICAL PLAN,

SHEET NUMBER
E-1B

2/11/2020 2:22:09 PM

PANEL "B" **VOLTAGE:** 120/240 1 PHASE **AIC RTG:** 10K
AMPACITY: 125 MAIN LUG **MOUNT:** FLUSH
SPACE: 30

#	NAME	A	B	TRIP	TYPE	POLE	POLE	TYPE	TRIP	A	B	NAME	#
1	REC - BEDROOM	1260		20	A	1	2		50	4000		AIR HANDLER	2
3	BATHROOM		180	20	C	1			50		4000		4
5	WASHER	360		20	C	1	2		30	1500		CONDENSOR	6
7	REC - LIVNG ROOM		1080	20	A	1			30		1500	"	8
9	REC - KIT	180		20	C	1	2		40	4000		RANGE	10
11	REC - KIT		360	20	C	1			40		4000	"	12
13	LIGHTS	200		20	A	1	2		30	2250		WATER HEATER	14
15	EXTERIOR REC		540	20	C	1			30		2250	"	16
17	REFG	500		20	C	1	2		30	2500		DRYER	18
19	VENT HOOD		500	20		1			30		2500	"	20
21	DISHWASHER	300		20	C	1							22
23	REC - BEDROOM		900	20	C	1							24
25													26
27													28
29													30
		2800	3560							14250	14250		

PHASE A	17050			TYPE
PHASE B	17810	***TOTAL LOAD***	***34 KVA***	A ARC FAULT
	34860	***CONNECTED***	***140 AMPS***	B GROUND FAULT
				C COMBO ARC FAULT & GROUND FAULT

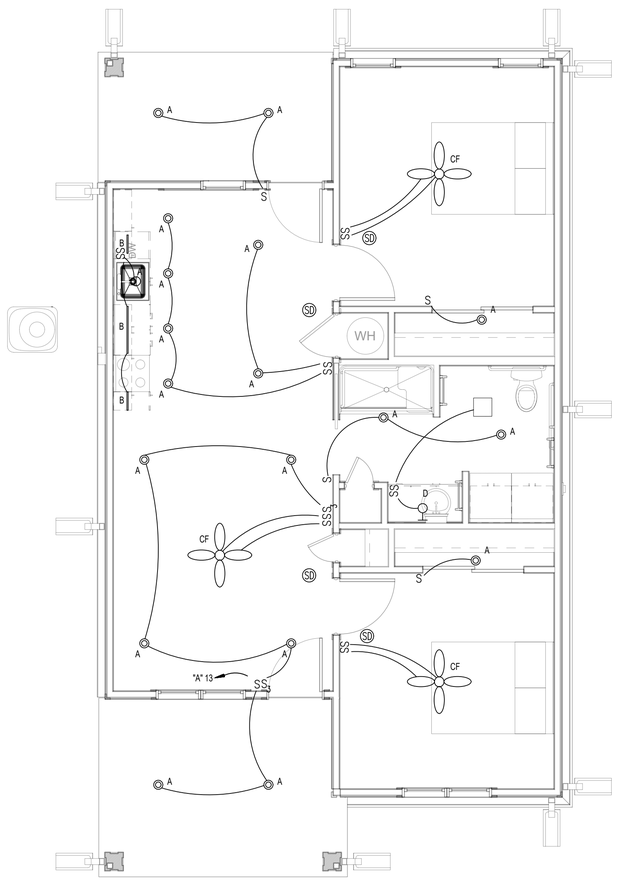

1 LIGHTING PLAN
1/4" = 1'-0"

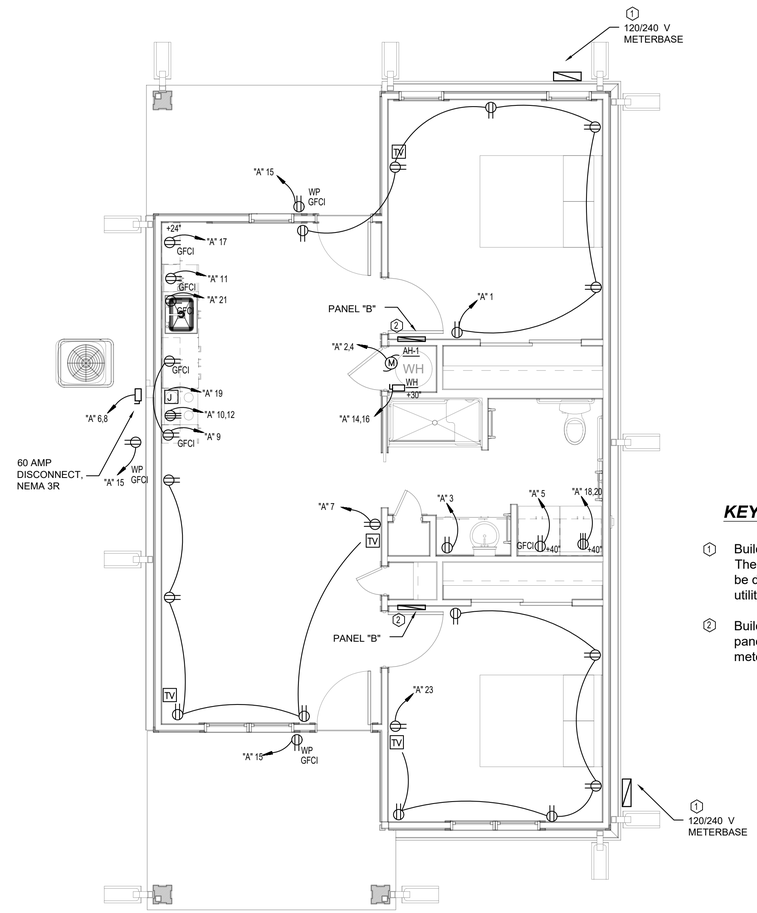

2 POWER PLAN
1/4" = 1'-0"

KEYED NOTES:

1. Building only requires (1) meterbase & main disconnect. The 2 locations shown are optional locations. Location will be determined by building & lot location. Coordinate with utility & refer to site plan for proper placement.
2. Building only requires one panel board (Panel "B"). Locate panel "B" behind bedroom door closest to exterior meterbase.

VETERANS' VILLAGE - 2 BED
CITY OF JONESBORO

AGGIE ROAD, JONESBORO, ARKANSAS

REGARDING THE SENSITIVE ISSUES OF CONFIDENTIALITY AND COPYRIGHT, ANY REQUEST FOR THE RELEASE , OR REPRODUCTION OF THESE DRAWINGS MUST BE APPROVED BY COOPER MIXON ARCHITECTS PLLC

STATE OF ARKANSAS
LICENSED PROFESSIONAL ENGINEER
No. 12041
JEFFERY TODD SINGLETON
3/1/2020

COOPER MIXON architects
505 union street, 2nd fl jonesboro, ar 72401
phone 870.336.0535 www.coopermixon.com

CONSTRUCTION DOCUMENTS

PROJECT NO.
1805

PROJECT NAME
VETERANS' VILLAGE

DATE
2020-2-11

CONTENTS
ELECTRICAL PLAN,

SHEET NUMBER
E-1C

2/11/2020 2:22:09 PM

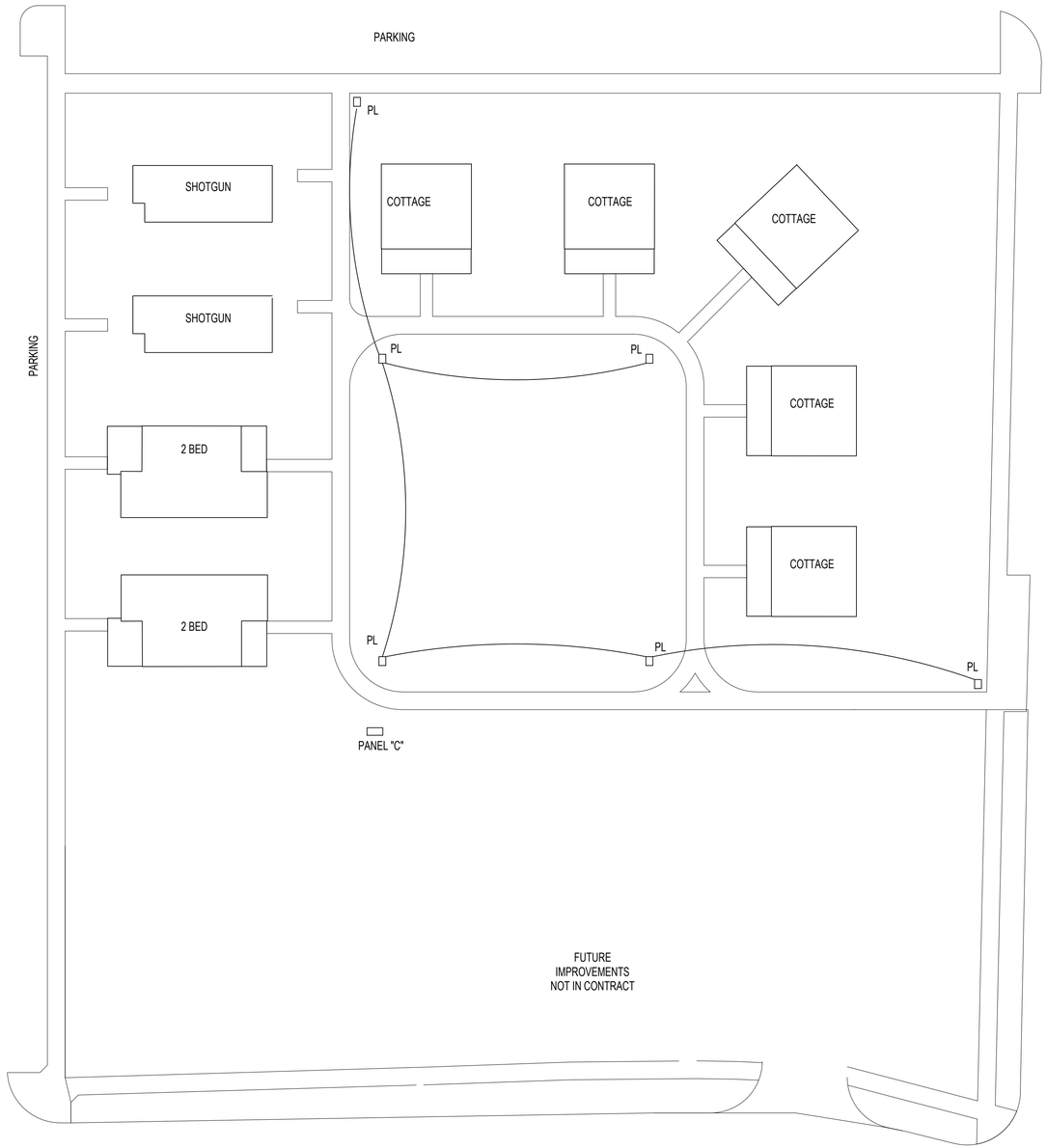

1 ELECTRICALSITE PLAN
1" = 20'

PANEL "C"

VOLTAGE: 120/240 1 PHASE **AIC RTG:** 10K
AMPACITY: 100 MAIN LUG **MOUNT:** FLUSH
SPACE: 24

#	NAME	A	B	TRIP	POLE	POLE	TRIP	A	B	NAME	#
1	POLE LIGHTS	1000		20	2	2	20			SPARE	2
3	"		1000	20			20			"	4
5	SPARE			20	1						6
7	SPARE			20	1						8
9											10
11											12
13											14
15											16
17											18
19											20
21											22
23											24
		1000	1000					0	0		

PHASE A 1000
PHASE B 1000
2000

TOTAL LOAD 2 KVA
CONNECTED 8 AMPS

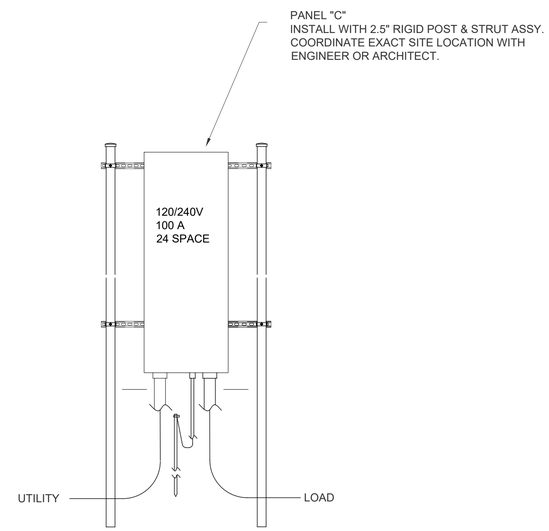

2 PANEL "C" LAYOUT
NTS

VETERANS' VILLAGE
CITY OF JONESBORO

AGGIE ROAD, JONESBORO, ARKANSAS

REGARDING THE SENSITIVE ISSUES OF CONFIDENTIALITY AND COPYRIGHT, ANY REQUEST FOR THE RELEASE , OR REPRODUCTION OF THESE DRAWINGS MUST BE APPROVED BY COOPER MIXON ARCHITECTS PLLC

STATE OF ARKANSAS
LICENSED PROFESSIONAL ENGINEER
No. 12041
JEFFERY TODD SINGLETON
3/1/2020

COOPER MIXON architects
305 union street, 2nd flr
jonesboro, ar 72401
phone 870.336.0335
www.coopermixon.com

CONSTRUCTION DOCUMENTS

PROJECT NO.
1805

PROJECT NAME
VETERANS' VILLAGE

DATE
2020-2-11

CONTENTS
ELECTRICAL PLAN:
SITE LIGHTING

SHEET NUMBER
E-1D

2/11/2020 2:22:09 PM

VETERANS' VILLAGE

CITY OF JONESBORO, ARKANSAS

COOPER MIXON architects

ADFA Arkansas Development Finance Authority

PEOPLE · PRIDE · PROGRESS · JONESBORO · ARKANSAS

VETERANS' VILLAGE
CITY OF JONESBORO

OWNER PROJECT # : 2020 : 12

AGGIE ROAD, JONESBORO, ARKANSAS

REGARDING THE SENSITIVE ISSUES OF CONFIDENTIALITY AND COPYRIGHT, ANY REQUEST FOR THE RELEASE, OR REPRODUCTION OF THESE DRAWINGS MUST BE APPROVED BY COOPER MIXON ARCHITECTS PLLC

COOPER MIXON ARCHITECTS
LL237
REGISTERED ARCHITECTS
ARKANSAS
2020-03-06

COOPER MIXON architects
505 union street, 2nd flr jonesboro, ar 72401
phone 870.336.0326 www.coopermixon.com

PERMIT SET

PROJECT NO.
1805

PROJECT NAME
VETERANS' VILLAGE

DATE
2020-03-06

CONTENTS
COVER SHEET

SHEET NUMBER
G-001

3/12/2020 11:02:59 AM

PROJECT TEAM

PROPERTY OWNER:
CITY OF JONESBORO
300 S CHURCH STREET
JONESBORO, AR 72401
PHONE: 870.336.7229

CONTACT: CRAIG LIGHT, ENGINEERING DIRECTOR

CIVIL ENGINEER:
FISHER ARNOLD
1801 LATOURETTE DR
JONESBORO, AR 72404
PHONE: 870.932.1076

CONTACT: JEREMY BEVILL

ARCHITECT:
COOPER MIXON ARCHITECTS
505 UNION STREET, SECOND FLOOR
JONESBORO, AR 72401
PHONE: 870.336.0536

CONTACT: JOHN MIXON

M.P.E. ENGINEER:
SINGLETON ENGINEERING
2001 SUBURBAN LANE
PARAGOULD, AR 72452
PHONE: 870.897.2921

CONTACT: TODD SINGLETON

MAP OF REGION

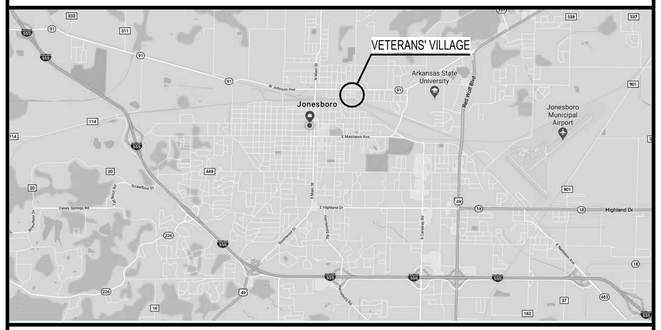
VETERANS' VILLAGE
Jonesboro
Arkansas State University
Jonesboro Municipal Airport
Highland Dr
Caraway Rd
Nettleton Ave
Stadium Blvd
Aggie Rd
Phillips Dr
Flaming Arrow Dr
Parker Rd
Kathryn Dr
Malvern Ave
Gee St
Cate Ave
Caldwell Dr
Creekside Dr
Dan Avenue
Cypress St
Fairview St
Lawson St
Lillian St
Lynn St
Patrick St
Fisher St
Allis St
Chalky St
Johnson Ave
Matthews Ave
Oleson Ave
Nettleton Ave
Stadium Blvd
Red Wolf Blvd
Southwest Drive
Greensboro Rd
Cypress St
Caldwell Dr
Creekside Dr
Dan Avenue

ADA ACCESSIBILITY REQUIREMENTS

MANEUVERING CLEARANCE AT DOORS

PROVIDE MANEUVERING CLEARANCES AT MANUAL SWINGING DOORS AND GATES

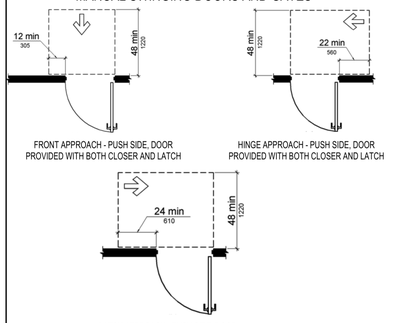

FRONT APPROACH - PUSH SIDE, DOOR PROVIDED WITH BOTH CLOSER AND LATCH

HINGE APPROACH - PUSH SIDE, DOOR PROVIDED WITH BOTH CLOSER AND LATCH

LATCH APPROACH - PUSH SIDE, DOOR PROVIDED WITH CLOSER

ENTRY DOOR REQUIREMENTS FOR PUBLIC DOORS WITH CLOSERS - EXTERIOR (PUSH) SIDE

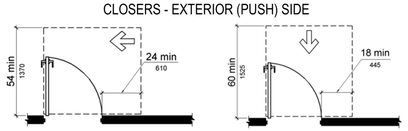

LATCH APPROACH - PULL SIDE, DOOR PROVIDED WITH CLOSER

FRONT APPROACH - PULL SIDE

ENTRY DOOR REQUIREMENTS FOR PUBLIC DOORS WITH CLOSERS - INTERIOR (PULL) SIDE

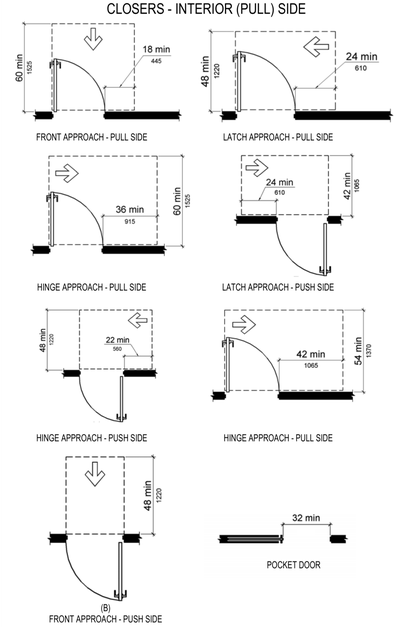

FRONT APPROACH - PULL SIDE

LATCH APPROACH - PULL SIDE

HINGE APPROACH - PULL SIDE

LATCH APPROACH - PUSH SIDE

HINGE APPROACH - PUSH SIDE

HINGE APPROACH - PULL SIDE

POCKET DOOR

(B)
FRONT APPROACH - PUSH SIDE

DOOR REQUIREMENTS FOR ALL OTHER PUBLIC DOORS

MOUNTING HEIGHTS

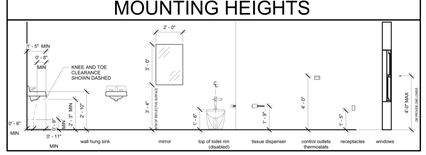

GRAB BAR ATTACHMENT

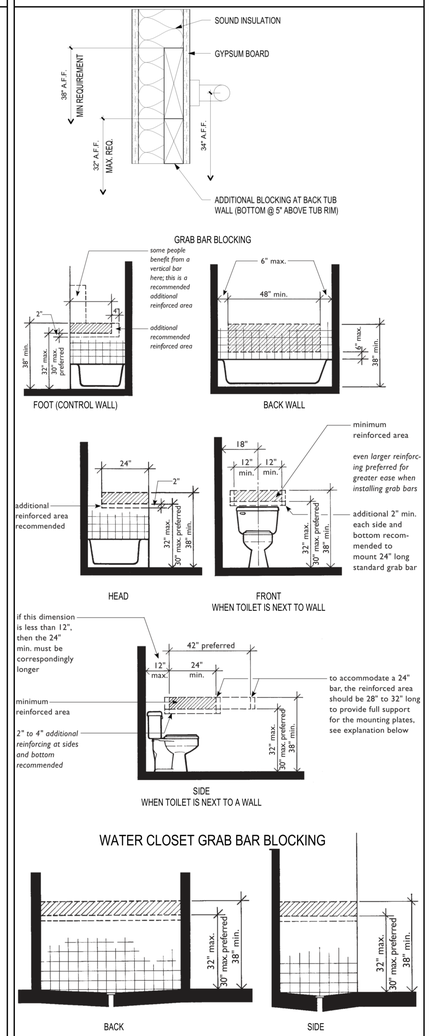

WATER CLOSET GRAB BAR BLOCKING

ADAPTABLE SHOWER GRAB BAR BLOCKING

LAUNDRY EQUIPMENT

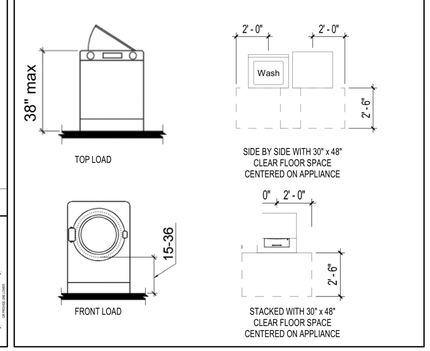

KITCHEN CLEARANCES

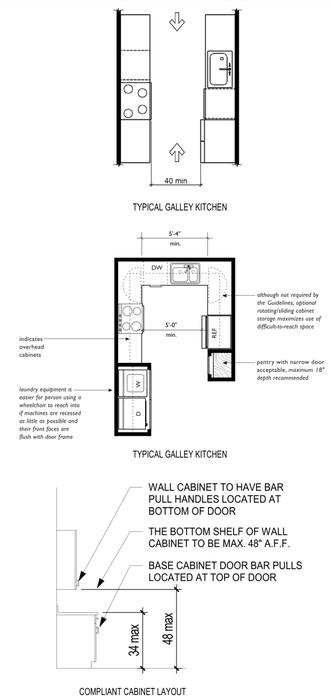

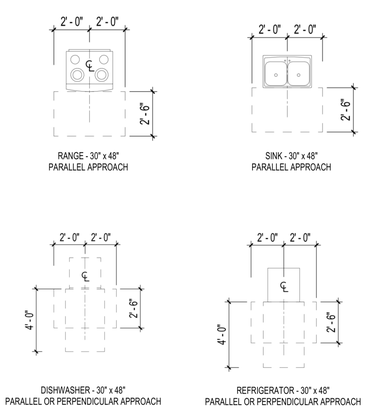

REQUIRED CLEARANCE AT APPLIANCES

BATHROOM CLEARANCES

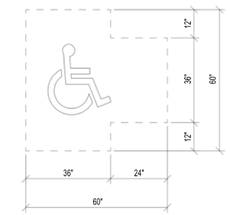

ALTERNATE TURNING SPACE

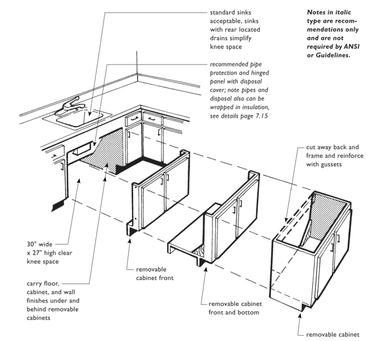

Notes in italic type are recommendations only and are not required by ANSI or Guidelines.

REMOVABLE BASE CABINET AT LAVATORY / SINK

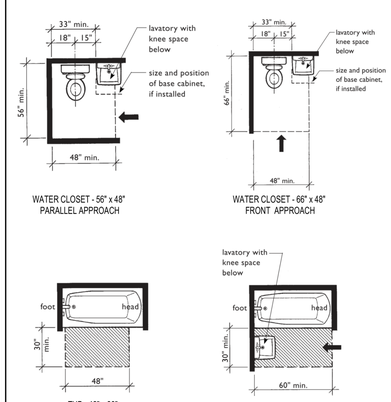

ROLL IN SHOWER / ROD & SHELF

1623BFSTD – ACCESSIBLE SHOWERS

inches

Interior: 60 x 30 x 74 ⅞
Exterior: 62 x 32 ⅛ x 76 ⅛

The 1623BFSTD roll-in shower features innovative installation design, including an engineered leveled base and improved front threshold. A true time and money saver, our pre-leveled base lets you install directly on a **level** floor. And its front threshold is engineered to keep a constant level without the use of brackets during installation.

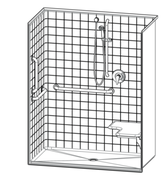

FEATURES

- Pre-leveled base
- Acryl-X™ applied acrylic surface
- ⅞ skirt
- ½ beveled threshold
- Barrier free when properly installed
- Smooth tile
- Center drain
- Lifetime limited warranty (30 year commercial)

OPTIONS

- Grab bars
- Fold-up seat
- Hand-held shower assembly with slide bar
- Pressure balancing mixing valve
- Soap dish
- Curtain rod and/or shower curtain

CODE COMPLIANCE

- ADA
- FHA
- ICC/ANSI A117.1
- IAPMO Z124/2017
- HUD UM"3a
- CAN/CSA-B651-04
- CSA B45.11

**Code compliant when fully equipped and installed according to guidelines.

AQUATIC ADVANTAGE

- National distribution
- 7 manufacturing facilities
- Private fleet
- Centralized customer service
- Field support

COLOR & TRIM OPTIONS

Stock	Upgraded
White	Almond Biscuit Bone

**Additional custom colors available. (Contact Customer Service).

AQUATIC
The bath people

Aquatic products may be specified as Lasco Bathware.

Customer Service: 800.945.2726 • aquaticbath.com

AQUATIC
The bath people

Aquatic products may be specified as Lasco Bathware.

TECHNICAL SPECIFICATIONS

1623BFSTD

Interior: 60 x 30 x 74 ⅞
Exterior: 62 x 32 ⅛ x 76 ⅛
inches

ADA/ANSI compliant when fully equipped and installed according to guidelines.

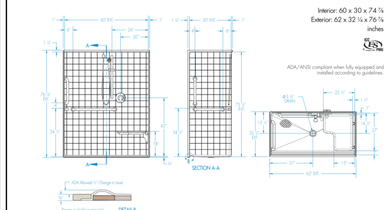

FEATURES Dimensional Tolerance ± ⅛". Dimensions needed for site preparation should be measured from the unit. Aquatic assumes no responsibility for preparatory work.

Type and Model #	Material	Wall Finish	Pieces	Drain	Dam/Skirt Height	Net Wt. lbs	Pkg. Wt. lbs
Shower #1623BFSTD	Acryl-X™	Smooth tile	1	Center	⅞", ½" threshold	180	190

DIMENSIONS

Specifications	inches
Width: Overall / Net	62 / 60
Depth: Overall / Net	32 ⅛ / 30
Height: Overall / Net	76 ⅞ / 74 ⅞
Enclosure Opening:	60
Skirt Height:	⅞
Drain Rough-In (from Back Wall)	15 ⅛
Drain Rough-In (from Side Wall)	31

FRAMING DIMENSIONS inches

Type	D Depth	W Width	H Height	A	B	C
Alcove	32 ⅛	62 ⅛	–	Box Out	31	15 ⅛

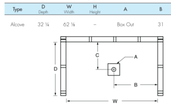

Customer Service: 800.945.2726 • aquaticbath.com

Rev. 11.13.18

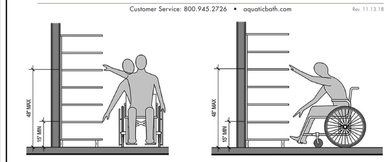

SIDE APPROACH

FORWARD APPROACH

REACH REQUIREMENTS

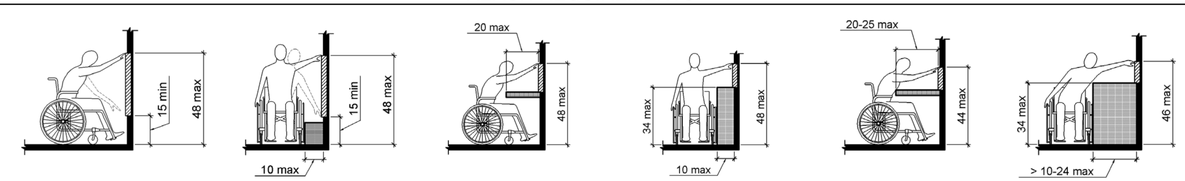

VETERANS' VILLAGE
CITY OF JONESBORO

AGGIE ROAD, JONESBORO, ARKANSAS

OWNER PROJECT # : 2020 : 12

REGARDING THE SENSITIVE ISSUES OF CONFIDENTIALITY AND COPYRIGHT, ANY REQUEST FOR THE RELEASE, OR REPRODUCTION OF THESE DRAWINGS MUST BE APPROVED BY COOPER MIXON ARCHITECTS PLLC

COOPER MIXON ARCHITECTS PLLC
LL237
REGISTERED ARCHITECTS
ARKANSAS
2020-03-06

COOPER MIXON architects
505 union street, 2nd flr
phone:870.336.0535
pressbox: ar 12601
www.coopermixon.com

PERMIT SET

PROJECT NO.
1805

PROJECT NAME
VETERANS' VILLAGE

DATE
2020-03-06

CONTENTS
ADA ACCESSIBILITY REQUIREMENTS

SHEET NUMBER
G-003

3/12/2020 11:03:01 AM

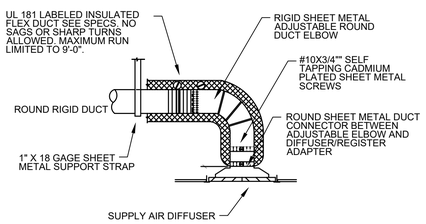

1 DUCT & DIFFUSER DETAIL
NTS

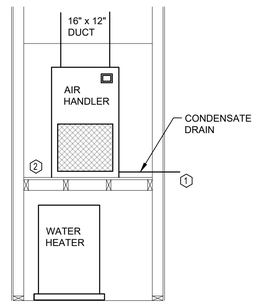

1 AIR HANDLER DETAIL
NTS

L E G E N D

SYMBOL	DESCRIPTION
	BRANCH DUCT TAKE-OFF SEE DETAIL
	TURNING VANES
	DUCT TEE CONNECTION
	RETURN AIR DUCT TAKE-OFF SEE DETAIL
	DUCT TRANSITION
	OPPOSED BLADE VOLUME DAMPER W/ CONCEALED CEILING DAMPER REGULATOR
	GRILLE OR DIFFUSER MARK C F M
	SUPPLY AIR
	RETURN AIR
	EXHAUST AIR
T	THERMOSTAT
H	HUMIDISTAT
R.A.	RETURN AIR
S.A.	SUPPLY AIR
F.A.	FRESH AIR
C.A.	COMBUSTION AIR
M.A.	MIXED AIR
F.D.	FIRE DAMPER

GENERAL NOTES:

1. All work to to be performed in accordance with the rules & regulations of the "2010 Arkansas Mechanical Code", latest addition of the NFPA, & all codes & ordinances by the local Authority Having Jurisdiction (AHJ).
2. Mechanical contractor shall field verify exact mechanical services prior to project bidding & starting any work. Contractor shall visit the site & be familiar with site conditions. No equipment or material is to be ordered or fabricated prior to field verification of all measurements, clearances, & potential conflicts with existing conditions or that of other trades on the job.
3. These drawings are diagrammatic in nature. The mechanical contractor shall include all needed fittings, offsets, changes in directions, etc needed for a complete & operational systems.
4. Mechanical contractor shall pay all utility fees & charges as part of base bid in contract.
5. Mechanical contractor shall be responsible for coordinating all work with that of other trades (electrical, plumbing, architectural, etc) prior to & during construction.
6. Mechanical contractor must review the architectural drawings for the reflected ceiling plan for exact placement of air devices. Ceiling mounted sprinkler, gravity drainage systems, lighting, & electrical requirements take precedence over ceiling mounted mechanical requirements.
7. Do not route any ductwork over electrical panels.
8. Maintain 10' minimum clearance between fresh air intakes & plumbing vents, exhaust fan discharge, & flues. Cordinate with all other contractors on site.
9. All ducts must be mounted as high as possible. to maintain maximum height above finished floor.
10. All duct dimensions represent airflow area. Increase duct dimension as erquied where internal liner is specified.
11. All ductwork shall be constructed from either galvanized steel in conformance with SMACNA "HVAC Duct Construction Standards." latest edition, or flexible air duct listed under UL-181 standards as Class I Air Duct material. All ducts must be insulated.
12. All supply, return, exhaust & outside air ducts shall be either internally lined with 1" approved anti-microbial duct liner or externally wrapped with 2" fiberglass with foil-scrim--kraft vapor.
13. All wiring installed for controls, power, interlocks, etc which are to be installed in conduit unless otherwise incicated. All such installations must meet NFPA & NEC, & local requirements.
14. Provide min 4" concrete pads under all ground mounted condensing units. Each pad to extend a minimum of 6" beyond unit edges on all sides.
15. Provide access panels in ceilings other than lay-in type where necessary. Coordinate size & location with owner's representative to achieve greatest accessibility for maintenance purposes.

APPLIANCES

ITEM	DESCRIPTION	MAKE & MODEL	DIMENSIONS	ELECTRICAL
RH	RANGEHOOD	FRIGIDAIRE FBD2400K	33.5 - 35" H 24" W 25" D	120V / 60 hz / 10A

EXHAUST FAN SCHEDULE

ITEM	PRODUCT MFG.	CFM	ESP	RPM	SONES	ELECTRICAL Volt / Phase / Amp	CONTROL	REMARKS
EF-1	GREENHECK SP-B110 *	90	1/8"	950	1.5	120 / 1 / 1.8	DEDICATED SWITCH	SEE NOTES:

* OR EQUAL

NOTES:
1. Factory mounted integral disconnect & backdraft damper.
2. Wall cap equal to a GREENHECK "WC-6" or roof jack equal to a "GREENHECK #RJ-6x9, both with integral birdscreen, backdraft damper 7 black enamel finish.

FAN COIL UNIT SCHEDULE

ITEM	PRODUCT MFG.	CFM	HEATING				ELECTRICAL			REMARKS
			HEATING CAPACITY	FUEL	CAPACITY	EXT. STATIC PRESSURE	VOLTS PHASE HERTZ	MINIMUM BRANCH CIRCUIT AMPACITY	MAXIMUM FUSE SIZE	
AH-1	CARRIER FFMANP018	600	7.5 KW	ELECTRIC	18,000 BTU	0.5	240 1 60	40.1 Amps	50 Amps	Provide digital programmable thermostat. Provide with condensate float switch.
AH-2	CARRIER FFMANP024	800	7.5 KW	ELECTRIC	24,000 BTU	0.5	240 1 60	40.4 Amps	50 Amps	Provide digital programmable thermostat. Provide with condensate float switch.

HEAT PUMP UNIT SCHEDULE

ITEM	PRODUCT MFG.	HEATING			COOLING						ELECTRICAL			REMARKS
		HEATING CAPACITY	AMB (F)	COP	SIZE (TONS)	CAPACITY (BTUH)	SENS. CAP. (BTUH)	EDB (F)	EWB (F)	AMB (F)	VOLTS PHASE HERTZ	MINIMUM BRANCH CIRCUIT AMPACITY	MAXIMUM FUSE SIZE (AMPS)	
HP-1	CARRIER 25HCE418	17,800 BTUH	47.0	3.4	1.5	17,800	12,820	80.0	67.0	95.0	240 1 60	11.8	20	Field installed filter/dryer & site glass. Mount on concrete pad.
HP-2	CARRIER 25HCE424	22,200 BTUH	47.0	3.4	1.5	22,200	16,150	80.0	67.0	95.0	240 1 60	14.2	25	Field installed filter/dryer & site glass. Mount on concrete pad.

VETERANS' VILLAGE
CITY OF JONESBORO
AGGIE ROAD, JONESBORO, ARKANSAS

REGARDING THE SENSITIVE ISSUES OF CONFIDENTIALITY AND COPYRIGHT, ANY REQUEST FOR THE RELEASE , OR REPRODUCTION OF THESE DRAWINGS MUST BE APPROVED BY COOPER MIXON ARCHITECTS PLLC

STATE OF ARKANSAS
LICENSED PROFESSIONAL ENGINEER
No. 12041
JEFFERY TODD SINGLETON
3/1/2020

COOPER MIXON architects
505 union street, 2nd flr jonesboro, ar 72401
phone 870.336.0558 www.coopermixon.com

CONSTRUCTION DOCUMENTS

PROJECT NO.
1805

PROJECT NAME
VETERANS' VILLAGE

DATE
2020-2-11

CONTENTS
MECHANICAL PLAN: GENERAL NOTES, DETAILS, & SCHEDULES

SHEET NUMBER
M-1

2/11/2020 2:22:09 PM

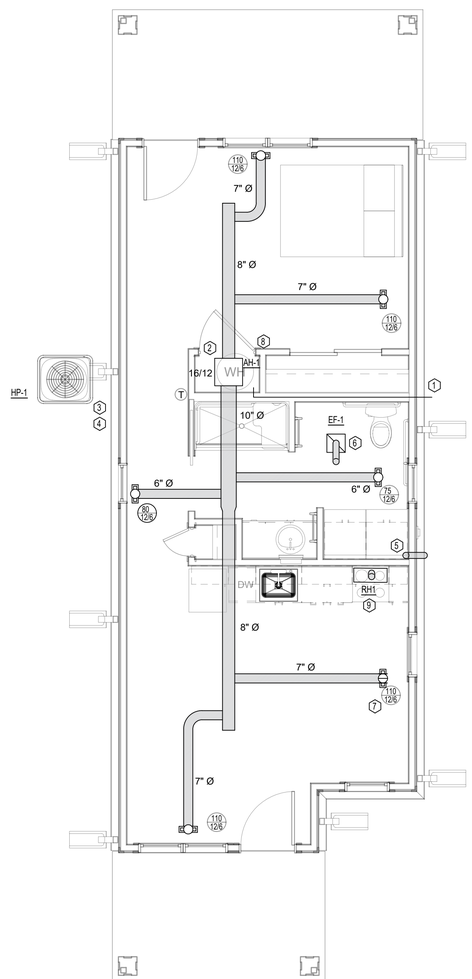

1 MECHANICAL PLAN
1/4" = 1'-0"

KEYED NOTES:

1. Route insulated condensate drain to the exterior. Sleeve penetration through exterior wall seal weathertight.
2. Air handler platform to be min 40" above finished floor. Allow min 36" free space underneath for plumbing equipment. Platform to be framed with 3/4" fire-rated plywood over 2"x4" framing.
3. Sleeve penetration through exterior wall for line set, and seal weathertight.
4. Heat pump to be mounted on min 4" concrete pad.
5. Provide DryerBox wall box. Supply 4" rigid Vent & metal wall cap with integral backdraft damper & birdscreen.
6. Provide 6" rigid duct for exhaust fan as required. Terminate at a roof jack with integral backdraft damper & birdscreen.
7. Supply air registers sized as noted, white, adjustable with integral diffuser, equal to Price 540.
8. Louvered door required for return air into the air handler. 16" x 20' air filter to be installed in the air handler.
9. Provide 6" rigid duct for exhaust range hood as required. Terminate at a roof jack with integral backdraft damper & birdscreen.

2/11/2020 2:22:09 PM

VETERANS' VILLAGE- 1 BED
CITY OF JONESBORO
AGGIE ROAD, JONESBORO, ARKANSAS

REGARDING THE SENSITIVE ISSUES OF CONFIDENTIALITY AND COPYRIGHT, ANY REQUEST FOR THE RELEASE, OR REPRODUCTION OF THESE DRAWINGS MUST BE APPROVED BY COOPER MIXON ARCHITECTS PLLC

STATE OF ARKANSAS
LICENSED PROFESSIONAL ENGINEER
No. 12041
JEFFERY TODD SINGLETON
3/1/2020

COOPER MIXON architects
505 union street, 2nd flr
phone 870.336.0536
jonesboro, ar 72401
www.coopermixon.com

CONSTRUCTION DOCUMENTS

PROJECT NO.
1805

PROJECT NAME
VETERANS' VILLAGE

DATE
2020-2-11

CONTENTS
MECHANICALPLAN,

SHEET NUMBER
M-1A

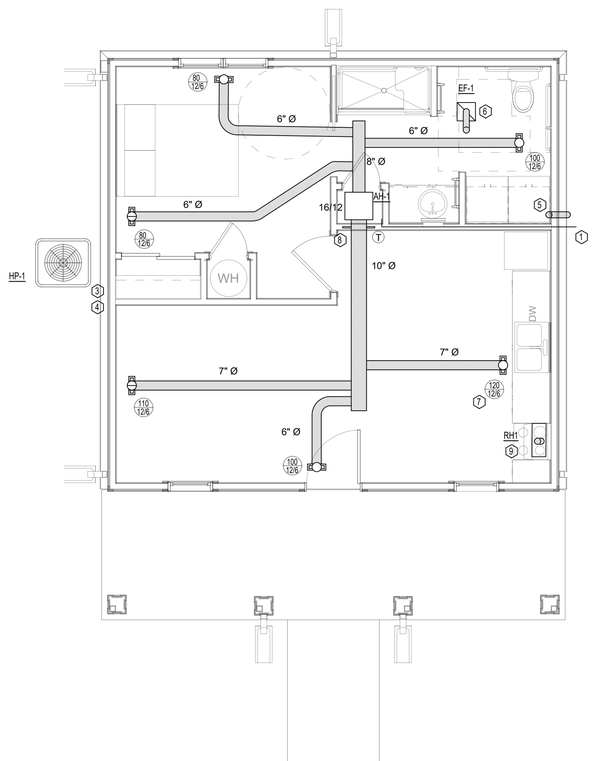

1 MECHANICAL PLAN
1/4" = 1'-0"

KEYED NOTES:

1. Route insulated condensate drain to the exterior. Sleeve penetration through exterior wall seal weathertight.
2. Air handler platform to be min 40" above finished floor. Allow min 36" free space underneath for plumbing equipment. Platform to be framed with 3/4" fire-rated plywood over 2"x4" framing.
3. Sleeve penetration through exterior wall for line set, and seal weathertight.
4. Heat pump to be mounted on min 4" concrete pad.
5. Provide DryerBox wall box. Supply 4" rigid Vent & metal wall cap with integral backdraft damper & birdscreen.
6. Provide 6" rigid duct for exhaust fan as required. Terminate at a roof jack with integral backdraft damper & birdscreen.
7. Supply air registers sized as noted, white, adjustable with integral diffuser, equal to Price 540.
8. Mount 20" X 20" Louvere in wall for return air. 16" x 20' air filter to be installed in the air handler.
9. Provide 6" rigid duct for exhaust range hood as required. Terminate at a roof jack with integral backdraft damper & birdscreen.

VETERANS' VILLAGE - COTTAGE
CITY OF JONESBORO

AGGIE ROAD, JONESBORO, ARKANSAS

REGARDING THE SENSITIVE ISSUES OF CONFIDENTIALITY AND COPYRIGHT, ANY REQUEST FOR THE RELEASE, OR REPRODUCTION OF THESE DRAWINGS MUST BE APPROVED BY COOPER MIXON ARCHITECTS PLLC

STATE OF ARKANSAS
LICENSED PROFESSIONAL ENGINEER
No. 12041
JEFFERY TODD SINGLETON
3/1/2020

COOPER MIXON architects
505 union street, 2nd fr jonesboro, ar 72401
phone 870.336.0536 www.coopermixon.com

CONSTRUCTION DOCUMENTS

PROJECT NO.
1805

PROJECT NAME
VETERANS' VILLAGE

DATE
2020-2-11

CONTENTS
MECHANICALPLAN,

SHEET NUMBER
M-1B

2/11/2020 2:22:09 PM

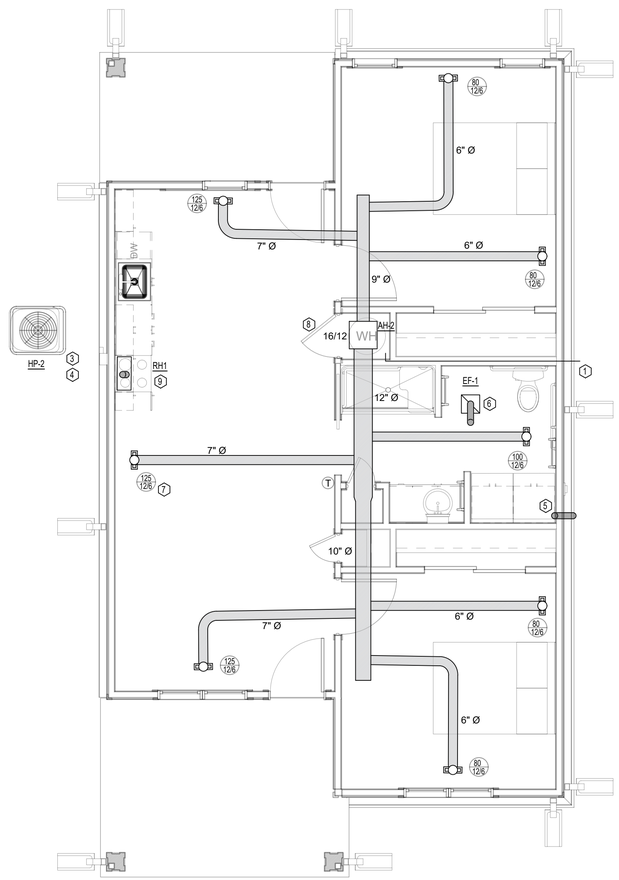

1 MECHANICAL PLAN
1/4" = 1'-0"

KEYED NOTES:

1. Route insulated condensate drain to the exterior. Sleeve penetration through exterior wall seal weathertight.
2. Air handler platform to be min 40" above finished floor. Allow min 36" free space underneath for plumbing equipment. Platform to be framed with 3/4" fire-rated plywood over 2"x4" framing.
3. Sleeve penetration through exterior wall for line set, and seal weathertight.
4. Heat pump to be mounted on min 4" concrete pad.
5. Provide DryerBox wall box. Supply 4" rigid Vent & metal wall cap with integral backdraft damper & birdscreen.
6. Provide 6" rigid duct for exhaust fan as required. Terminate at a roof jack with integral backdraft damper & birdscreen.
7. Supply air registers sized as noted, white, adjustable with integral diffuser, equal to Price 540.
8. Louvered door required for return air into the air handler. 16" x 20' air filter to be installed in the air handler.
9. Provide 6" rigid duct for exhaust range hood as required. Terminate at a roof jack with integral backdraft damper & birdscreen.

VETERANS' VILLAGE - 2 BED
CITY OF JONESBORO

AGGIE ROAD, JONESBORO, ARKANSAS

REGARDING THE SENSITIVE ISSUES OF CONFIDENTIALITY AND COPYRIGHT, ANY REQUEST FOR THE RELEASE, OR REPRODUCTION OF THESE DRAWINGS MUST BE APPROVED BY COOPER MIXON ARCHITECTS PLLC

STATE OF ARKANSAS
LICENSED PROFESSIONAL ENGINEER
No. 12041
JEFFERY TODD SINGLETON
3/1/2020

COOPER MIXON architects
505 union street, 2nd fr jonesboro, ar 72401
phone 870.336.0536 www.coopermixon.com

CONSTRUCTION DOCUMENTS

PROJECT NO.
1805

PROJECT NAME
VETERANS' VILLAGE

DATE
2020-2-11

CONTENTS
MECHANICALPLAN,

SHEET NUMBER
M-1C

2/11/2020 2:22:09 PM

GENERAL NOTES:

1. All work to to be performed in accordance with the rules & regulations of the "2009 International Plumbing Code", latest addition of the NFPA, & all codes & ordinances by the local Authority Having Jurisdiction (AHJ).
2. Plumbing contractor shall field verify exact plumbing services, utility locations, & sizes & invert elevations (water, sanitary, gas, etc), prior to construction, project bidding, & starting any work. Contractor shall visit the site & be familiar with site conditions. No equipment or material is to be ordered or fabricated prior to field verification of all measurements, clearances, & potential conflicts with existing conditions or that of other trades on the job.
3. All services (water, sanitary, gas, etc), shall terminate 5 feet outside of the building, except where shown otherwise. See site utility drawings for continuation of all service lines.
4. These drawings are diagrammatic in nature. The plumbing contractor shall include all needed fittings, couplings, offsets, changes in directions, etc needed for a complete & operational systems.
5. Plumbing contractor shall pay all utility fees & charges as part of base bid in contract.
6. Plumbing contractor shall be responsible for coordinating all work with that of other trades (electrical, hvac, architectural, etc) prior to & during construction.
7. Plumbing contractor must review the architectural drawings for exact location of plumbing fixtures and/or floor drains.
8. Provide stop valves at all plumbing fixtures on both hot & cold water supply lines. Valves, escutcheons, fittings, etc shall be chrome plated & installed tight to the wall.
9. Hot & cold water supply branches for all equipment having quick closing valves of any type shall have water hammer arrestors installed.
10. Provide cleanouts in all sewers, whether shown or not, at intervals not to exceed 100 feet, & at each change of direction greater than 45 degrees. Coordinate location with architect and/or engineer prior to installation.
11. Sanitary waste & vent piping shall be Schedule 40 PVC.
12. Slope sanitary sewer lines at the following: Line size 2.5" & smaller: 2% (1/4" fall per foot). Line size 3" & larger: 1% (1/8" fall per foot)
13. All piping penetrations thru rated wall & ceilings must be made with metal pipe or UL Listed approved devices. Fire stop all pipe penetrations thru rated walls. See architectural drawings for locations, ratings, & fire stopping details.
14. Below slab water lines to be Crosslinked Polyethylene (PEX), or type k soft drawn copper without fittings or joints. If in copper sleeve in entirely with armaflex or appropriate polyethylene sleeve material.
15. Above ground water lines may be Crosslinked Polyethylene (PEX) or type L copper.
16. Unless noted otherwise on plans, all cold & hot water line sizes shall be 1/2".
17. Do not route any piping over electric rooms, computer rooms, or electrical panels.
18. Do not route water lines in exterior walls, unless otherwise indicated. When routed in exterior walls, position lines to on the heated side (interior side) of the wall insulation.
19. Maintain 10' minimum clearance between fresh air intakes, operable windows & flues, plumbing vents & gas regulators.
20. An approved trap guard (conform to NSF-14, ASSE 1018 or ASSe 1044) shall be installed at all floor & hub drains. All drains shall have deep seal traps (4" min). Install trap guard devices per mfg's instructions.
21. Plumbing contractor shall clean, flush, & disinfect all cold & hot water piping & all fixtures prior to completion of work.
22. All storm, condensate, sewer & vent piping shall be rodded & cleaned prior to completion of work. All traps shall be cleaned & primed prior to completion of work.
23. Provide dielectric unions at dissimilar metals.
24. Provide approved backflow prevention or anti-siphon devices at all fixtures that could contaminate the potable water system.
25. Insulate all exposed water piping above finished floor. Insulate all exposed hot water & drain piping for accessible fixtures per ANSI A117.1 & ADA requirements.

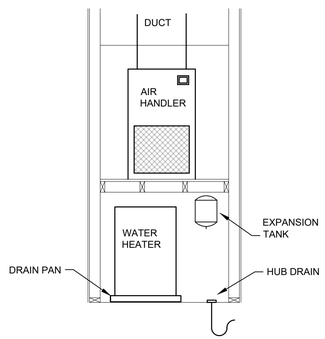

1 WATER HEATER LOCATION DETAIL
NTS /

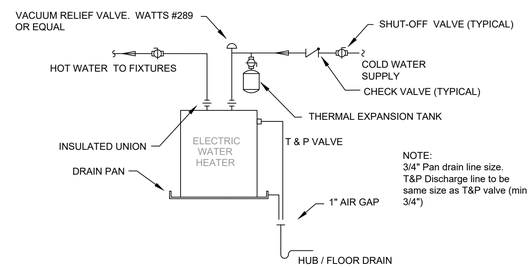

2 WATER HEATER DETAIL
NTS /

PLUMBING SYMBOLS:

- PIPE UP
- PIPE DOWN
- TEE (Top, Side, Bottom)
- FD — FLOOR DRAIN
- WCO — WALL CLEAN OUT
- FPHB — HOSE BIBB
- DCO — DOUBLE CLEANOUT
- SANITARY SEWER
- SEWER VENT
- DOMESTIC COLD WATER
- HW — DOMESTIC HOT WATER
- GAS — GAS LINE
- CONDENSATE DRAIN LINE

APPLIANCES

ITEM	DESCRIPTION	MAKE & MODEL	DIMENSIONS	ELECTRICAL
DW	DISHWASHER	FRIGIDAIRE FBD2400K	33.5 - 35" H 24" W 25" D	120V / 60 hz / 10A
RFG	TOP FREEZE REFRIGERATOR	FRIGIDAIRE FFET1022U	60" H 24" W 26" D	120V / 60 hz / 6A

ALL APPLIANCES NOT IN CONTRACT
SHOWN FOR COORDINATION PURPOSES ONLY

PLUMBING FIXTURE SCHEDULE

ITEM	DESCRIPTION	WASTE	COLD WATER	HOT WATER	MOUNT	VENT	TRAP	FLOW	REFERENCE PRODUCT	COMMENTS
L1	LAVATORY	2"	1/2"	1/2"	UNDERMOUNT	2"	1 1/4"	0.5 GPM	BOWL: TOSCANA "3370-V" (undermount, ceramic, white), FAUCET: PRICE PFISER "LG142-5000" (Single handle, polished chrome, 4" centers), DRAIN: PROFLOW "PFGD100" (Heavy duty cast brass, chrome plated)	Provide PROFLOW "PFPTP100" & PLUMBEREX "396" white p-trap cover. Provide 1/4" turn supply stop valve - BRASS CRAFT "G2BRPX19". Provide stainlesss steel braided supply hoses - EASTMAN "48088"
WC	WATER CLOSET - ADA	3"	3/4"	---	FLOOR	2"	---	1.28 GPF	BOWL: PROFLOW "PF1503WH", TANK: PROFLOW "PF6112WH", SEAT & COVER: PROFLOW "PFTSW2000A" (Elongated, Std height, molded wood seat & cover)	Provide 1/4 " turn supply stop valve - BRASS CRAFT "G2BRPX19" Provide stainless steel braided supply hoses - EASTMAN "48088"
SK	KITCHEN SINK - ADA	2"	1/2"	1/2"	UNDERMOUNT	2"	1 1/4"	2.2 GPM	BOWL: "MOEN "G18195" (Single compartment, stainless steel), FAUCET: "PRICE PFISER "G529-PFCC" (Single handle, single hole, polished chrome)DISPOSAL:	Provide PROFLOW "PFPTP100" p-trap. Provide 1/4" turn supply stop valve - BRASS CRAFT "G2BRPX19". Provide stainlesss steel braided supply hoses - EASTMAN "48088"
SH	SHOWER - ADA	2"	1/2"	1/2"	FLOOR	2"	2"	2.5 GPM	SHOWER MODULE: AQUATIC "1623BFSTD" (60" X 32", ADA compliant. Complete kit with stainless steel grab bars, seat, hand held shower with slidebar, & valve)	Provide shower drain pan & p-trap as required
WH	WATER HEATER,	---	3/4"	3/4"	FLOOR	---	---	21 GPH @ 90° RISE	BRADFORD WHITE "RE230L6" (28 Gal, 22"w x 32"h, 240v, 4500 watts) EXPANSION TANK "H2PRO PH5" (2.1 Gal capacity, 8" x 11.6"h)	Provide full port 1/4 turn ball valve & dielectric union on cold & hot water tank connections. Include insulation jacket. Provide full port 1/4 turn ball valve to isolate expansion tank.
WMB	WASHER BOX	2"	1/2"	1/2"	WALL	2"	2"	---	LSP PRODUCTS "OB-323-TOP"	Brass 1/4 turn valve, adjustable faceplate, white
IMB	ICE MAKER BOX	---	1/2"	---	WALL	---	---	---	LSP PRODUCTS "OB-811-LL"	Brass 1/4 turn valve, adjustable faceplate, white
FPHB	FREEZE PROOF HOSE BIBB	---	3/4"	---	WALL	---	---	---	PROFLOW "PF73"	
HD	HUB DRAIN	2"	---	---	FLOOR	2"	2"	---	MATCH DRAIN PIPE SYSTEM	Provide proset system trap guard
FCO	FLOOR CLEANOUT	SAME AS LINE	---	---	FLOOR	---	---	---	ZURN "CO2452-PVC-VP"	PVC body, nickel bronze frame & cover, adjustable
AAV	AUTOMATIC AIR ADMITTANCE VALVE	---	---	---	---	SAME AS LINE	---	---	STUDOR MINI VENT	Install in an accessible location
WHA	WATER HAMMER ARRESTOR	---	SAME AS LINE	SAME AS LINE	---	---	---	---	WADE "SHOKTROL"	Install where required & on all quick closing valves (dishwashers, sinks, etc)

VETERANS' VILLAGE
CITY OF JONESBORO

AGGIE ROAD, JONESBORO, ARKANSAS

REGARDING THE SENSITIVE ISSUES OF CONFIDENTIALITY AND COPYRIGHT, ANY REQUEST FOR THE RELEASE , OR REPRODUCTION OF THESE DRAWINGS MUST BE APPROVED BY COOPER MIXON ARCHITECTS PLLC

STATE OF ARKANSAS
LICENSED PROFESSIONAL ENGINEER
No. 12041
JEFFERY TODD SINGLETON
3/1/2020

COOPER MIXON architects
505 union street, 2nd fl
jonesboro, ar 72401
phone 870.336.0555
www.coopermixon.com

CONSTRUCTION DOCUMENTS

PROJECT NO.
1805

PROJECT NAME
VETERANS' VILLAGE

DATE
2020-2-11

CONTENTS
PLUMBING PLAN: GENERAL NOTES, DETAILS, & SCHEDULES

SHEET NUMBER
P-1

2/11/2020 2:22:09 PM

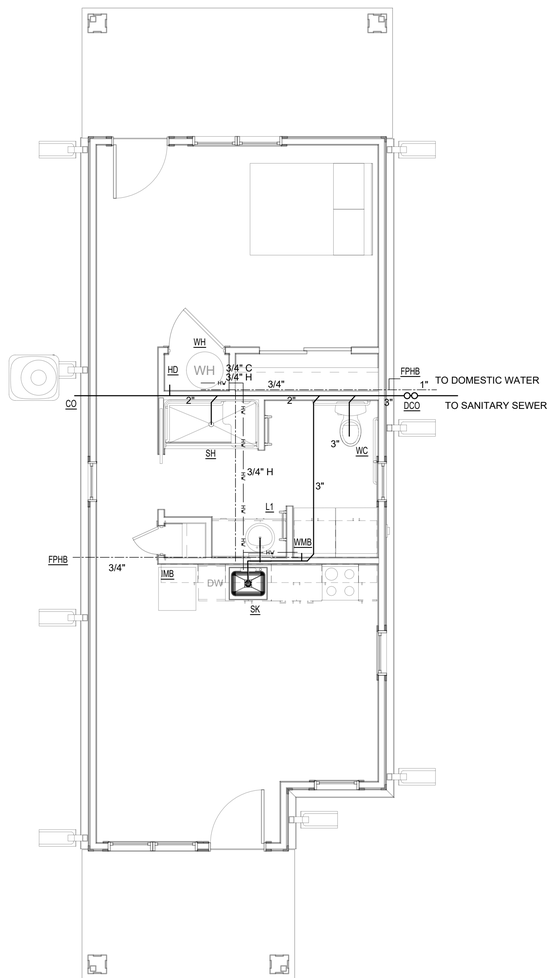

1 PLUMBING PLAN
1/4" = 1'-0"

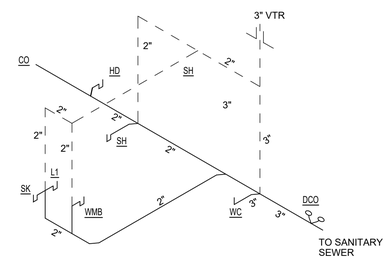

2 RISER PLAN
NTS

VETERANS' VILLAGE- 1 BED
CITY OF JONESBORO

AGGIE ROAD, JONESBORO, ARKANSAS

REGARDING THE SENSITIVE ISSUES OF CONFIDENTIALITY AND COPYRIGHT, ANY REQUEST FOR THE RELEASE, OR REPRODUCTION OF THESE DRAWINGS MUST BE APPROVED BY COOPER MIXON ARCHITECTS PLLC

STATE OF ARKANSAS
LICENSED PROFESSIONAL ENGINEER
No. 12041
JEFFERY TODD SINGLETON
3/1/2020

COOPER MIXON architects
505 union street, 2nd flr jonesboro, ar 72401
phone 870.336.0536 www.coopermixon.com

CONSTRUCTION DOCUMENTS

PROJECT NO.
1805

PROJECT NAME
VETERANS' VILLAGE

DATE
2020-2-11

CONTENTS
PLUMBING PLAN,

SHEET NUMBER
P-1A

2/11/2020 2:22:09 PM

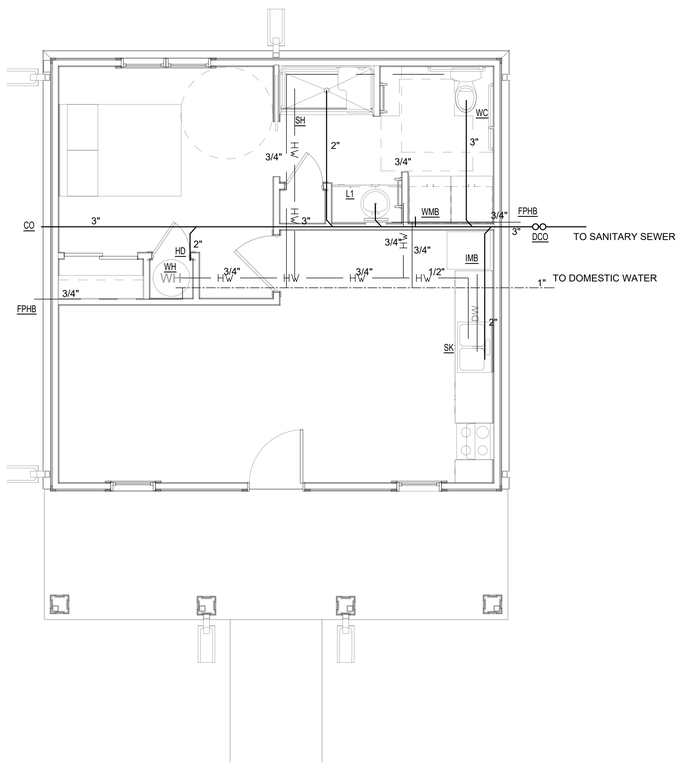

1 PLUMBING PLAN
1/4" = 1'-0"

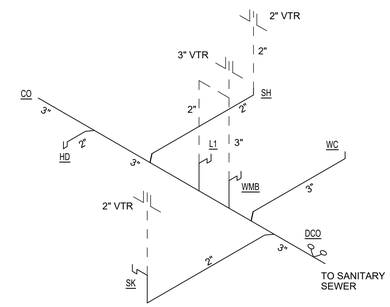

2 RISER PLAN
NTS

VETERANS' VILLAGE - COTTAGE
CITY OF JONESBORO

AGGIE ROAD, JONESBORO, ARKANSAS

REGARDING THE SENSITIVE ISSUES OF CONFIDENTIALITY AND COPYRIGHT, ANY REQUEST FOR THE RELEASE , OR REPRODUCTION OF THESE DRAWINGS MUST BE APPROVED BY COOPER MIXON ARCHITECTS PLLC

STATE OF ARKANSAS
LICENSED PROFESSIONAL ENGINEER
No. 12041
JESSEY TODD SINGLETON
3/1/2020

COOPER MIXON architects
505 union street, 2nd fl jonesboro, ar 72401
phone 870.336.0326 www.coopermixon.com

CONSTRUCTION DOCUMENTS

PROJECT NO.
1805

PROJECT NAME
VETERANS' VILLAGE

DATE
2020-2-11

CONTENTS
PLUMBING PLAN,

SHEET NUMBER
P-1B

2/11/2020 2:22:09 PM

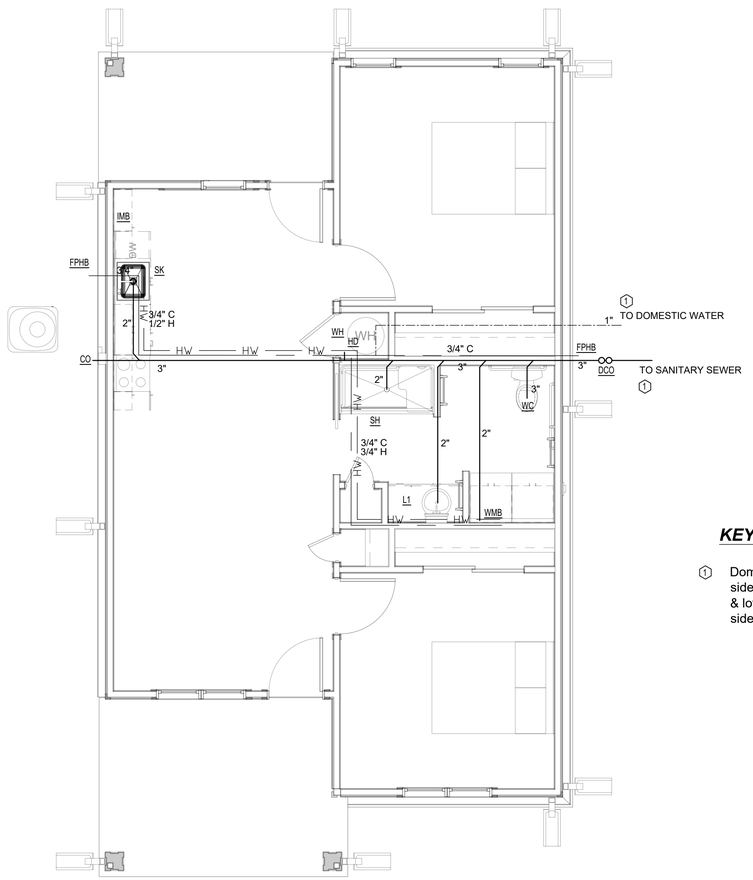

1 PLUMBING PLAN
1/4" = 1'-0"

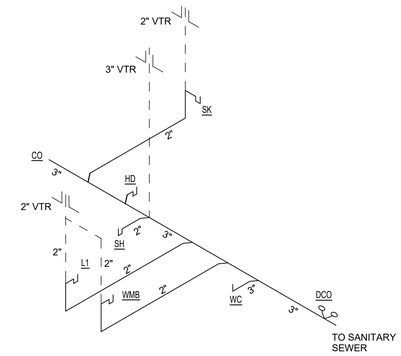

2 RISER PLAN
NTS

KEYED NOTES:

1. Domestic water & sanitary sewer may be located on either side of the building. Location varies depending on building & lot location. Refer to civil site plan to determine proper side for both domestic water & sanitary sewer.

VETERANS' VILLAGE - 2 BED
CITY OF JONESBORO

AGGIE ROAD, JONESBORO, ARKANSAS

REGARDING THE SENSITIVE ISSUES OF CONFIDENTIALITY AND COPYRIGHT, ANY REQUEST FOR THE RELEASE , OR REPRODUCTION OF THESE DRAWINGS MUST BE APPROVED BY COOPER MIXON ARCHITECTS PLLC

STATE OF ARKANSAS
LICENSED PROFESSIONAL ENGINEER
No. 12041
JEFFERY TODD SINGLETON
3/1/2020

COOPER MIXON architects
505 union street, 2nd fl
jonesboro, ar 72401
phone 870.336.0555
www.coopermixon.com

CONSTRUCTION DOCUMENTS

PROJECT NO.
1805

PROJECT NAME
VETERANS' VILLAGE

DATE
2020-2-11

CONTENTS
PLUMBING PLAN,

SHEET NUMBER
P-1C

2/11/2020 2:22:09 PM

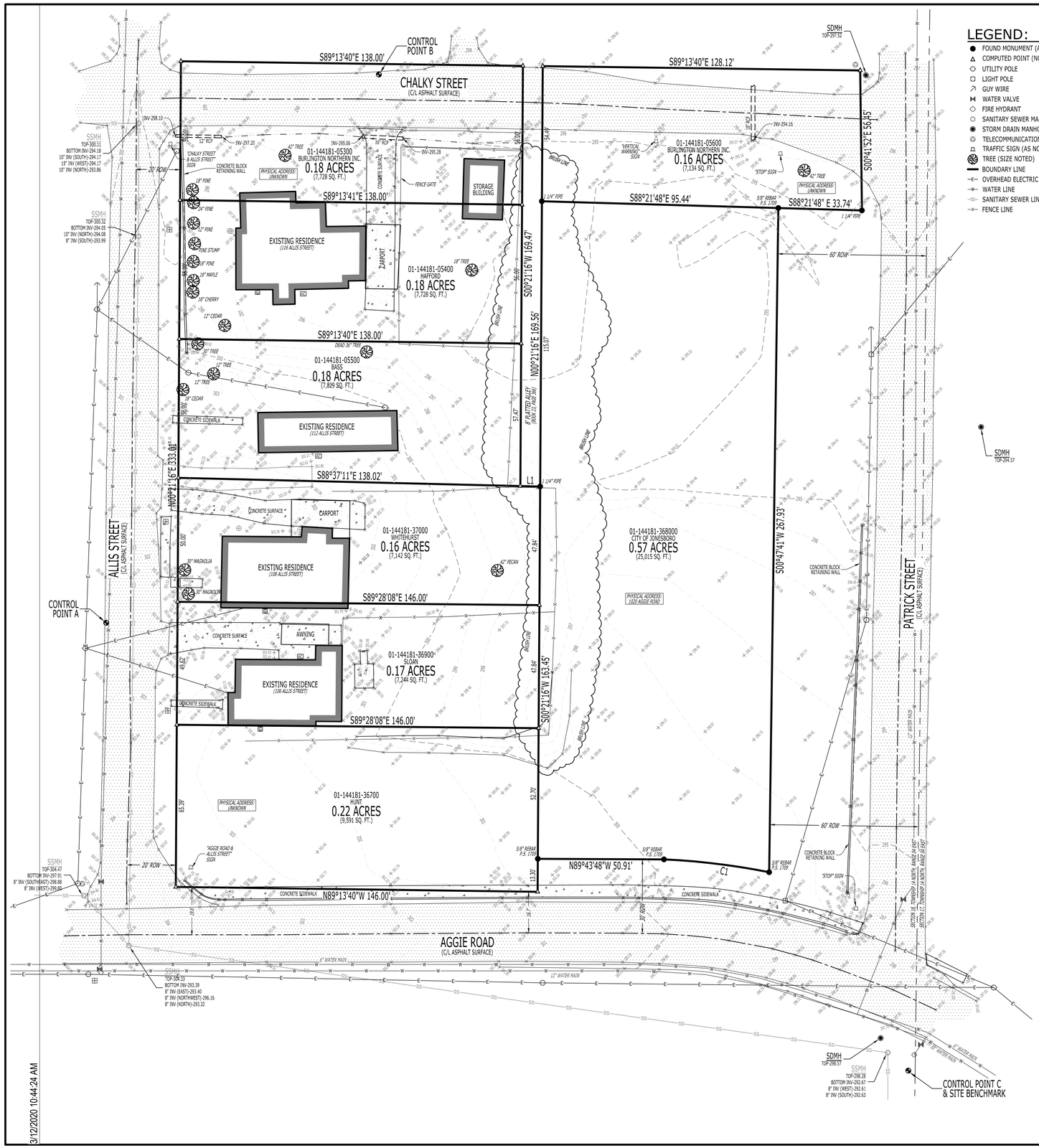

LEGEND:

- FOUND MONUMENT (AS NOTED)
- COMPUTED POINT (NOT MONUMENTED)
- UTILITY POLE
- LIGHT POLE
- GUY WIRE
- WATER VALVE
- FIRE HYDRANT
- SANITARY SEWER MANHOLE
- STORM DRAIN MANHOLE
- TELECOMMUNICATIONS PEDESTAL
- TRAFFIC SIGN (AS NOTED)
- TREE (SIZE NOTED)
- BOUNDARY LINE
- OVERHEAD ELECTRIC LINE
- WATER LINE
- SANITARY SEWER LINE
- FENCE LINE

UTILITY PROVIDERS:

ELECTRIC, WATER & SEWER:
CITY WATER & LIGHT
400 EAST MONROE
JONESBORO, AR 72401
(870)-935-5581

NATURAL GAS:
CENTERPOINT ENERGY
3013 OLD FEED HOUSE ROAD
JONESBORO, AR 72404
(870)-972-6682

TELECOMMUNICATIONS:
AT&T ARKANSAS
723 SOUTH CHURCH
JONESBORO, AR 72401
1-800-464-7928

SUDDENLINK COMMUNICATIONS
1520 SOUTH CARAWAY ROAD
JONESBORO, AR 72401
(870)-935-3615

RITTER COMMUNICATIONS
2400 RITTER DRIVE
(870)-336-3434

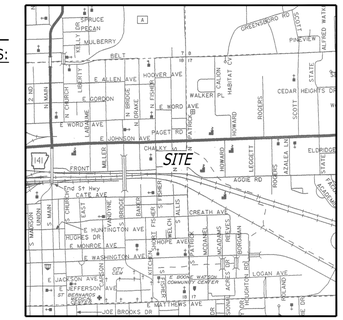
SITE
CHALKY ST
E ALLEN AVE
E CHURCH
E GORDON
E WOOD AVE
E JOHNSON AVE
PAGET RD
FRONT
Cnd St Hwy
E HUNTINGTON AVE
E WASHINGTON AVE
E JACKSON AVE
E JEFFERSON AVE
JOE BROCKS DR
E MOORE AVE
HUGHES DR
BRAID AVE
BREATH AVE
LOGAN AVE
E MATTHEWS AVE
E BOONE
E CONNOR DR
ALLIS
ALLEN
WALKER
P. CALLIN
HUBBARD
BROOKS
SCOTT
STATE
CEDAR HEIGHTS DR
ELDRIDGE
LEGGETT
JOWARD
MILLER
ALALEA
BRADLEY
AGGIE RD
STATE
PINEVIEW
GREENWOOD RD
ALFRED WATT
SPRUCE
SYCAMORE
MULBERRY
BELT
N MAIN
N CHURCH
N BRIDGE
N FOREST
N MORO
N FOREST
N LAKE
N WILSON
N MARSH
N ALLEN
N ALLEN
N ALLEN