Renovations to
Jonesboro Recreational Center
Jonesboro Arkansas
PHASE II

SMITH ENGINEERING CO.
CIVIL & STRUCTURAL
P.O.BOX 299 • MARION, AR 72364 • (870) 739-5833

MECHANICAL/PLUMBING/ELECTRICAL ENGINEER:
GARVER, LLC
4701 Northshore Dr.
North Little Rock, Arkansas 72118
501.376.3633

ARCHITECT:
BRACKETT KRENNERICH
100 East Huntington Ave, Suite D
Jonesboro, Arkansas 72403
870.932.0571
www.bkarchts.com

ABBREVIATIONS

ABOVE FINISH FLOOR	A.F.F.
ACOUSTICAL	ACOUST.
ALUMINUM	ALUM.
APPROXIMATE	APPROX.
BOTTOM OF FOOTING	B.O.F.
CEILING	CLG.
CENTER LINE	℄
EACH	EA.
ELECTRIC WATER COOLER	E.W.C.
FINISH	FIN.
FIRE EXTINGUISHER	F.E.
FIRE EXTINGUISHER CABINET	F.E.C.
FLOOR	FLR.
GENERAL CONTRACTOR	G.C.
INSULATION	INSUL.
JOINT	JNT.
KITCHEN FIRE EXTINGUISHER	K.F.E.
MECHANICAL	MECH.
METAL THRESHOLD	M.T.
NOMINAL	NOM.
NOT IN CONTRACT	N.I.C.
ON CENTER	O.C.
PLATE	PL
REQUIRED	REQ.
SIMILAR	SIM.
SQUARE	SQ.
SUSPENDED	SUSP.
TOP OF CURB	T.O.C.
TOP OF FOOTING	T.O.F.
TOP OF WALL / WALK	T.O.W.
TYPICAL	TYP.
WITH	W/

MATERIALS KEY

CONCRETE
STEEL
WOOD STUDS
CONCRETE BLOCK
PLYWOOD
FINISH WOOD
WOOD FRAMING OR BLOCKING
GYPSUM BOARD
RIGID INSULATION
BATT INSULATION
COMPACT FILL
GRAVEL FILL
ASPHALT PAVING
OSB

SYMBOLS KEY

SECTION — A / A500 — SECTION NUMBER / SHEET NUMBER
DETAIL — 1 / A001 — DETAIL NUMBER / SHEET NUMBER
DOOR — 1
WINDOW — A
ALUMINUM FRAME — AF-1
HOLLOW METAL FRAME — HMF-1
EXISTING HOLLOW METAL FRAME — EHMF-1
EXISTING CONTOUR LINE
NEW CONTOUR LINE
NEW SPOT ELEVATION — 234.56
FINISH ELEVATION — ELEV. = 100.00

VICINITY MAP

SCHEDULE OF SPECIAL INSPECTIONS

MATERIAL / ACTIVITY	SERVICE	APPLICABLE TO THIS PROJECT Y/N	EXTENT	AGENT*	DATE COMPLETED
1705.4 Masonry Construction					
1. Verify construction of mortar joints	Field Inspection		Periodic	1	
2. Verify placement of reinforcemen and connectors	Field Inspection		Periodic	1	
3. Verify grout space prior to grouting	Field Inspection		Periodic	1	
4. Verify type, size, and location of anchors, including details of anchorage of masonry to structural members, frames, or other construction.	Field inspection		Periodic	1,4	
1705.6 Soils					
1. Verify use of proper materials, densities, and lift thicknesses during placement and compaction of compacted fill	Field inspection		Continuous	1	
1. Architectural Designated Seismic Systems (per ASCE 7-10)					
a. Interior non-structural partition walls and connections	Field Inspection		Periodic	1	
b. Suspended Ceiling Systems	Field Inspection		Periodic	1	
c. Cabinets	Field Inspection		Periodic	1	
d. Storefront and curtainwall framing	Field Inspection		Periodic	1	
e. Glass in glazed interior and exterior storefront and curtainwall systems	Field Inspection		Periodic	1	
2. Mechanical & Electical Designated Seismic Systems (per ASCE 7-10)					
a. Mechanical and Electrical Components					
1) Air-side HVAC fans, air handlers, air conditioning units, air distribution boxes, and other mechanical components constructed of sheet metal	Field Inspection		Periodic	2	
2) Wet side HVAC, boilers, furnaces, atmospheric tanks and bins, chillers, water heaters, heat exchangers, air separators, manufacturing or process equipment and other mechanical components constructed of high-deformability materials	Field Inspection		Periodic	2	
6) Motor control centers, panel boards, switch gear, instrumentation cabinets, and other components constructed of sheet metal framing	Field Inspection		Periodic	3	
7) Communication equipment, computers, instrumentation and controls	Field Inspection		Periodic	3	
9) Light fixtures	Field Inspection		Periodic	3	
b. Distribution Systems					
1) Piping and tubing including in-line components	Field Inspection		Periodic	2	
2) Ductwork, including in–line components	Field Inspection		Periodic	2	
3) Electrical conduit and cable trays	Field Inspection		Periodic	3	
4) Bus ducts				3	
5) Plumbing	Field Inspection		Periodic	2	
1705.16 Fire-Resistant Penetrations and Joints					
1. Inspect penetration firestop	Field testing		Per ASTM E 2174	1	
2. Inspect fire-resistant joint systems	Field testing		Per ASTM E 2393	1	

* INSPECTION AGENTS	FIRM
1. Architect	Brackett-Krennerich Architects
2. **Mechanical Engineer**	GARVER ENGINEERING
3. Electrical Engineer	GARVER ENGINEERING
4. Structural Engineer	SMITH ENGINEERING

Notes: 1. The inspection and testing agent(s) shall be engaged by the Owner or the Owner's Agent, and not by the Contractor or Subcontractor whose work is to be inspected or tested. Any conflict of interest must be disclosed to the Building Official prior to commencing work. The qualifications of the Special Inspector(s) and/or testing agencies are subject to the approval of the Building Official and/or the Design Professional.
2. The list of Special Inspectors may be submitted as a separate document, if noted so above.
3. Special Inspections as required by Section 1704.2.5 are not required where the fabricator is approved in accordance with IBC Section 1704.2.5.2
4. Observe on a random basis, operations need not be delayed pending these inspections. Perform these tasks for each welded joint, bolted connection, or steel element.
5. NDT of welds completed in an approved fabricator's shop may be performed by that fabricator when approved by the AHJ. Refer to AISC 360, N7.

Circle "Yes" or "No" as appropriate and date this document below:
Are *Requirements for Seismic Resistance* included in the *Statement of Special Inspections?* **Yes**
Are *Requirements for Tornado Resistance* included in the *Statement of Special Inspections?* **No**
DATE: 20 February 2022

INDEX TO DRAWINGS

CIVIL
C001 SITE PLAN & DETAILS

LIFE SAFETY
LS001 LIFE SAFETY

DEMOLITION
D100 FIRST & SECOND FLOOR DEMOLITION PLAN

ARCHITECTURAL
A001 DOOR SCHEDULE, VISUAL DOOR TYPES, AND FRAME DETAILS
A002 FINISH FLOOR PLAN AND SCHEDULE
A100 FIRST FLOOR PLAN, SECOND FLOOR PLAN
A101 VISUAL WALL TYPES AND PLAN DETAILS
A200 BUILDING ELEVATIONS
A201 BUILDING SECTIONS
A400 REFLECTED CEILING PLANS, CEILING DETAILS
A500 WALL SECTIONS
A600 TOILET MOUNTING HEIGHTS AND DETAILS
A601 ENLARGED TOILET PLAN, TOILET ELEVATIONS, DETAILS, MILLWORK & MILLWORK SECTIONS
A700 INTERIOR ELEVATIONS

STRUCTURAL
S100 PLAN & DETAILS

MECHANICAL
M001 GENERAL NOTES AND LEGENDS
M101 HVAC PLAN - DEMO
M201 HVAC PLAN - NEW
M301 HVAC SECTIONS
M501 HVAC DETAILS
M502 HVAC DETAILS
M601 HVAC SCHEDULES

PLUMBING
P001 GENERAL NOTES AND LEGENDS
P101 PLUMBING PLAN - DEMO
P201 PLUMBING PLAN - NEW
P202 SEWER PLAN - NEW
P501 PLUMBING DETAILS
P601 PLUMBING SCHEDULES
P602 PLUMBING RISERS
P603 PLUMBING RISERS

FIRE PROTECTION
F100 FIRE PROTECTION SITE PLAN
F101 FIRE PROTECTION PLAN
F501 FIRE SUPPRESSION DETAILS
F502 FIRE SUPPRESSION DETAILS

ELECTRICAL
E100 GENERAL NOTES AND LEGENDS
E101 ELECTRICAL REFLECTED CEILING PLAN - DEMO
E102 ELECTRICAL PLAN - DEMO
E103 ELECTRICAL REFLECTED CEILING PLAN - NEW
E104 ELECTRICAL PLAN - NEW
E105 FIRE ALARM PLAN
E501 ELECTRICAL DETAILS
E601 ELECTRICAL SCHEDULES
E602 ELECTRICAL RISER DIAGRAM

CODE ANALYSIS

ARKANSAS FIRE PREVENTION CODE, 2012 VOLUMES 1 & 2
2012 INTERNATIONAL BUILDING CODE WITH STATE ADMENDMENTS
2006 ARKANSAS PLUMBING CODE
2010 ARKANSAS MECHANICAL CODE
2017 NATIONAL ELECTRICAL CODE
2006 INTERNATIONAL FUEL AND GAS CODES
2014 ARKANSAS ENERGY CODE
2003 ICC/ANSI A117.1: AMERICAN NATIONAL STANDARDS (ADA)
A.C.A. 12-80-101 ET.SEQ. (ARKANSAS STATE LAW)

OCCUPANCY CLASSIFICATION Non-Separated Use
Phase One
Group B, Business; Group S2 or S1, Storage

BUILDING AREAS
First Floor (existing) 11,340 square feet
Second Floor (existing) 3960 square feet
Total Building Area 15,300 square feet

BUILDING HEIGHT 22'-4"

NUMBER OF STORIES Two (2)

TYPE OF CONSTRUCTION TYPE III-B (FULLY SPRINKLERED)

ALLOWABLE HEIGHT (Table 503) 55'-0"

ALLOWABLE AREA (Table 503)(Section 506) 17,500 sq. ft. per floor

MAXIMUM NUMBER OF STORIES (Table 503) Two (2)

BUILDING SETBACKS Existing building - no exterior additions

EXIT REQUIREMENTS
Exit access travel distance 250'-0"
Maximum common path of egress 100'-0"
Minimum door size 36" (ADA)
Maximum distance to an exit 200'-0"
Minimum corridor width 44"
Egress width per occupant
Stairways .3 inches
Other egress components .2 inches

OCCUPANCY LOADS (Based on completion of Phase three)
First Floor
Assembly 195
Business Occupancies 16
Storage / Mechanical 2
TOTAL 213
Second Floor
Storage / Mechanical 14
TOTAL 14

No height or area modifications made. Building meets allowable heights and areas per Table 503 for most restrictive occupancy requirements (Group S1, Storage).

I HEREBY CERTIFY THAT THESE PLANS & SPECIFICATIONS HAVE BEEN PREPARED BY ME, OR UNDER MY DIRECT SUPERVISION. I CERTIFY THAT TO THE BEST OF MY KNOWLEDGE, THESE PLANS & SPECIFICATIONS ARE AS REQUIRED BY LAW & IN COMPLIANCE WITH THE ARKANSAS FIRE PREVENTION CODE FOR THE STATE OF ARKANSAS.

Kyle L. Cook

BRACKETT KRENNERICH & ASSOCIATES, P.A.
REGISTERED ARCHITECTS
C13
ARKANSAS
20 February 2022

SET NUMBER

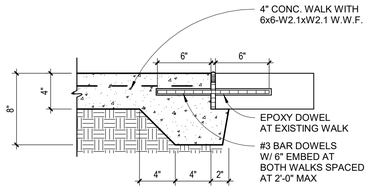

6 walk edge at existing walk
SCALE: 1 1/2" = 1'-0"

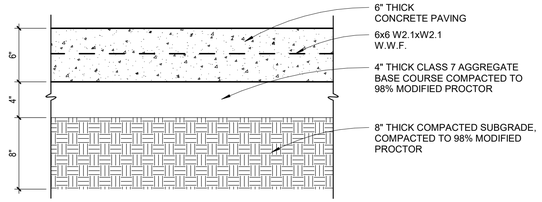

5 concrete paving detail
SCALE: 1 1/2" = 1'-0"

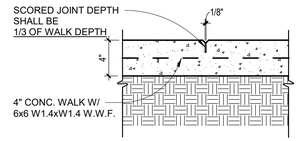

4 saw joint
SCALE: 1 1/2" = 1'-0"

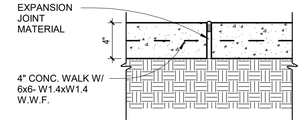

3 control joint
SCALE: 1 1/2" = 1'-0"

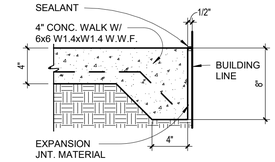

2 edge detail at building
SCALE: 1 1/2" = 1'-0"

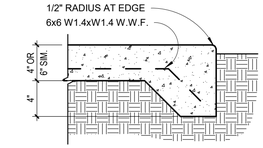

1 walk edge detail
SCALE: 1 1/2" = 1'-0"

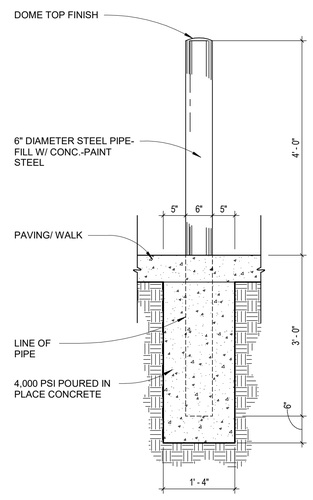

7 pipe bollard detail
SCALE: 3/4" = 1'-0"

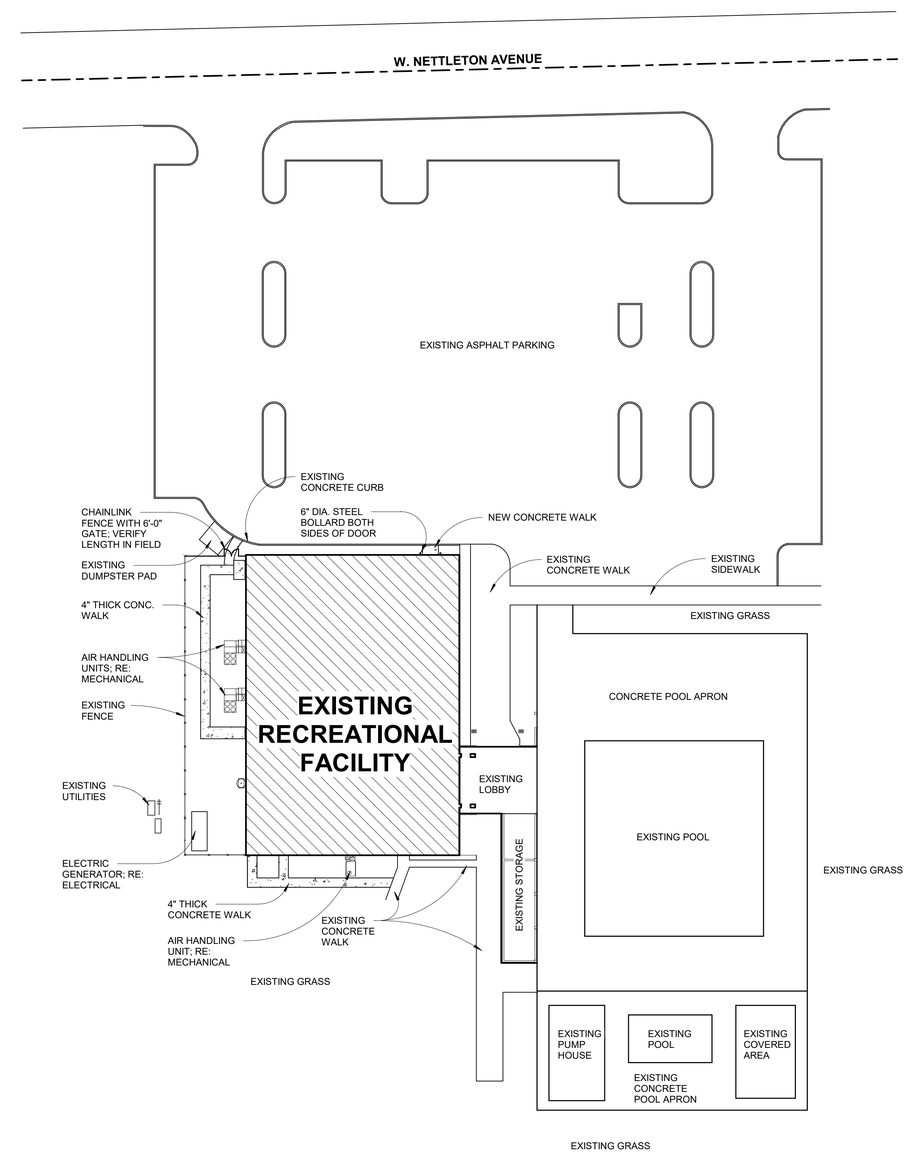

n

site plan
SCALE: 1" = 30'-0"

Renovations to Jonesboro Recreational Center

Jonesboro Arkansas
Phase II

BRACKETT KRENNERICH architects

100 East Huntington Ave. Suite D P.O. Box 1655 870-932-0571 Fax 870-932-0975 www.bkarchts.com

Revision Schedule			
Tag	Rev. Description	Rev. Date	Issued by

BRACKETT-KRENNERICH & ASSOCIATES, P.A. REGISTERED ARCHITECTS CIG ARKANSAS

20 February 2022

Commission Number
2127

C001

Date: February 20 2022

SITE PLAN & DETAILS

A:\2127 - Jonesboro Recreational Center Renovation\5 - PROCUREMENT\BID SET
C001.dwg
3/7/2022 9:26:02 AM

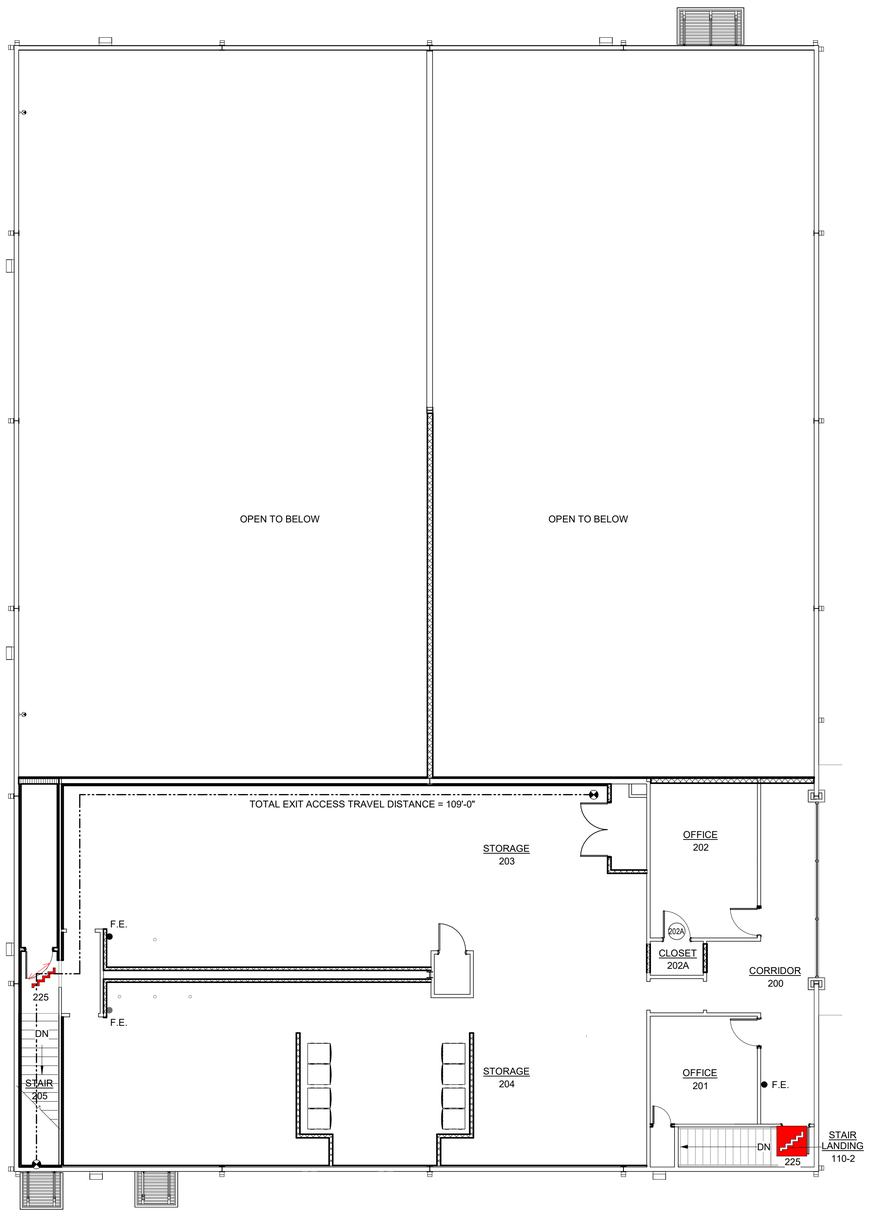

second floor life safety plan

SCALE: 1/8" = 1'-0"

LIFE SAFETY LEGEND

	COMMON PATH OF EGRESS
	EXIT ACCESS TRAVEL PATH
0'-0"	DISTANCE BETWEEN WAY POINTS
	WAY POINT
F.E.	FIRE EXTINGUISER
F.E.C.	FIRE EXTINGUISER CABINET
	EXIT
XXX	EXIT CAPACITY
	EGRESS
XXX	EGRESS CAPACITY
	EXIT STAIRWAY
XXX	STAIR CAPACITY
	EXIT ACCESS STAIRWAY
XXX	STAIR CAPACITY

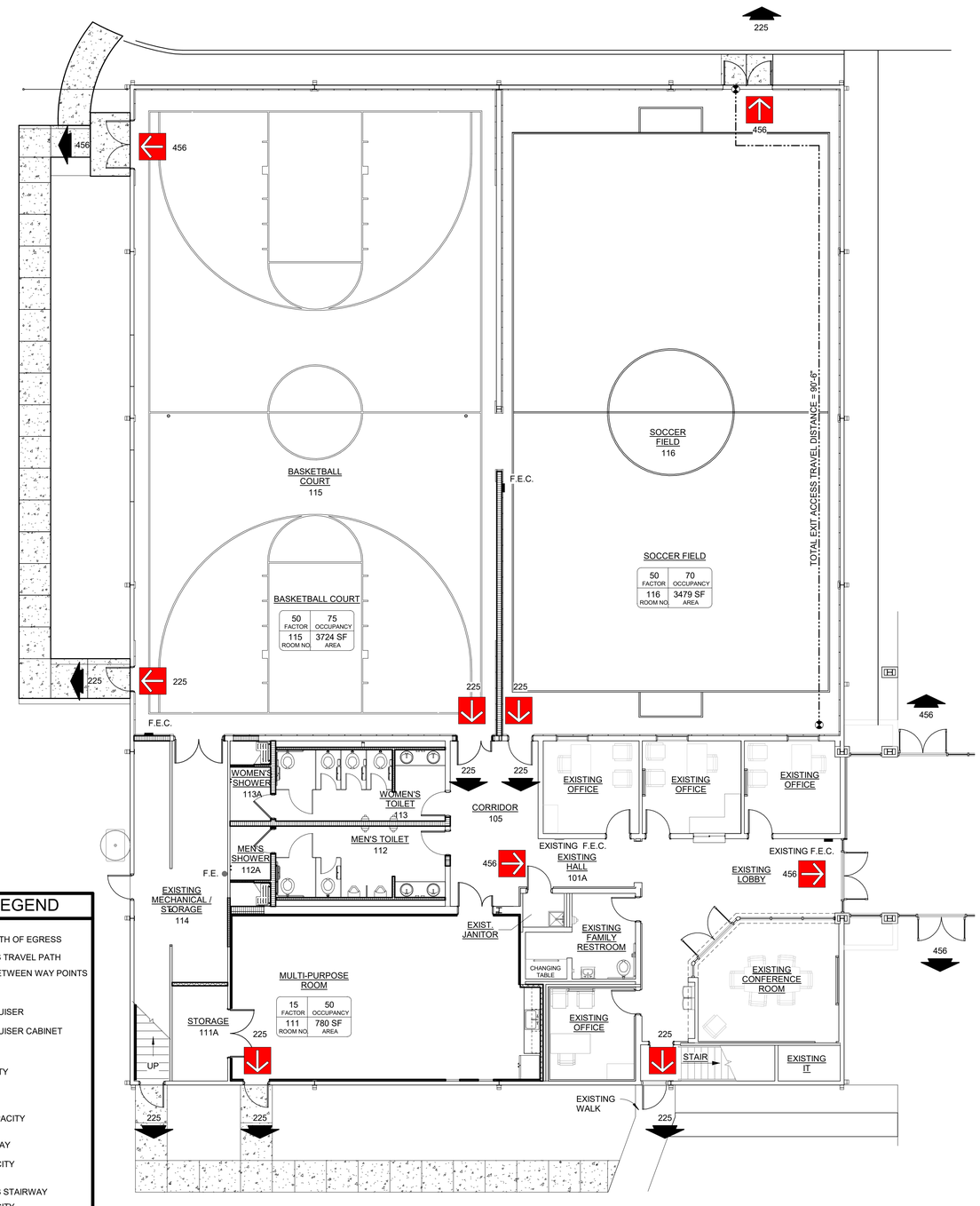

first floor life safety plan

SCALE: 1/8" = 1'-0"

Renovations to Jonesboro Recreational Center

Jonesboro Arkansas Phase II

BRACKETT KRENNERICH architects
100 East Huntington Ave. Suite D P.O. Box 1655
870-932-0571 Fax 870-932-0975
www.bkarchts.com

Revision Schedule			
Tag	Rev. Description	Rev. Date	Issued by

BRACKETT-KRENNERICH & ASSOCIATES, P.A. REGISTERED ARCHITECTS CIS ARKANSAS

20 February 2022

Commission Number 2127

LS001

Date: February 20 2022

LIFE SAFETY

A:\2127 - Jonesboro Recreational Center Renovation\5 - PROCUREMENT\BID SET
2127
3/7/2022 9:26:03 AM

GENERAL DEMOLITION NOTES

1. DASHED LINES INDICATE WHICH ITEMS ARE TO BE DEMOLISHED.
2. REFER TO MECHANICAL, ELECTRICAL, PLUMBING FOR ADDITIONAL DEMOLITION REQUIREMENTS.
3. THESE DRAWINGS ARE INTENDED TO SHOW THE GENERAL SCOPE OF DEMOLITION REQUIRED TO ACCOMPLISH THE NEW WORK. IT IS NOT INTENDED TO SHOW EVERY ITEM OF DEMOLITION. THE CONTRACTOR SHALL PERFORM ALL DEMOLITION NECESSARY TO ACCOMPLISH THE NEW WORK, INCLUDING THAT REQUIRED FOR STRUCTURAL, MECHANICAL, ELECTRICAL AND PLUMBING. REFER TO SPECIFICATIONS FOR PRE-CONSTRUCTION SITE VISIT.
4. REMOVE MISCELLANEOUS NON-FUNCTIONAL ITEMS ATTACHED TO INTERIOR AND EXTERIOR WALLS AND BUILDING STRUCTURE. INCLUDED ARE SUCH ITEMS AS NAILERS, ANCHORS, ACCESSORIES, MECHANICAL AND ELECTRICAL DEVICES, ETC.
5. CONTRACTOR WILL BE RESPONSIBLE FOR DEMOLITION OF CONCRETE FLOOR SLAB AS REQUIRED FOR STRUCTURAL, MECHANICAL, ELECTRICAL AND PLUMBING WORK.
6. ALL LIGHT FIXTURES AND OTHER ELECTRICAL DEVICES IN AREA OF WORK ARE TO BE DISCONNECTED AND REMOVED BY ELECTRICAL CONTRACTOR PRIOR TO CEILING DEMOLITION.
7. ALL MECHANICAL GRILLES IN AREA OF WORK ARE TO BE DISCONNECTD AND REMOVED BY MECHANICAL CONTRACTOR. REFER TO MECHANICAL FOR ADDITIONAL DEMOLITION.
8. REMOVE EXITING CEILING GRID TRIM & WALLS TO RECEIVE NEW CEILING
9. IN AREAS TO RECEIVE NEW FLOORING, CAP ALL FLOOR DRAINS, SEWER DRAINS, & ASSOCIATE PLUMBING TO ACCEPT NEW FLOOR
10. REFFER TO EXTERIOR ELEVATIONS (SHEET A 200) FOR ADDITIONAL DEMOLITION NOTES

DEMOLITION NOTES

1. REMOVE EXISTING CONCRETE BLOCK WALL. DOW TO TOP OF FOOTING BELOW.
2. REMOVE EXISTING METAL STUD WALL AS INDICATED.
3. REMOVE EXISTING HOLLOW METAL FRAME. PATCH OPENING WITH CONCRETE BLOCK.
4. REMOVE EXISTING HOLLOW METAL FRAME & DOOR.
5. REMOVE EXISTING DOOR. PREP FRAME AS REQUIRED TO RECEIVE NEW DOOR.
6. REMOVE EXISTING HOLLOW METAL FRAME AND DOOR.
7. REMOVE EXISTING FIXTURE. SEE PLUMBING FOR ADDITIONAL DEMOLITION NOTES.
8. REMOVE EXISTING TOILET PARTITIONS.
9. REMOVE EXISTING FLOORING MATERIAL AND ADHESIVE TO CONCRETE FLOOR SLAB. PREP AS REQUIRED TO RECEIVE NEW FLOOR FINISH.
10. REMOVE EXISTING SUSPENDED CEILING GRID AND TILES, DUCTWORK AND CEILING GRILLES, LIGHT FIXTURES AND ELECTRICAL CONDUIT.
11. REMOVE PORTION OF EXISTING TILT-UP CONCRETE WALL TO ACCOMMODATE NEW DOOR/FRAME OR MECHANICAL PENETRATION.
12. REMOVE PORTION OF EXISTING CONCRETE SLAB AS REQUIRED FOR NEW PLUMBING WASTE LINE; HATCHED AREA IS FOR REFERENCE ONLY. CONTRACTOR TO CONFIRM AMOUNT OF SLAB TO BE REMOVED TO ACCOMMODATE THIS WORK.
13. REMOVE EXISTING SLEEVE AND PREP FLOOR FOR NEW SLEEVES.
14. REMOVE EXISTING FIRE ESTINGUISHER AS INDICATED.
15. REMOVE EXISTING PRE-HUNG DOOR UNIT.
16. REMOVE RUBBER BASE IN ENTIRE ROOM.
17. REMOVE EXISTING WOOD PANELING.
18. REMOVE CARPET/MIRROR FROM FACE OF WALL.
19. REMOVE PORTION OF EXISTING CONCRETE SLAB AS REQUIRED TO REMOVE STRUCTURAL FRAME.
20. REMOVE EXISTING WOOD STRUCTURE.
21. REMOVE EXISTING TILES, SHOWER, CEILINGS & STUD FRAMING & CAP ALL PLUMBING AT THE FLOOR.
22. REMOVE ALL MIRROR, TRIM & ACCESSORIES FROM BLOCK WALL, CAP PLUMBING AT WALL, PATCH BLOCK AS NECESSARY.
23. COREDRILL THROUGH TILT UP CONCRETE PANEL TO ACCOMMODATE DRYER VENTS.
24. SAW CUT EXISTING HOLLOW METAL FRAME OUT OF TILT UP CONCRETE PANEL.
25. REMOVE EXISTING MEZZANINE FLOOR, INCLUDING FLOOR SLAB, FLOOR DECKING, FLOOR JOIST, BEAMS & SUPPORT COLUMNS.
26. REMOVE EXISTING WOOD PANEL AND FURRING.
27. REMOVE PORTION OF EXISTING CONCRETE BLOCK WALL TO ACCOMMODATE NEW DOOR.
28. REMOVE PORTION OF EXISTING CONCRETE CURB TO ACCOMMODATE NEW CONCRETE WALK/DRIVE.
29. REMOVE EXISTING CONCRETE STOOP.
30. REMOVE CEILING GRID AS REQUIRED FOR INSTALLATION OF FIRE SUPRESSION SYSTEM; THE EXTENT OF REMOVAL & REWORK MUST BE COORDINATED WITH FIRE SUPPRESSION PROVIDERS. CONTRACTOR RESPONSIBLE FOR REPAIR OR REPLACEMENT OF CEILING REQUIRED FOR THIS INSTALLATION.
31. REMOVE PORTION OF EXISTING CONCRETE SLAB AS REQUIRED TO ACCOMMODATE CONSTRUCTION OF MASONRY WALL; HATCH AREA IS FOR REFERENCE ONLY. CONTRACTOR TO CONFIRM AMOUNT OF SLAB TO BE REMOVED AND ACCOMMODATE THIS WORK.
32. REMOVE NORTH PORTION OF EXISTING CHAINLINK FENCE AND GATE. REMOVE ALL EXIST. FOOTINGS IN PREPARATION FOR NEW FENCING.
33. REMOVE PORTION OF ROOF DECK AND ROOFING ABOVE TO ACCOMMODATE MECHANICAL ROOF VENTILATOR
34. TEMPORARILY REMOVE HANDRAIL TO ACCOMMODATE NEW FURR-OUT AT EXTERIOR WALL; REPLACE RAIL WHEN FURR-OUT IS COMPLETE

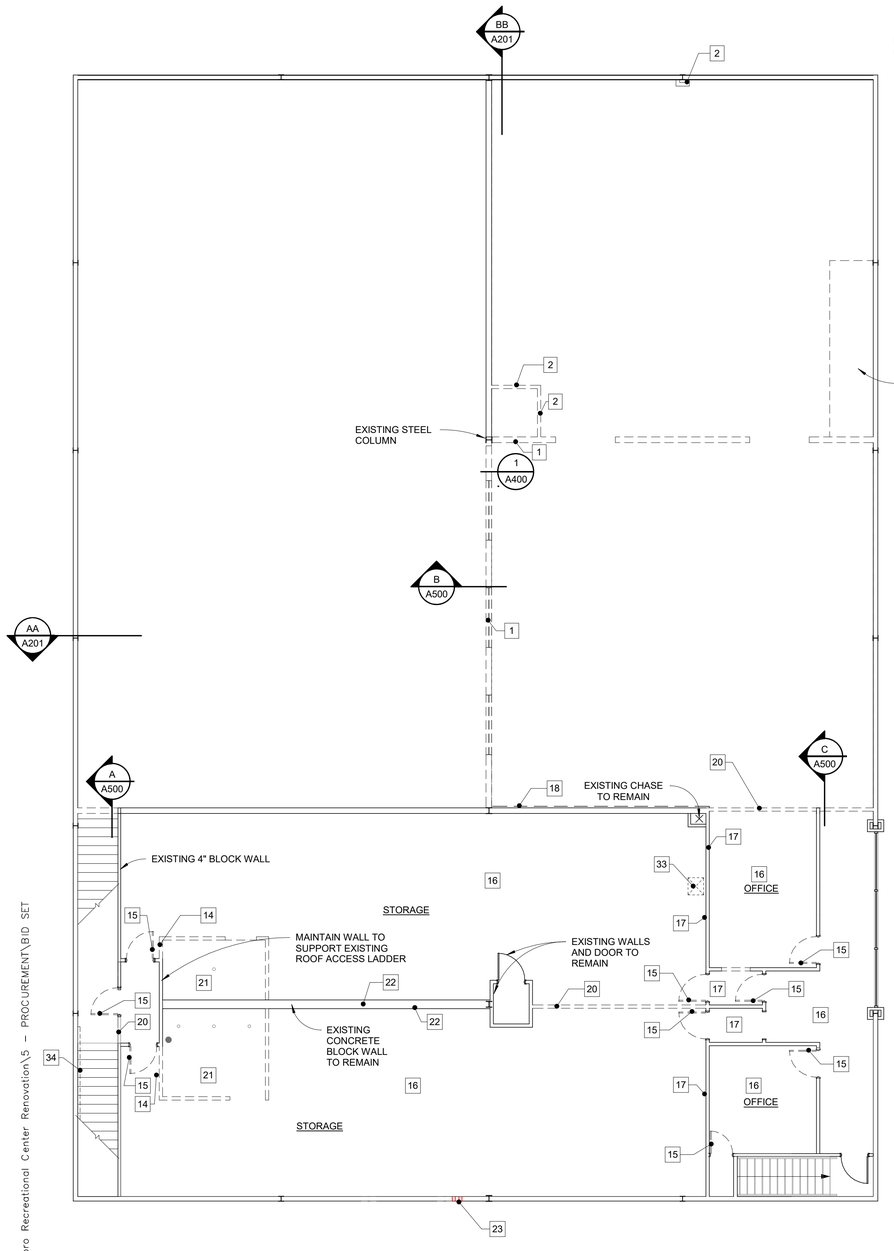

second floor demolition plan

SCALE: 1/8" = 1'-0"

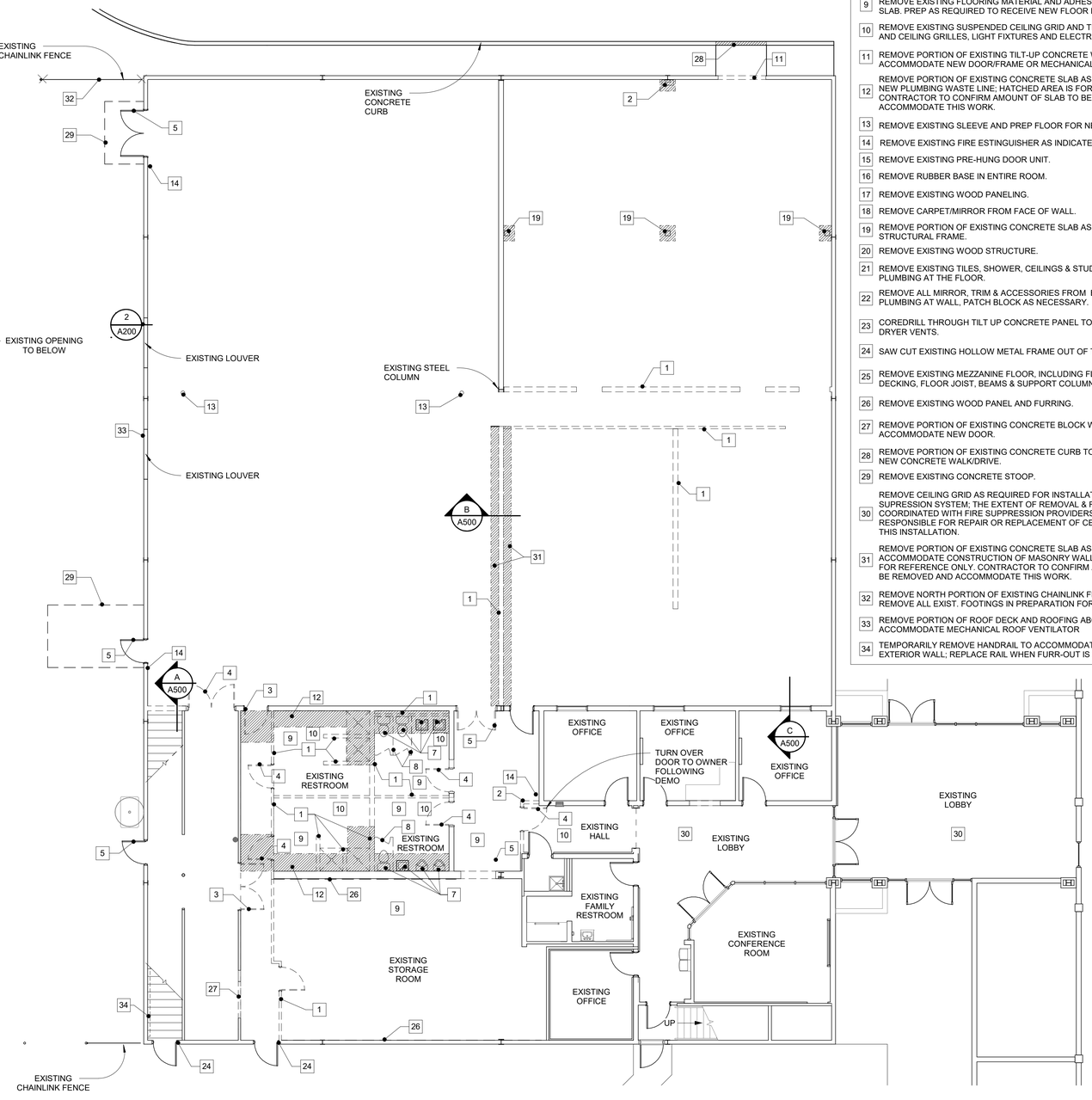

first floor demolition plan

SCALE: 1/8" = 1'-0"

Renovations to Jonesboro Recreational Center

Jonesboro Arkansas Phase II

BRACKETT KRENNERICH architects

100 East Huntington Ave. Suite D P.O. Box 1655
870-932-0571 Fax 870-932-0975
www.bkarchts.com

Revision Schedule				
Tag	Rev. Description	Rev. Date	Issued by	

BRACKETT-KRENNERICH & ASSOCIATES, P.A. REGISTERED ARCHITECTS CIS ARKANSAS

20 February 2022

Commission Number 2127

D100

Date: February 20 2022

FIRST & SECOND FLOOR DEMOLITION PLAN

A:\2127 - Jonesboro Recreational Center Renovation\5 - PROCUREMENT\BID SET
A:\2127 - ...
3/7/2022 9:26:03 AM

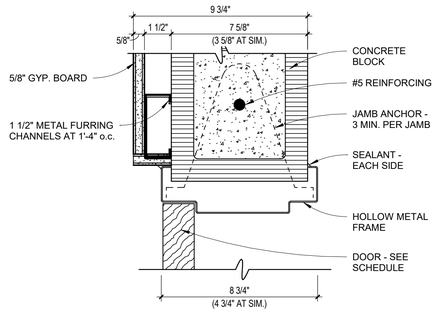

4 jamb detail
SCALE: 3" = 1'-0"

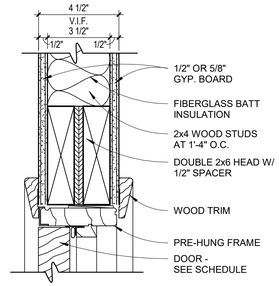

5 head detail
SCALE: 3" = 1'-0"

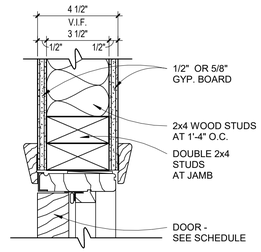

6 jamb detail
SCALE: 3" = 1'-0"

DOOR SCHEDULE										
Door Number	DOOR				DETAILS			Label	HDWE	Remarks
	Type	Style	Threshold	Frame	Head	Jamb	Sill			
105	F	PAIR	----------	EXISTING	---------	--------	--------		5	MODIFY EXISTING FRAME TO ACCEPT NEW DOOR
105A	F	PAIR	----------	EXISTING	3/A001	4/A001	--------		5	MODIFY EXISTING FRAME TO ACCEPT NEW DOOR
105B	B	SINGLE	----------	EXISTING	---------	--------	--------		3	MODIFY EXISTING FRAME TO ACCEPT NEW DOOR
111	C	SINGLE	ALUMINUM	HMF-3	1/A201	2/A201	3/A201		1	
111A	A	PAIR	----------	HMF-2	3/A001 SIM.	4/A001 SIM.	--------		7	
112	A	SINGLE	----------	HMF-1	1/A001	2/A001	--------		11	
112A	A	SINGLE	----------	HMF-1	1/A001	2/A001	--------		10	
113	A	SINGLE	----------	HMF-1	1/A001	2/A001	--------		11	
113A	A	SINGLE	----------	HMF-1	1/A001	2/A001	--------		10	
114	C	SINGLE	ALUMINUM	EXISTING	---------	--------	--------		1	MODIFY EXISTING FRAME TO ACCEPT NEW DOOR
114A	A	PAIR	----------	HMF-2	1/A001	2/A001	--------		6	
115	C	PAIR	ALUMINUM	EXISTING	---------	--------	--------		2	MODIFY EXISTING FRAME TO ACCEPT NEW DOOR
115A	C	SINGLE	ALUMINUM	EXISTING	---------	--------	--------		1	MODIFY EXISTING FRAME TO ACCEPT NEW DOOR
116	C	PAIR	ALUMINUM	HMF-3	1/A201	2/A201	3/A201		1	
201	D	SINGLE	----------	PRE-HUNG	5/A001	6/A001	--------		8	
201A	E	SINGLE	----------	PRE-HUNG	5/A001	6/A001	--------		8	
202	D	SINGLE	----------	PRE-HUNG	5/A001	6/A001	--------		8	
202A	D	SINGLE	----------	PRE-HUNG	5/A001	6/A001	--------		8	
203A	D	PAIR	----------	PRE-HUNG	5A001 SIM.	6/A001 SIM.	--------		9	
203B	D	SINGLE	----------	PRE-HUNG	5A001 SIM.	6/A001 SIM.	--------		8	
205	C	SINGLE	ALUMINUM	HMF-3	1/A201	2/A201	3/A201		1	

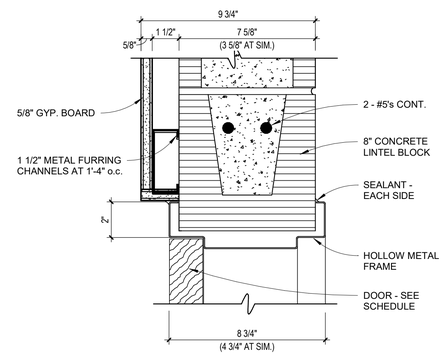

3 head detail
SCALE: 3" = 1'-0"

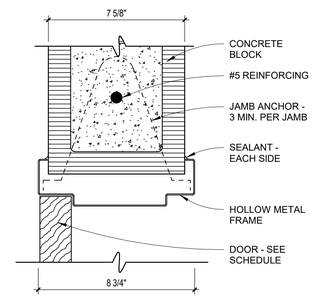

2 jamb detail
SCALE: 3" = 1'-0"

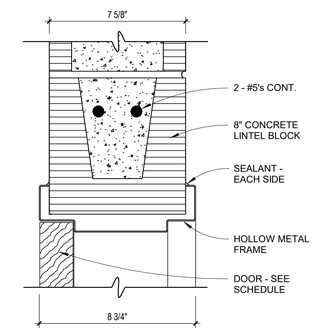

1 head detail
SCALE: 3" = 1'-0"

GLAZING LEGEND

A	1/4" TEMPERED POLISHED PLATE GLASS
B	1" TEMPERED INSULATED POLISHED PLATE GLASS

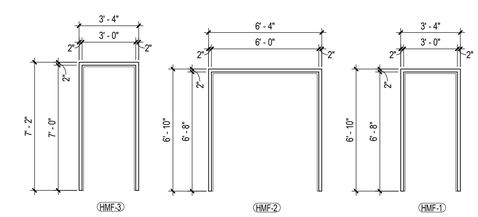

hollow metal frame schedule
1/4" = 1'-0"

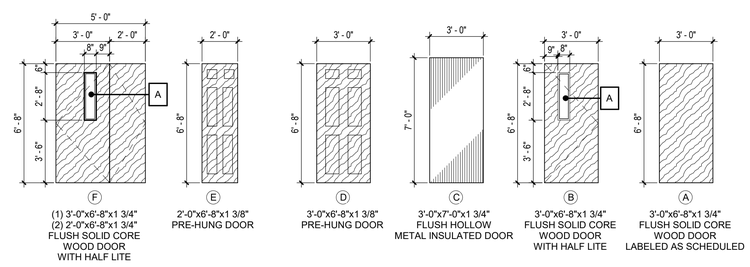

visual door types
1/4" = 1'-0"

Renovations to
Jonesboro Recreational Center
Jonesboro Arkansas
Phase II

BRACKETT KRENNERICH architects
100 East Huntington Ave. Suite D P.O. Box 1655 870-932-0571 Fax 870-932-0975 www.bkarchts.com

Revision Schedule				
Tag	Rev. Description	Rev. Date	issued by	

BRACKETT-KRENNERICH & ASSOCIATES, P.A. REGISTERED ARCHITECTS C13 ARKANSAS
20 February 2022

Commission Number
2127

A001

Date: February 20 2022

DOOR SCHEDULE, VISUAL DOOR TYPES, AND FRAME DETAILS

A:\2127 - Jonesboro Recreational Center Renovation\5 - PROCUREMENT\BID SET
A001.dwg
3/7/2022 9:25:53 AM

FINISH SCHEDULE

Room No.	Room Name	Floor Finish	Base	Wall Finish: North	Wall Finish: East	Wall Finish: South	Wall Finish: West	Ceiling Finish
101A	EXISTING HALL	PORCELAIN TILE	6" PORCELAIN COVE BASE	PAINTED EXISTING [4]	PAINTED EXISTING [4]	PAINTED EXISTING [4]	---------	2x2 SUSP. ACOUSTICAL CEILING, TYPE A / PAINT BULKHEAD
105	CORRIDOR	PORCELAIN TILE	6" PORCELAIN COVE BASE	PAINTED CONC. BLOCK	PAINTED CONCRETE BLOCK / PAINTED GYP. BOARD	PAINTED CONCRETE BLOCK	PAINTED CONCRETE BLOCK	EXISTING
110-2	STAIR LANDING	VCT	4" RUBBER BASE	PAINTED CMU, PAINTED GYP. BOARD	PAINTED CONC. WALL PANEL	PAINTED CONC. WALL PANEL	PAINTED GYP. BOARD	2x2 SUSP. ACOUSTICAL CEILING
111	MULTI-PURPOSE ROOM	PORCELAIN TILE	6" PORCELAIN COVE BASE	PAINTED GYP. BOARD	PAINTED CONCRETE BLOCK / PAINTED GYP. BOARD	PAINTED GYP. BOARD	PAINTED GYP. BOARD	2x2 SUSP. ACOUSTICAL CEILING, TYPE A
111A	STORAGE	SEALED CONCRETE	4" RUBBER BASE	PAINTED GYP. BOARD	PAINTED CONCRETE BLOCK	PAINTED CONC. WALL PANEL	PAINTED CONCRETE BLOCK	2x2 SUSP. ACOUSTICAL CEILING, TYPE A
112	MEN'S TOILET	PORCELAIN TILE	6" PORCELAIN COVE BASE	EPOXY WAINSCOT / EPOXY COATED CONC. BLOCK	EPOXY WAINSCOT / EPOXY COATED CONCRETE BLOCK	EPOXY WAINSCOT / EPOXY COATED CONCRETE BLOCK	EPOXY WAINSCOT / EPOXY COATED CONCRETE BLOCK	2x2 SUSP. ACOUSTICAL CEILING, TYPE B
112A	MEN'S SHOWER	PORCELAIN TILE	6" PORCELAIN COVE BASE	EPOXY WAINSCOT / EPOXY COATED CONC. BLOCK [3]	EPOXY WAINSCOT / EPOXY COATED CONCRETE BLOCK [3]	EPOXY WAINSCOT / EPOXY COATED CONCRETE BLOCK [3]	EPOXY WAINSCOT / EPOXY COATED CONCRETE BLOCK [3]	EPOXY COATED GYP. BOARD
112B	SHOWER	MOSAIC TILE	6" PORCELAIN COVE BASE	PORCELAIN TILE	PORCELAIN TILE	PORCELAIN TILE	PORCELAIN TILE	EPOXY COATED GYP. BOARD
113	WOMEN'S TOILET	PORCELAIN TILE	6" PORCELAIN COVE BASE	EPOXY WAINSCOT / EPOXY COATED CONC. BLOCK	EPOXY WAINSCOT / EPOXY COATED CONCRETE BLOCK	EPOXY WAINSCOT / EPOXY COATED CONCRETE BLOCK	EPOXY WAINSCOT / EPOXY COATED CONCRETE BLOCK	2x2 SUSP. ACOUSTICAL CEILING, TYPE B
113A	WOMEN'S SHOWER	PORCELAIN TILE	6" PORCELAIN COVE BASE	EPOXY WAINSCOT / EPOXY COATED CONC. BLOCK [3]	EPOXY WAINSCOT / EPOXY COATED CONCRETE BLOCK [3]	EPOXY WAINSCOT / EPOXY COATED CONCRETE BLOCK [3]	EPOXY WAINSCOT / EPOXY COATED CONCRETE BLOCK [3]	EPOXY COATED GYP. BOARD
113B	SHOWER	MOSAIC TILE	6" PORCELAIN COVE BASE	PORCELAIN TILE	PORCELAIN TILE	PORCELAIN TILE	PORCELAIN TILE	EPOXY COATED GYP. BOARD
114	EXISTING MECHANICAL / STORAGE	EXISTING	4" RUBBER BASE	PAINTED CONC. BLOCK	PAINTED CONCRETE BLOCK	PAINTED GYP. BOARD	PAINTED CONCRETE BLOCK	EXISTING
115	BASKETBALL COURT	RUBBER SPORTS COURT	6" RUBBER BASE	PAINTED CONC. WALL PANEL [6]	PAINTED CONCRETE BLOCK [6]	PAINTED CONCRETE BLOCK [6]	PAINTED CONC. WALL PANEL [6]	EXPOSED TO STRUCTURE - PAINT
116	SOCCER FIELD	TURF	6" RUBBER BASE	PAINTED CONC. WALL PANEL [6]	PAINTED CONC. WALL PANEL [6]	PAINTED CONCRETE BLOCK [6]	PAINTED CONCRETE BLOCK [6]	EXPOSED TO STRUCTURE - PAINT
200	CORRIDOR	VCT	4" RUBBER BASE	PAINTED GYP. BOARD	PAINTED CONC. WALL PANEL	PAINTED GYP. BOARD	PAINTED GYP. BOARD	2x2 SUSP. ACOUSTICAL CEILING, TYPE A
200A	ANTE	VCT	4" RUBBER BASE	PAINTED GYP. BOARD	PAINTED GYP. BOARD	PAINTED GYP. BOARD	PAINTED GYP. BOARD	2x2 SUSP. ACOUSTICAL CEILING, TYPE A
201	OFFICE	MODULAR CARPET	4" RUBBER BASE	PAINTED GYP. BOARD	PAINTED GYP. BOARD	PAINTED CONCRETE BLOCK	PAINTED GYP. BOARD	2x2 SUSP. ACOUSTICAL CEILING, TYPE A
201A	CLOSET	MODULAR CARPET	4" RUBBER BASE	PAINTED CONC. BLOCK	PAINTED GYP. BOARD	PAINTED CONC. WALL PANEL	PAINTED GYP. BOARD	2x2 SUSP. ACOUSTICAL CEILING, TYPE A
202	OFFICE	MODULAR CARPET	4" RUBBER BASE	PAINTED GYP. BOARD	PAINTED GYP. BOARD	PAINTED GYP. BOARD	PAINTED GYP. BOARD	2x2 SUSP. ACOUSTICAL CEILING, TYPE A
202A	CLOSET	VCT	4" RUBBER BASE	PAINTED GYP. BOARD	PAINTED GYP. BOARD	PAINTED GYP. BOARD	PAINTED GYP. BOARD	2x2 SUSP. ACOUSTICAL CEILING, TYPE A
203	STORAGE	VCT	4" RUBBER BASE	PAINTED CONC. BLOCK	PAINTED GYP. BOARD	PAINTED GYP. BOARD	PAINTED GYP. BOARD/ PAINTED CONC. BLOCK	2x2 SUSP. ACOUSTICAL CEILING, TYPE A
203A	MECH.	VCT	4" RUBBER BASE	PAINTED CONC. BLOCK	PAINTED WD. PANELING	PAINTED GYP. BOARD	PAINTED GYP. BOARD	EXPOSED TO STRUCTURE
204	STORAGE	VCT	4" RUBBER BASE	PAINTED GYP. BOARD	PAINTED GYP. BOARD	PAINTED GYP. BOARD	PAINTED GYP. BOARD	2x2 SUSP. ACOUSTICAL CEILING, TYPE A
204A	ELECTRICAL CLOSET	VCT	4" RUBBER BASE	PAINTED GYP. BOARD	PAINTED GYP. BOARD	PAINTED GYP. BOARD	PAINTED GYP. BOARD	2x2 SUSP. ACOUSTICAL CEILING, TYPE A
204B	ROOF HATCH	VCT	4" RUBBER BASE	PAINTED GYP. BOARD	PAINTED GYP. BOARD	PAINTED GYP. BOARD	PAINTED CONCRETE BLOCK	2x2 SUSP. ACOUSTICAL CEILING, TYPE A / PAINT BULKHEAD
205	STAIR	RUBBER STAIR TREADS AND RISERS	4" RUBBER BASE	---------	PAINTED GYP. BOARD	PAINTED CONC. WALL PANEL	PAINTED CONC. WALL PANEL	2x2 SUSP. ACOUSTICAL CEILING, TYPE A
205A	STORAGE	VCT	4" RUBBER BASE	PAINTED CONC. BLOCK	PAINTED GYP. BOARD / PAINTED CONC. BLOCK	--------	PAINTED CONC. WALL PANEL	2x2 SUSP. ACOUSTICAL CEILING, TYPE A

FINISH NOTES

[1] PAINT EXPOSED STRUCTURE AND DECK. ALL EXPOSED PIPING, CONDUITS AND MECHANICAL DUCTS TO BE PAINTED. PAINT COLOR TO BE AS SELECTED BY ARCHITECT.

[2] INSTALL RUBBER STAIR TREADS AND RISERS AT STAIRS. PROVIDE RUBBER TILE AT LANDING TO MATCH STAIR TREADS, UNLESS NOTED OTHERWISE.

[3] INSTALL 6"X24" WALL TILE ON ALL WALLS IN SHOWER 112B AND SHOWER 113B.

[4] PAINT EXISTING WALL AND INSTALL NEW RUBBER BASE IN EXISTING HALL 101A. REFER TO FINISH SCHEDULE FOR LOCATION.

[5] PAINT BOTH SIDES, EXTERIOR AND INTERIOR, OF THE HOLLOW METAL FRAMES WHERE NEW HOLLOW METAL FRAME OR NEW DOORS ARE REQUIRED.

[6] WALLS TO RECIEVE ACRYLIC COATING AS SPECIFIED IN SECTION 09 9667.

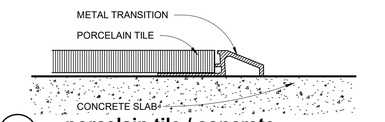

6 **porcelain tile / concrete**
SCALE: 1 : 1

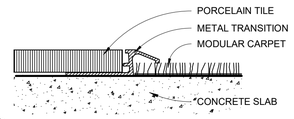

3 **porcelain tile / carpet**
SCALE: 1 : 1

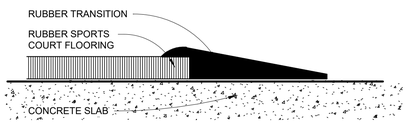

8 **rubber sports court flooring / concrete**
SCALE: 1 : 1

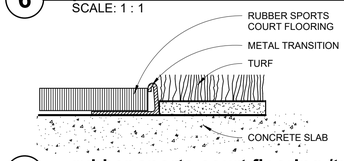

5 **rubber sports court flooring /turf**
SCALE: 1 : 1

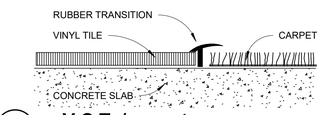

2 **V.C.T. / carpet**
SCALE: 1 : 1

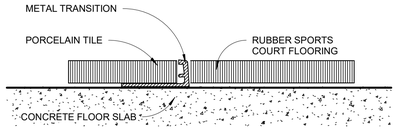

7 **rubber sports court flooring / porcelain tile**
SCALE: 1 : 1

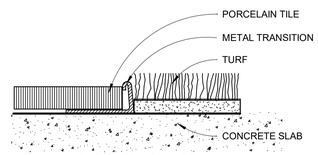

4 **porcelain tile /turf**
SCALE: 1 : 1

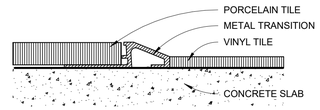

1 **porcelain tile / vinyl tile**
SCALE: 1 : 1

FINISH LEGEND

- EXISTING
- MODULAR CARPET
- MOSAIC TILE(T-02)
- PORCELAIN WALL TILE (T-03)
- PORCELAIN TILE (T-01A)
- PORCELAIN TILE 2 (T-01B)
- RUBBER SPORTS COURT
- RUBBER STAIR TREADS AND RISERS
- SEALED CONCRETE
- TURF
- VCT

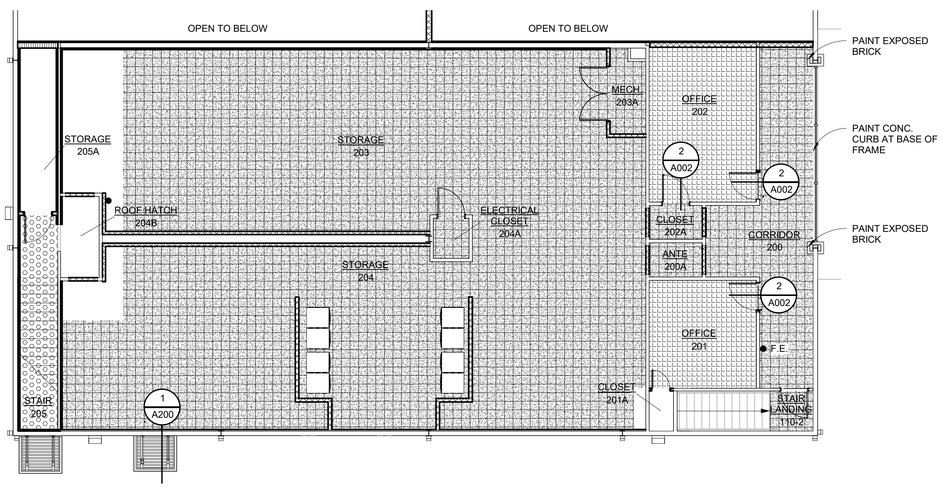

n

second floor plan
SCALE: 1/8" = 1'-0"

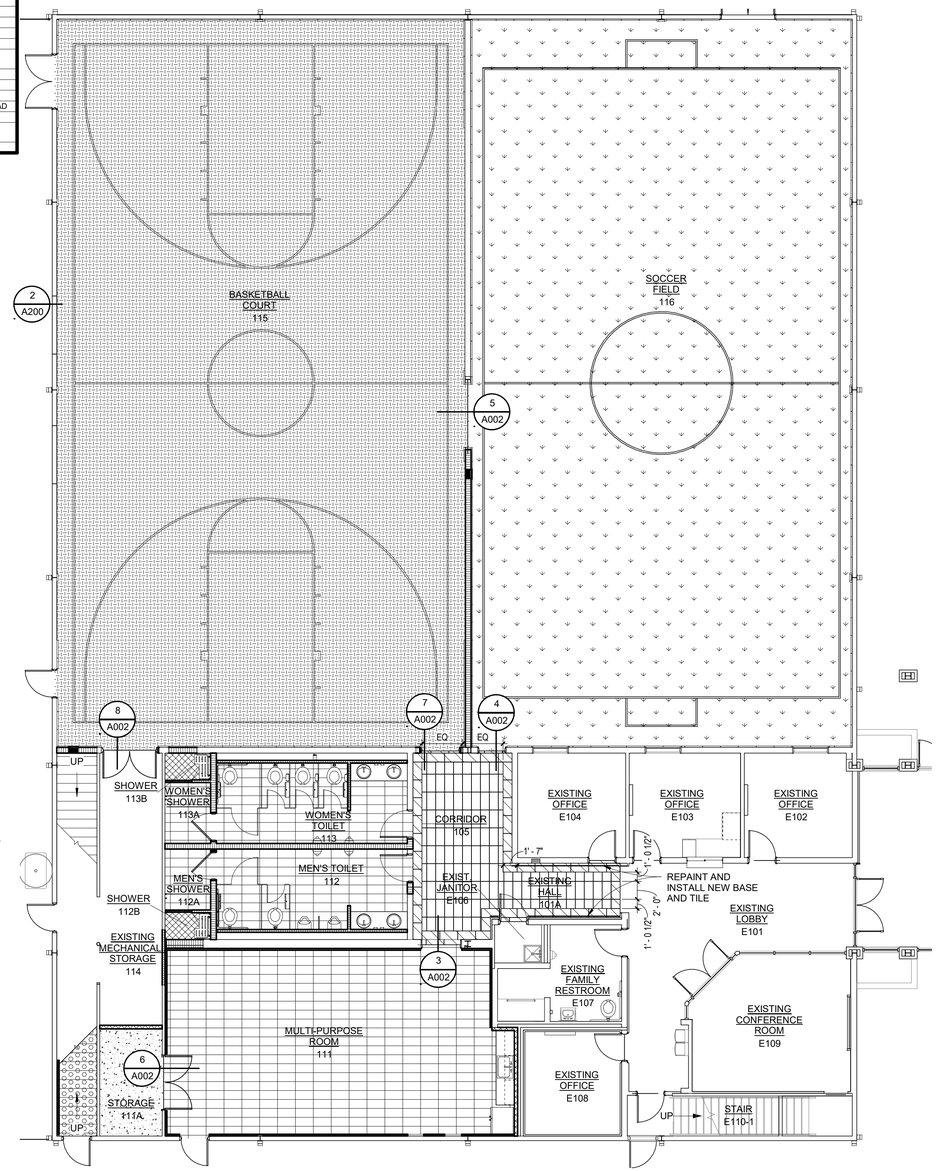

n

finish floor plan
SCALE: 1/8" = 1'-0"

Renovations to Jonesboro Recreational Center
Jonesboro Arkansas
Phase II

BRACKETT KRENNERICH architects

100 East Huntington Ave. Suite D P.O. Box 1655 870-932-0571 Fax 870-932-0975 www.bkarchts.com

Revision Schedule				
Tag	Rev. Description	Rev. Date	Issued by	

BRACKETT-KRENNERICH & ASSOCIATES, P.A. REGISTERED ARCHITECTS CLG ARKANSAS

20 February 2022

Commission Number 2127

A002

Date: February 20 2022

FINISH FLOOR PLAN AND SCHEDULE

A:\2127 - Jonesboro Recreational Center Renovation\5 - PROCUREMENT\BID SET
2127
3/7/2022 9:25:56 AM

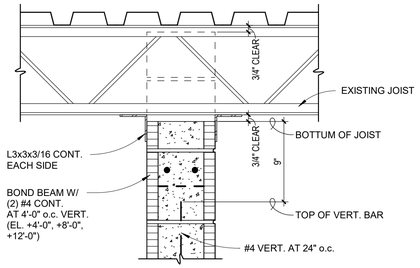

4 **detail**
SCALE: 1 1/2" = 1'-0"

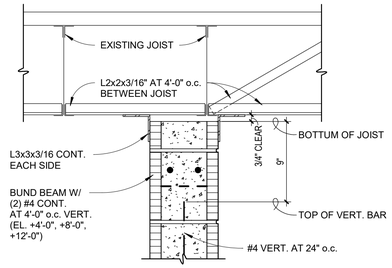

3 **detail**
SCALE: 1 1/2" = 1'-0"

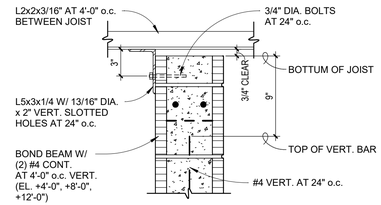

2 **detail**
SCALE: 1 1/2" = 1'-0"

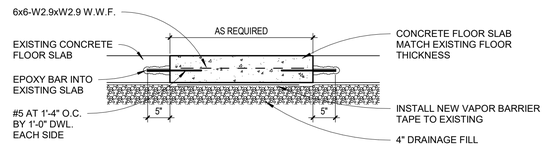

1 **slab repair detail**
SCALE: 3/4" = 1'-0"

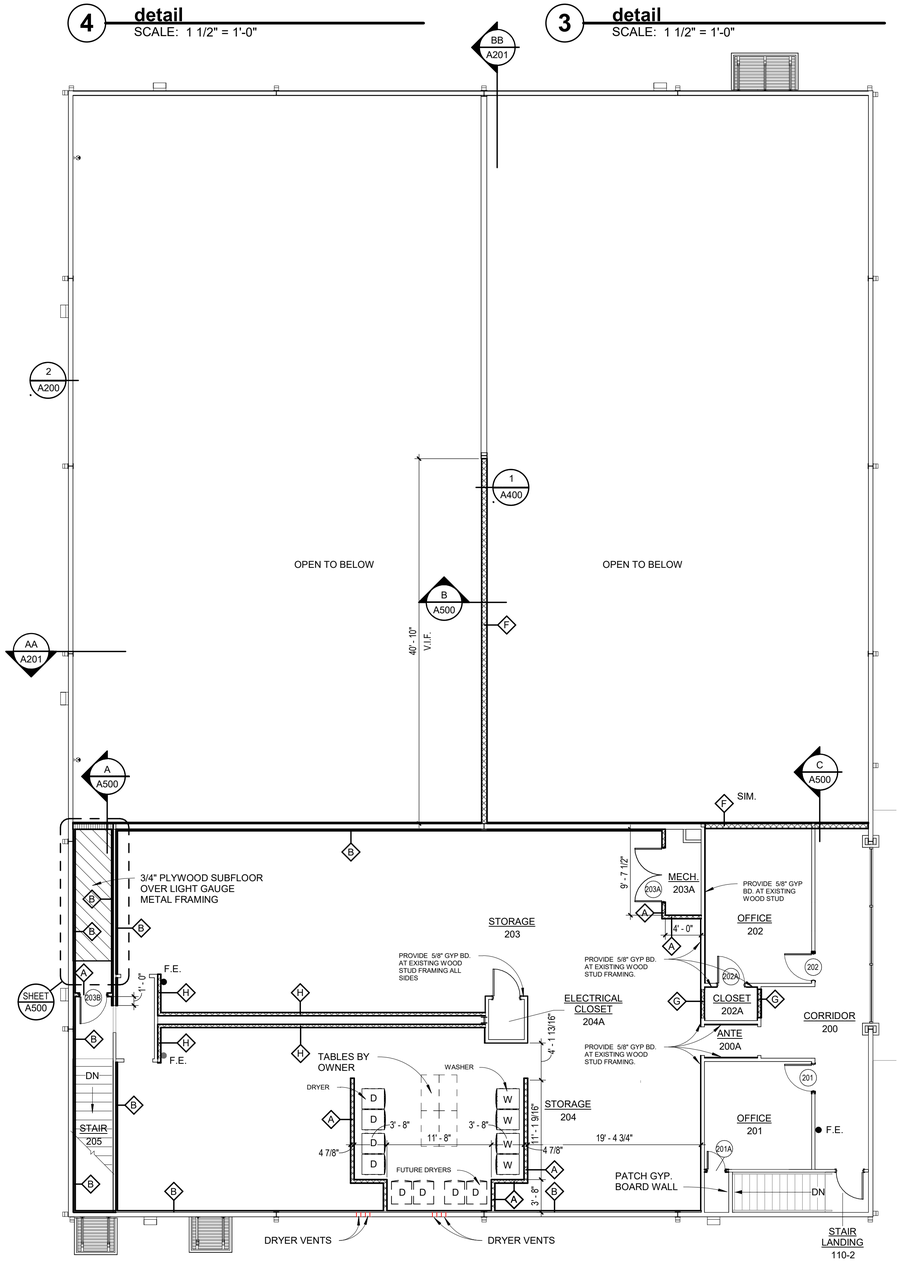

second floor plan
SCALE: 1/8" = 1'-0"

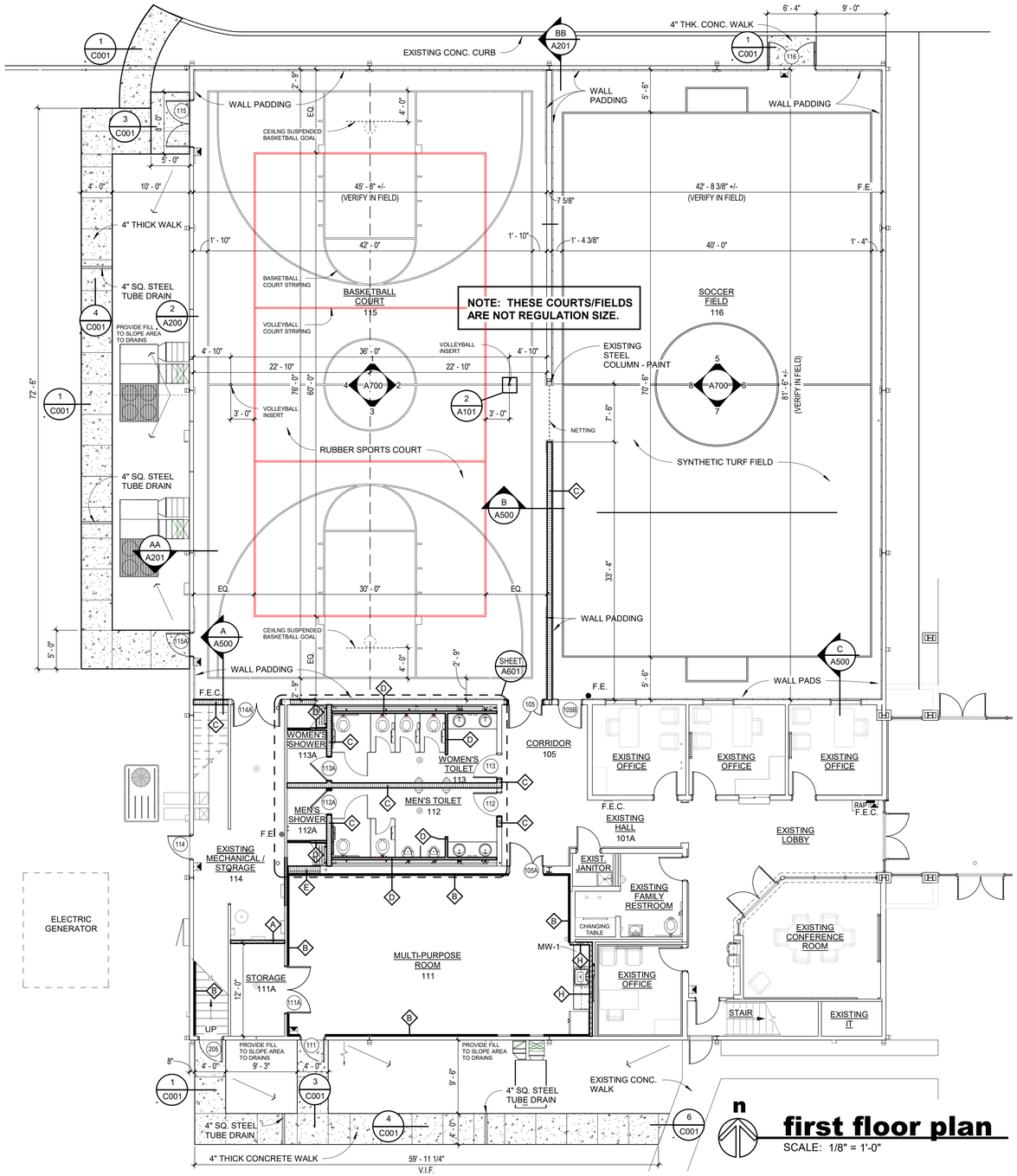

first floor plan
SCALE: 1/8" = 1'-0"

Renovations to
Jonesboro Recreational Center
Jonesboro Arkansas
Phase II

BRACKETT KRENNERICH architects
100 East Huntington Ave. Suite D P.O. Box 1655
870-932-0571 Fax 870-932-0975
www.bkarchts.com

Tag	Rev. Description	Rev. Date	Issued by

Revision Schedule

BRACKETT-KRENNERICH & ASSOCIATES, P.A. REGISTERED ARCHITECTS CIG ARKANSAS
20 February 2022

Commission Number 2127

A100

Date: February 20 2022

FIRST FLOOR PLAN, SECOND FLOOR PLAN

A:\2127 - Jonesboro Recreational Center Renovation\5 - PROCUREMENT\BID SET
A100.dwg
3/7/2022 9:25:57 AM

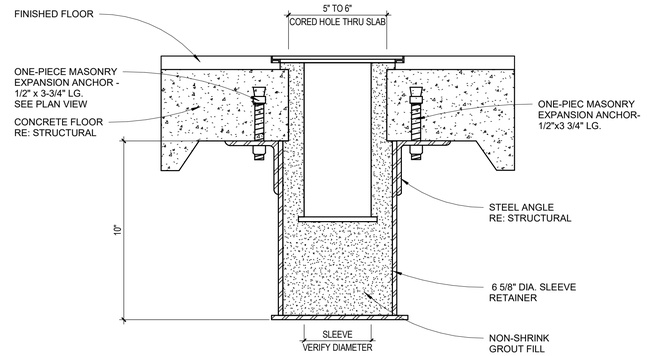

1 sleeve insert detail
SCALE: 3" = 1'-0"

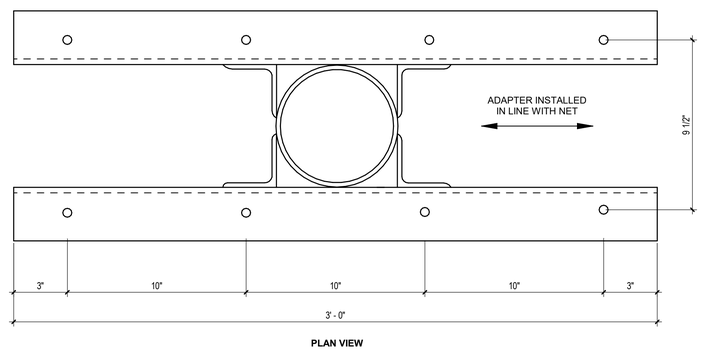

2 plan at sleeve insert
SCALE: 3" = 1'-0"

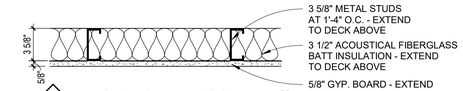

H interior partition wall
SCALE: 1 1/2" = 1'-0"

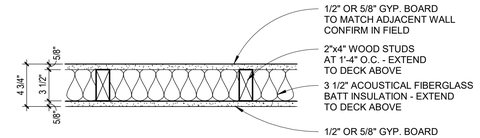

G furring at existing wall
SCALE: 1 1/2" = 1'-0"

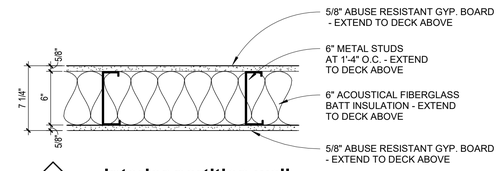

F interior partition wall
SCALE: 1 1/2" = 1'-0"

NOTE:

REFER TO DETAILS ON SHEET A100 FOR TERMINATION OF BLOCK WALLS AT FLOOR/ROOF DECK ABOVE

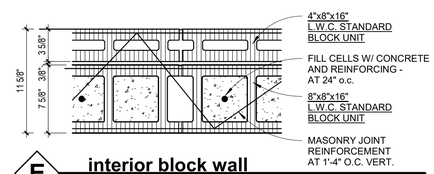

E interior block wall
SCALE: 1 1/2" = 1'-0"

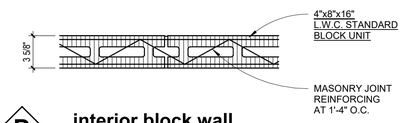

D interior block wall
SCALE: 1 1/2" = 1'-0"

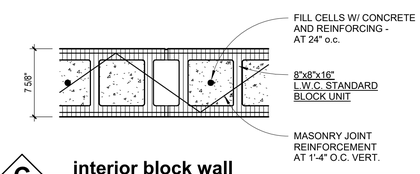

C interior block wall
SCALE: 1 1/2" = 1'-0"

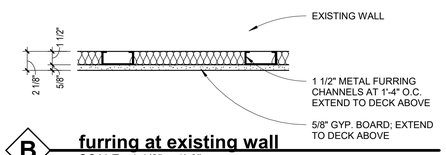

B furring at existing wall
SCALE: 1 1/2" = 1'-0"

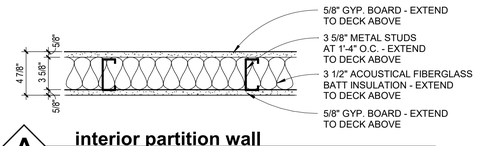

A interior partition wall
SCALE: 1 1/2" = 1'-0"

Renovations to Jonesboro Recreational Center
Jonesboro Arkansas Phase II

BRACKETT KRENNERICH architects

100 East Huntington Ave. Suite D P.O. Box 1655 870-932-0571 Fax 870-932-0975 www.bkarchts.com

Revision Schedule			
Tag	Rev. Description	Rev. Date	Issued by

BRACKETT-KRENNERICH & ASSOCIATES, P.A. REGISTERED ARCHITECTS C13 ARKANSAS

20 February 2022

Commission Number 2127

A101

Date: February 20 2022

VISUAL WALL TYPES AND PLAN DETAILS

A:\2127 – Jonesboro Recreational Center Renovation\5 – PROCUREMENT\BID SET
2022\A101.dwg
3/7/2022 9:25:57 AM

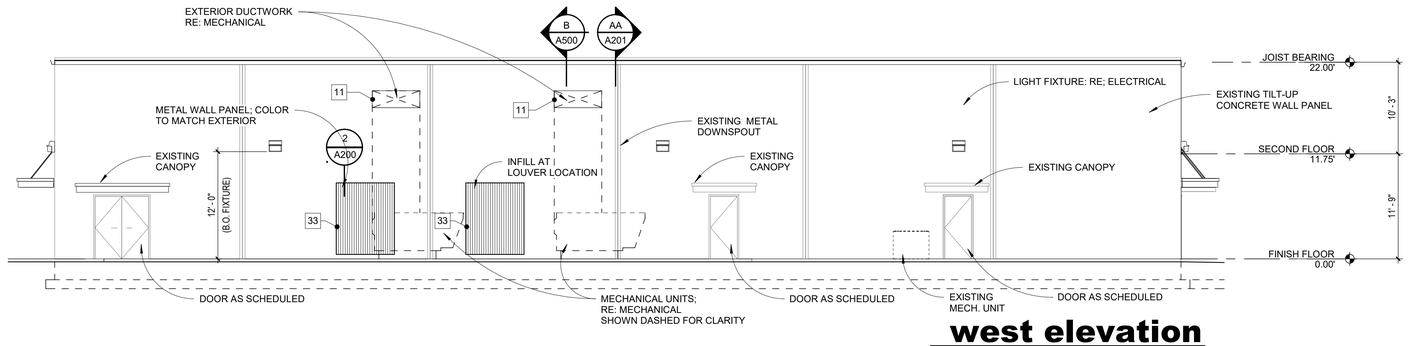

west elevation

SCALE: 1/8" = 1'-0"

NOTE:

ALL CUT OPENINGS AND PENETRATIONS THROUGH EXTERIOR WALL MUST BE COORDINATED WITH ARCHITECT IN THE FIELD PRIOR TO CUTTING.

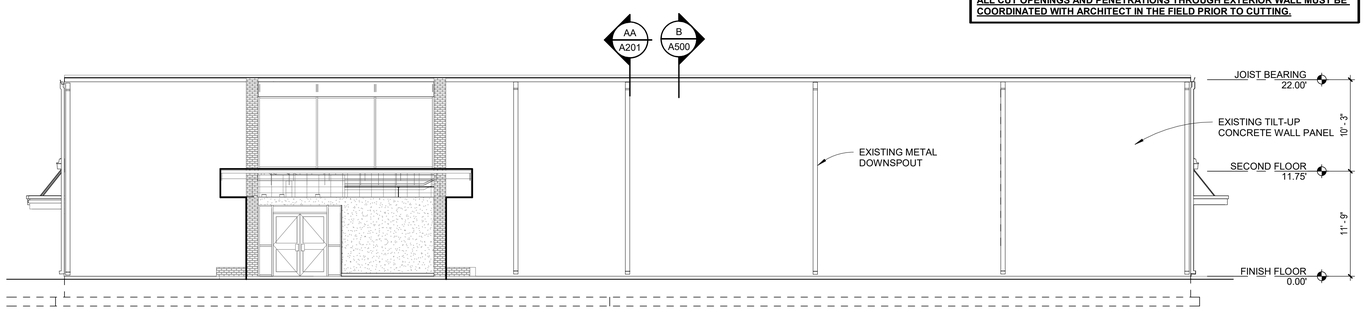

east elevation

SCALE: 1/8" = 1'-0"

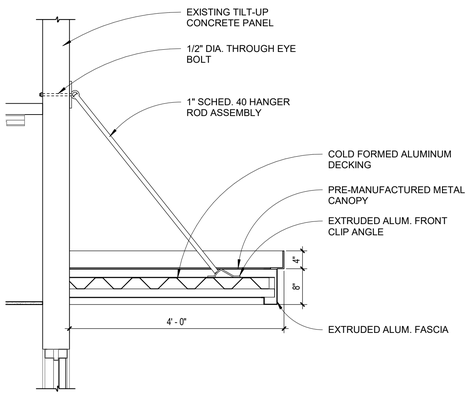

1 canopy section

SCALE: 3/4" = 1'-0"

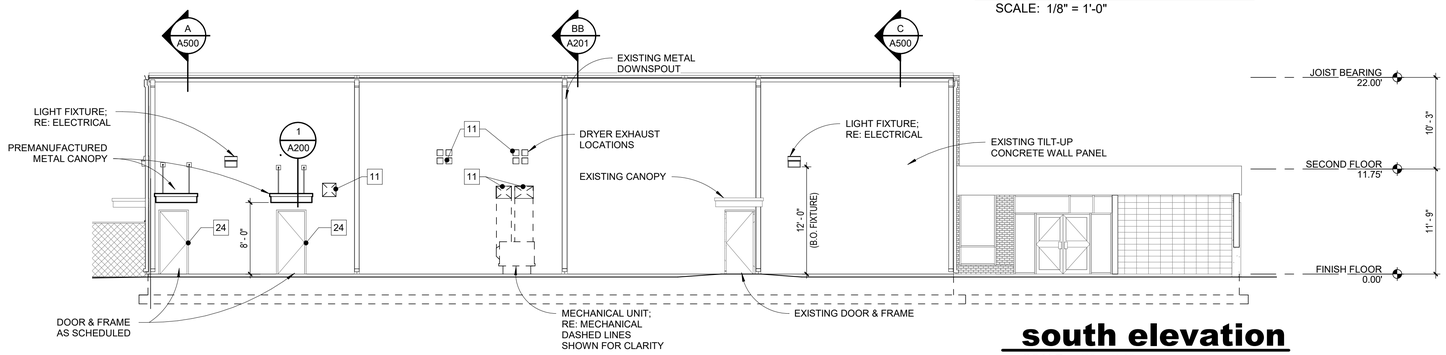

south elevation

SCALE: 1/8" = 1'-0"

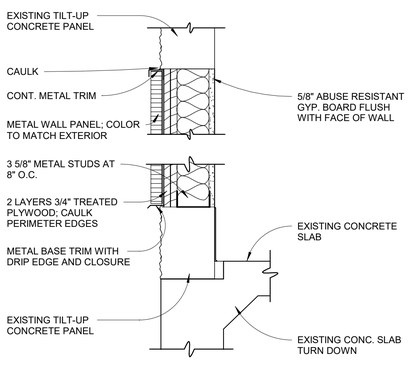

2 exterior wall infill section

SCALE: 1 1/2" = 1'-0"

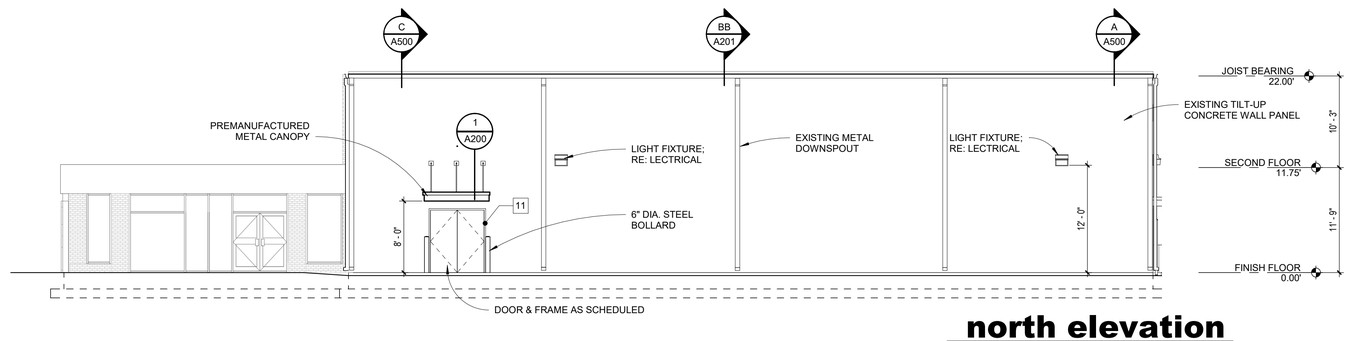

north elevation

SCALE: 1/8" = 1'-0"

Renovations to Jonesboro Recreational Center

Jonesboro Arkansas
Phase II

BRACKETT KRENNERICH architects

100 East Huntington Ave. Suite D P.O. Box 1655 870-932-0571 Fax 870-932-0975 www.bkarchts.com

Revision Schedule			
Tag	Rev. Description	Rev. Date	Issued by

BRACKETT-KRENNERICH & ASSOCIATES, P.A. REGISTERED ARCHITECTS CIG ARKANSAS

20 February 2022

Commission Number 2127

A200

Date: February 20 2022

BUILDING ELEVATIONS

A:\2127 - Jonesboro Recreational Center Renovation\5 - PROCUREMENT\BID SET
A200.dwg
3/7/2022 9:25:58 AM

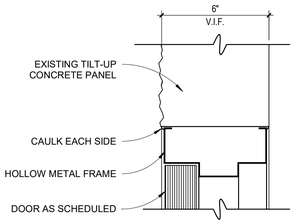

1 exterior hmf head detail
SCALE: 3" = 1'-0"

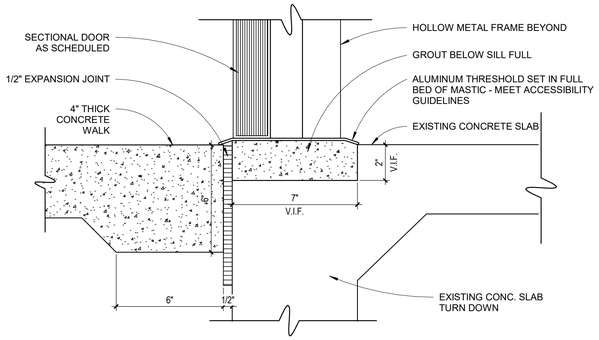

2 exterior hmf sill detail
SCALE: 3" = 1'-0"

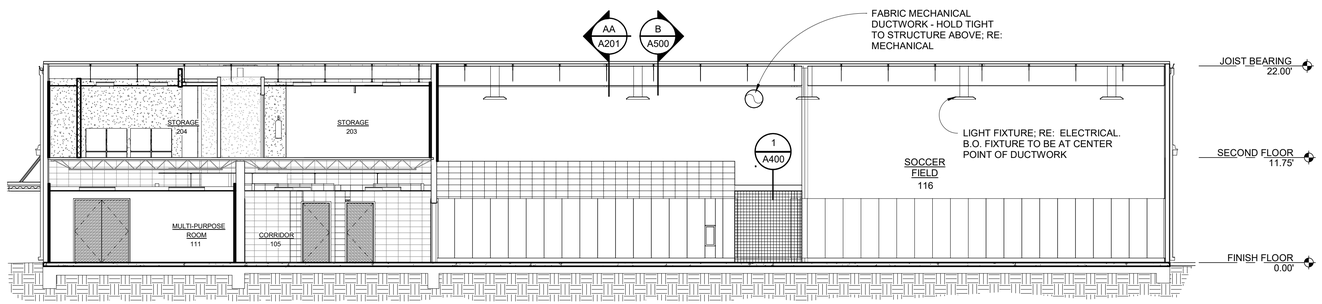

section BB
SCALE: 1/8" = 1'-0"

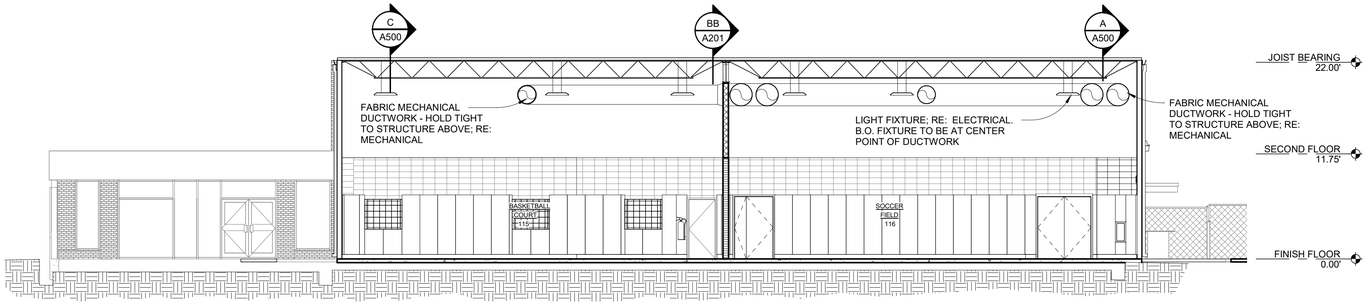

section AA
SCALE: 1/8" = 1'-0"

Renovations to Jonesboro Recreational Center

Jonesboro Arkansas Phase II

BRACKETT KRENNERICH architects

100 East Huntington Ave. Suite D P.O. Box 1655 870-932-0571 Fax 870-932-0975 www.bkarchts.com

Revision Schedule			
Tag	Rev. Description	Rev. Date	issued by

BRACKETT-KRENNERICH & ASSOCIATES, P.A. REGISTERED ARCHITECTS C13 ARKANSAS

20 February 2022

Commission Number 2127

A201

Date: February 20 2022

BUILDING SECTIONS

A:\2127 - Jonesboro Recreational Center Renovation\5 - PROCUREMENT\BID SET
A201.dwg
3/7/2022 9:33:19 AM

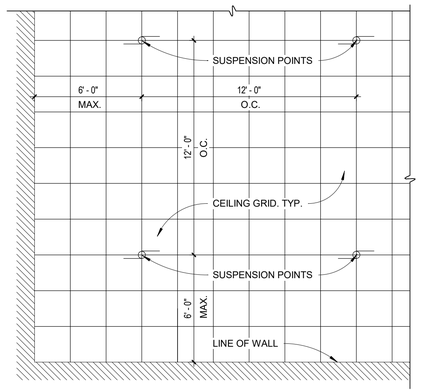

plan view

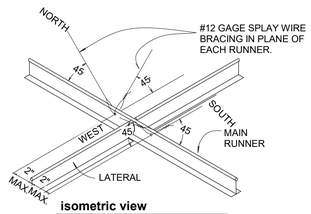

isometric view

NO SCALE

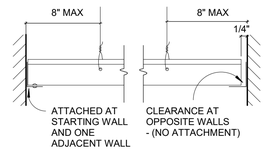

runners at walls

NO SCALE

6 seismic detail

SCALE: 1/4" = 1'-0"

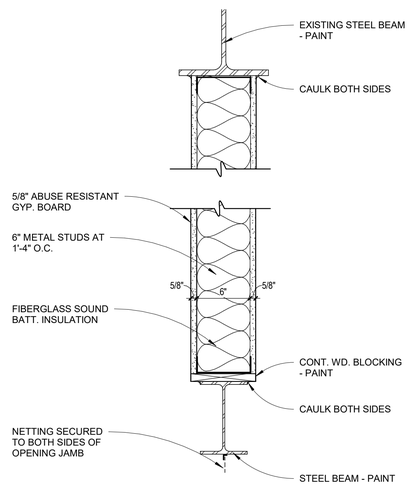

1 bulkhead detail

SCALE: 1 1/2" = 1'-0"

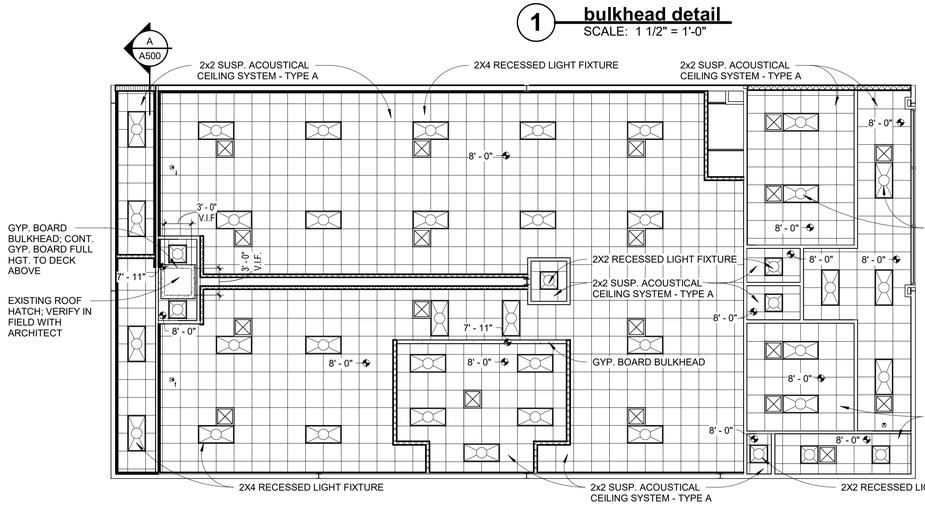

second floor reflected ceiling plan

SCALE: 1/8" = 1'-0"

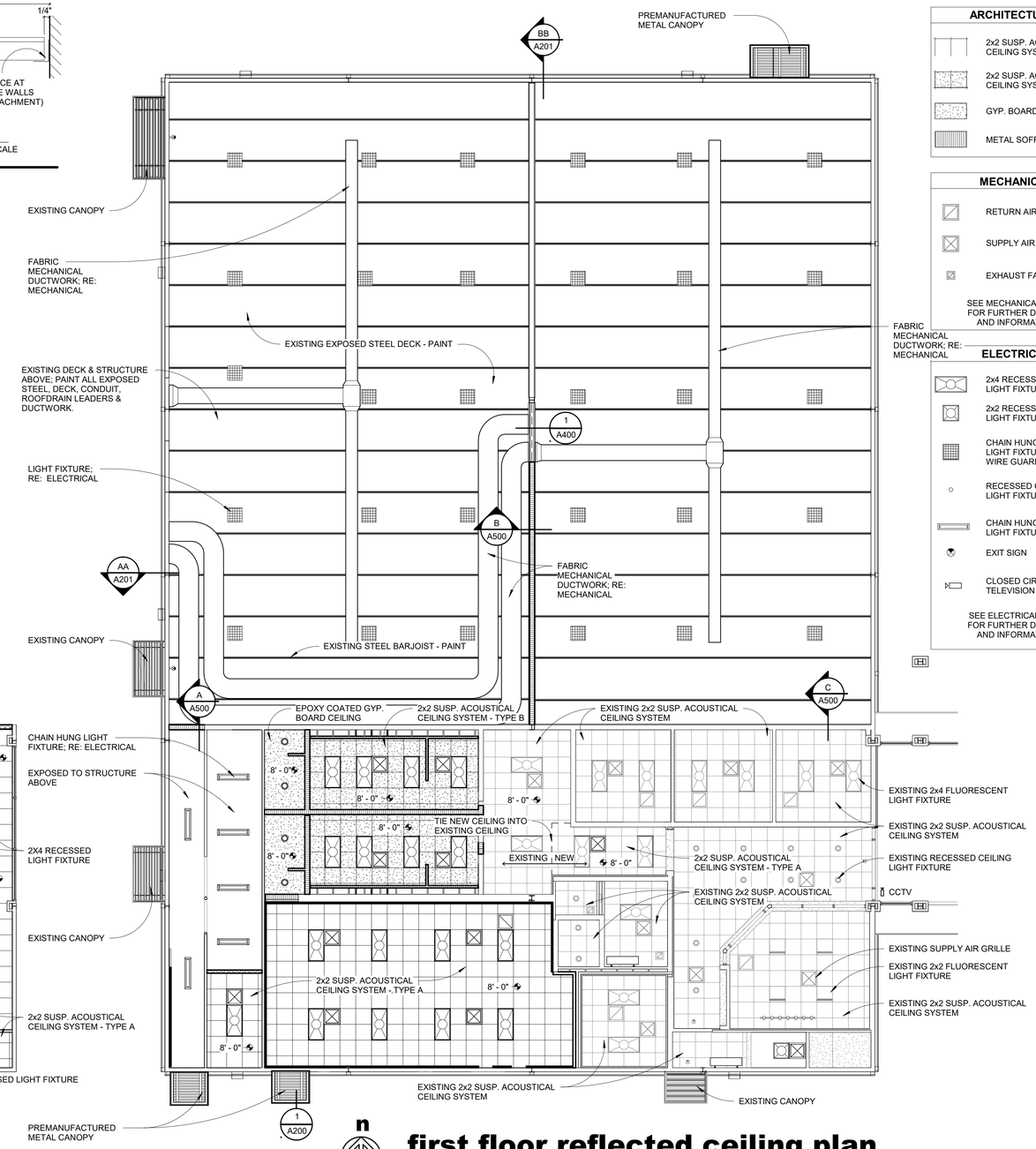

first floor reflected ceiling plan

SCALE: 1/8" = 1'-0"

ARCHITECTURAL

- 2x2 SUSP. ACOUSTICAL CEILING SYSTEM-TYPE A
- 2x2 SUSP. ACOUSTICAL CEILING SYSTEM-TYPE B
- GYP. BOARD
- METAL SOFFIT

MECHANICAL

- RETURN AIR GRILLE
- SUPPLY AIR GRILLE
- EXHAUST FAN

SEE MECHANICAL PLAN FOR FURTHER DETAILS AND INFORMATION

ELECTRICAL

- 2x4 RECESS LIGHT FIXTURE
- 2x2 RECESS LIGHT FIXTURE
- CHAIN HUNG LED LIGHT FIXTURE W/ WIRE GUARD
- RECESSED CEILING LIGHT FIXTURE
- CHAIN HUNG LIGHT FIXTURE
- EXIT SIGN
- CLOSED CIRCUIT TELEVISION

SEE ELECTRICAL PLAN FOR FURTHER DETAILS AND INFORMATION

Renovations to Jonesboro Recreational Center

Jonesboro Arkansas Phase II

BRACKETT KRENNERICH architects

100 East Huntington Ave. Suite D P.O. Box 1655 870-932-0571 Fax 870-932-0975 www.bkarchts.com

Revision Schedule				
Tag	Rev. Description	Rev. Date	Issued by	

BRACKETT-KRENNERICH & ASSOCIATES, P.A. REGISTERED ARCHITECTS CIS ARKANSAS

20 February 2022

Commission Number 2127

A400

Date: February 20 2022

REFLECTED CEILING PLANS, CEILING DETAILS

A:\2127 - Jonesboro Recreational Center Renovation\5 - PROCUREMENT\BID SET
A400.dwg
3/7/2023 9:26:00 AM

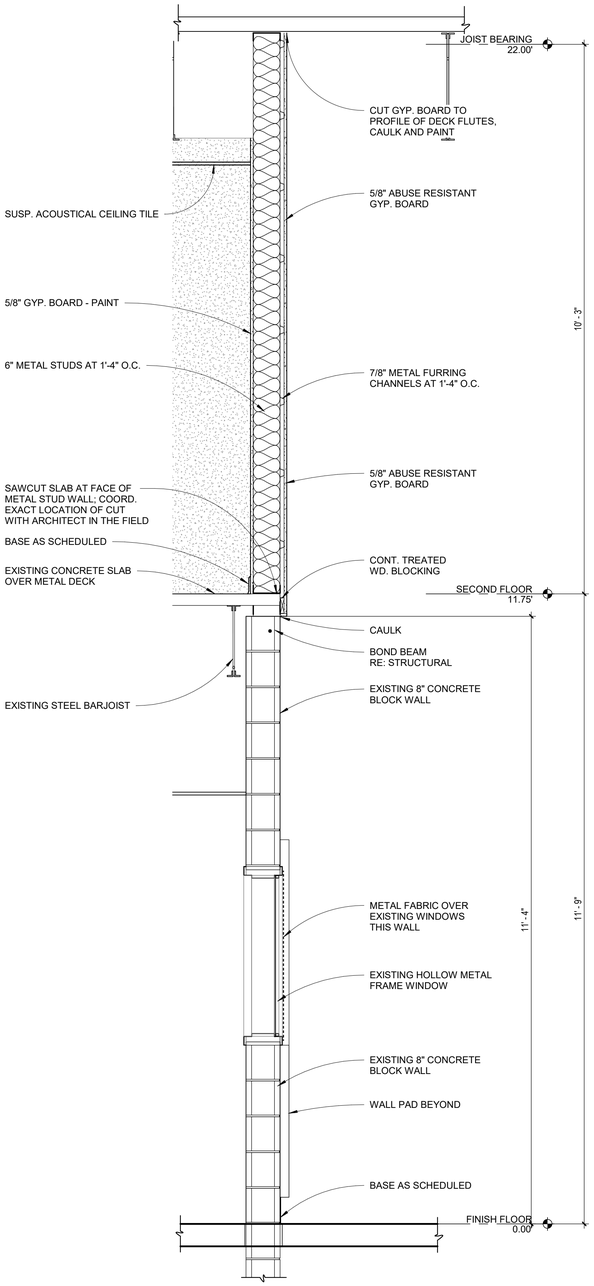

C wall section
SCALE: 3/4" = 1'-0"

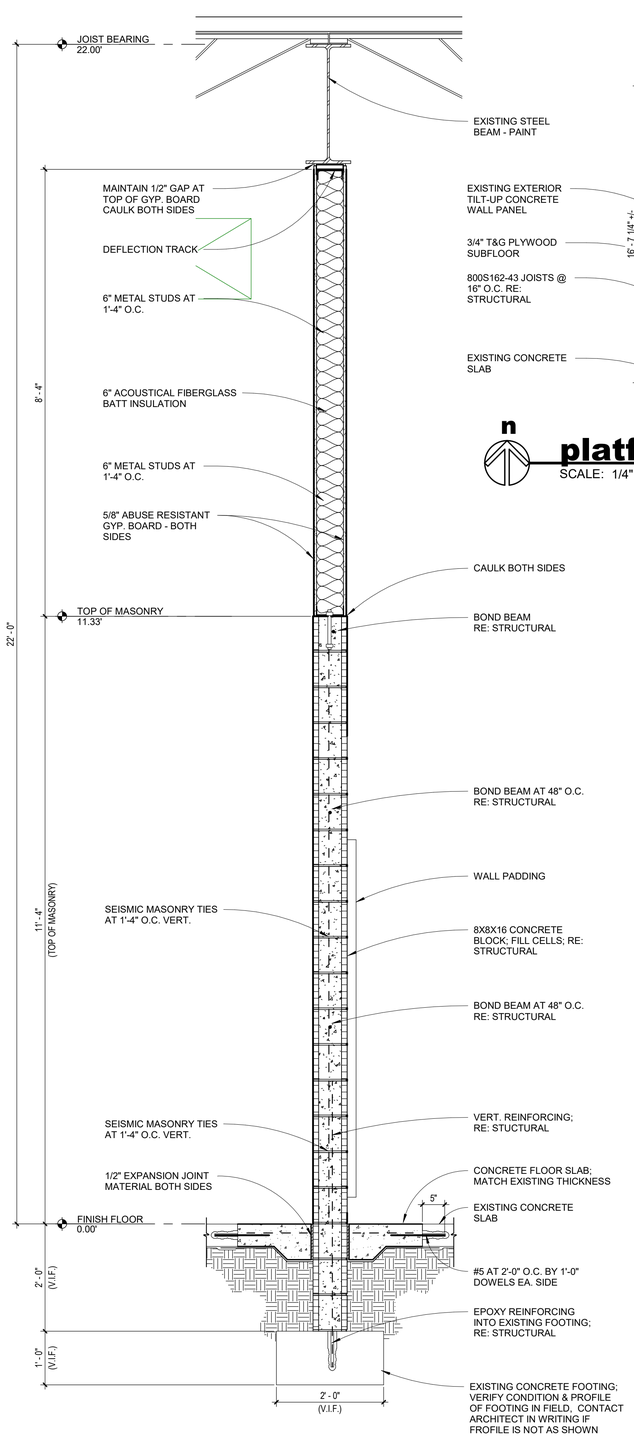

B wall section
SCALE: 3/4" = 1'-0"

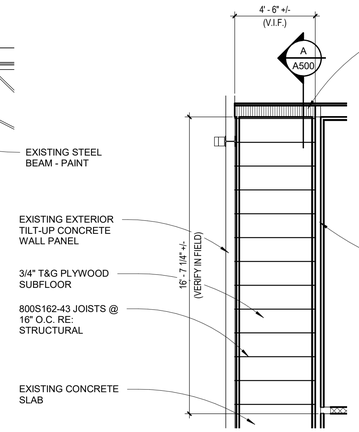

n platform framing plan
SCALE: 1/4" = 1'-0"

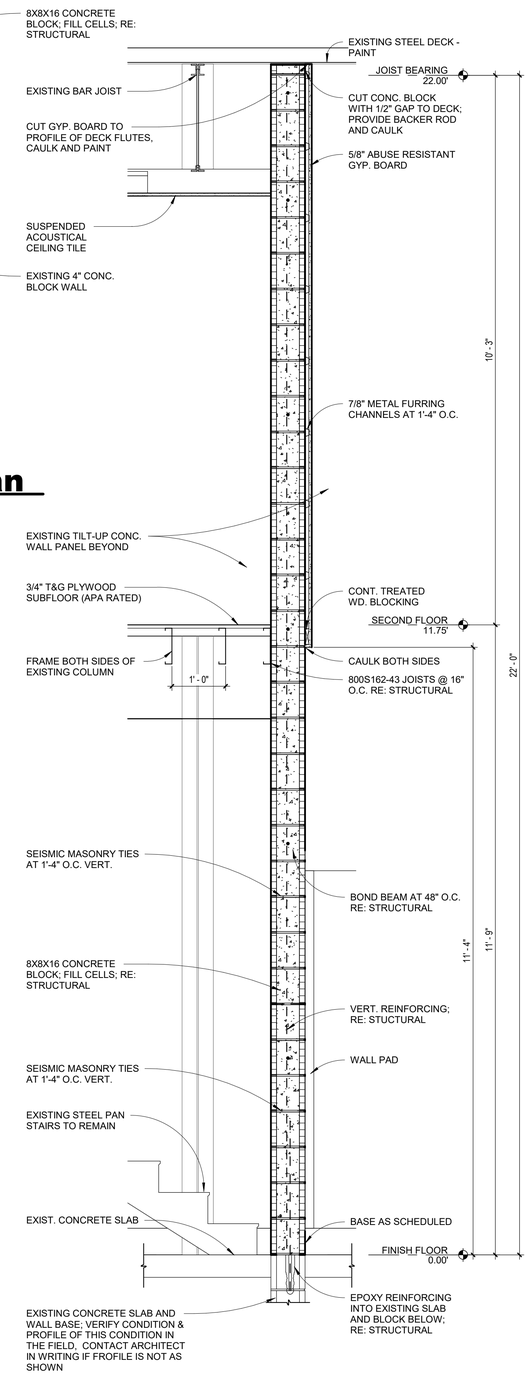

A wall section
SCALE: 3/4" = 1'-0"

Renovations to Jonesboro Recreational Center
Jonesboro Arkansas
Phase II

BRACKETT KRENNERICH architects
100 East Huntington Ave. Suite D P.O. Box 1655
870-932-0571 Fax 870-932-0975
www.bkarchts.com

Revision Schedule			
Tag	Rev. Description	Rev. Date	Issued by

BRACKETT-KRENNERICH & ASSOCIATES, P.A. REGISTERED ARCHITECTS CIS ARKANSAS

20 February 2022

Commission Number 2127

A500

Date: February 20 2022

WALL SECTIONS

A:\2127 - Jonesboro Recreational Center Renovation\5 - PROCUREMENT\BID SET
A500.dwg
3/7/2022 9:26:00 AM

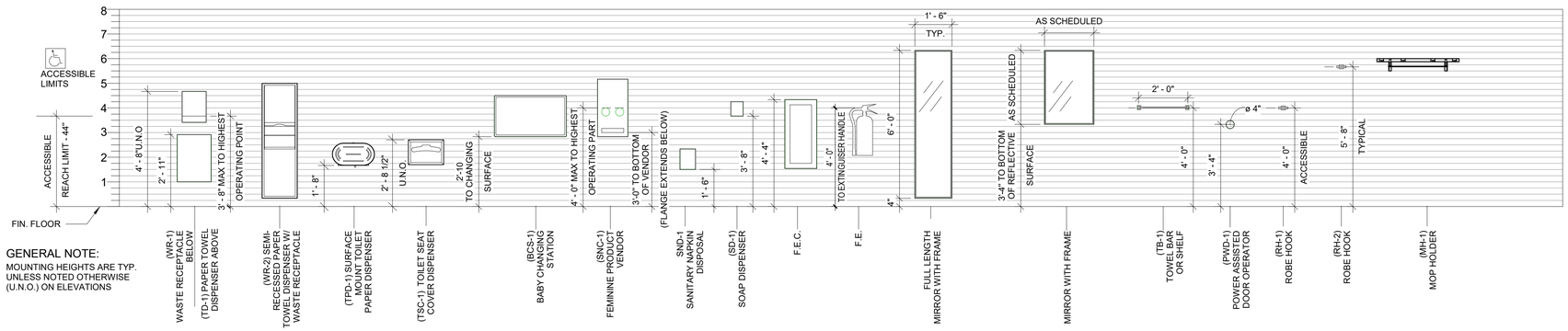

GENERAL NOTE:
MOUNTING HEIGHTS ARE TYP. UNLESS NOTED OTHERWISE (U.N.O.) ON ELEVATIONS

mounting heights

SCALE: 3/8" = 1'-0"

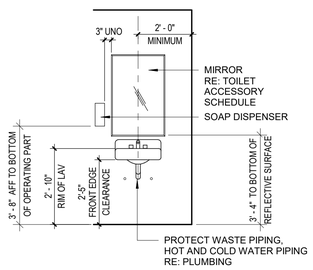

typical lav elev

SCALE: 3/8" = 1'-0"

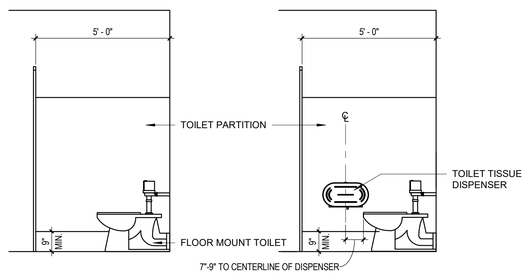

TYP. TOILET STALL SIDE ELEV. "B"(OPPOSITE "A")

TYP. TOILET STALL SIDE ELEV. "A"

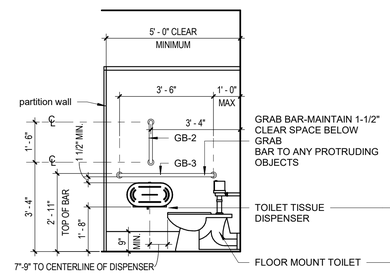

AMBULATORY TOILET STALL SIDE ELEV

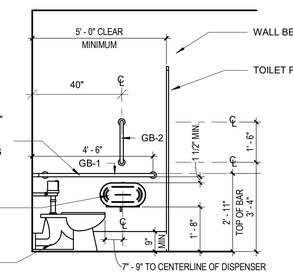

ACCESSIBLE TOILET STALL SIDE ELEVATION
ELEVATION AT ADA STALL ALSO APPLIES TO TOILET ROOMS

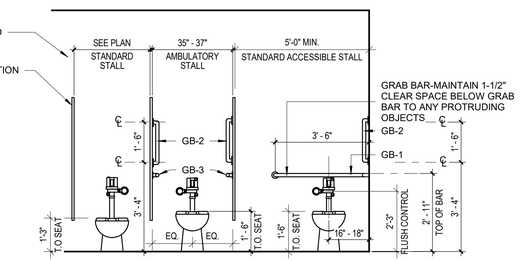

TOILET STALL ELEVATION
ELEVATION AT ADA STALL ALSO APPLIES TO TOILET ROOMS

toilet elevations

SCALE: 3/8" = 1'-0"

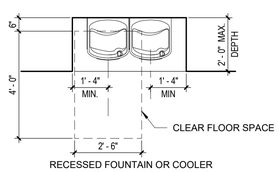

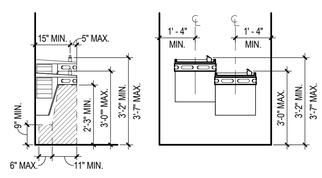

water cooler clearance

SCALE: 3/8" = 1'-0"

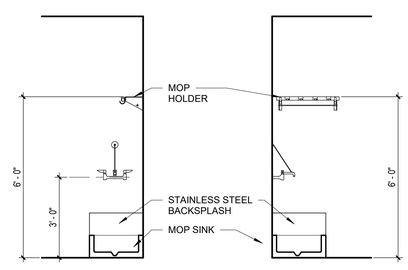

janitor closet

SCALE: 3/8" = 1'-0"

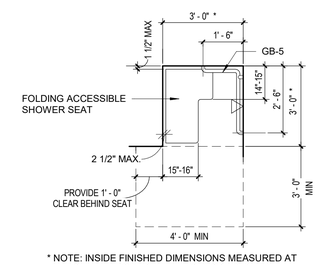

* NOTE: INSIDE FINISHED DIMENSIONS MEASURED AT THE CENTER POINTS OF THE OPPOSING SIDES

TRANSFER SHOWER STALL

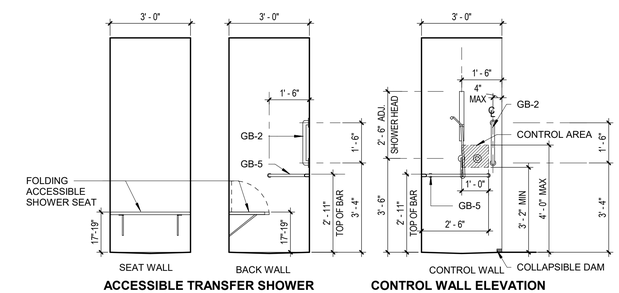

ACCESSIBLE TRANSFER SHOWER STALL ELEVATIONS

CONTROL WALL ELEVATION

typical shower layout

SCALE: 3/8" = 1'-0"

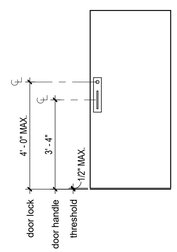

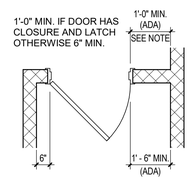

DOOR PLACEMENT DETAIL

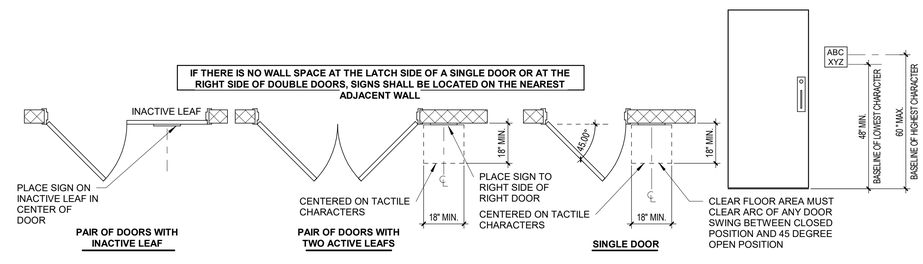

door signage and clearance

SCALE: 3/8" = 1'-0"

A:\2127 - Jonesboro Recreational Center Renovation\5 - PROCUREMENT\BID SET
2127
3/7/2022 9:26:01 AM

Renovations to Jonesboro Recreational Center

Jonesboro Arkansas
Phase II

BRACKETT KRENNERICH architects
100 East Huntington Ave. Suite D P.O. Box 1655
870-932-0571 Fax 870-932-0975 www.bkarchts.com

Revision Schedule			
Tag	Rev. Description	Rev. Date	Issued by

BRACKETT-KRENNERICH & ASSOCIATES, P.A. REGISTERED ARCHITECTS CIS ARKANSAS
20 February 2022

Commission Number 2127

A600

Date: February 20 2022

TOILET MOUNTING HEIGHTS AND DETAILS

GENERAL NOTES:

1. THE INFORMATION PRESENTED ON THIS SHEET IS A **GUIDE** TO MEETING THE REQUIREMENTS OF THE ADA & THE AUTHORITY HAVING JURISDICTION AS THEY APPLY TO THIS PROJECT. THIS INFORMATION IS INTENDED TO BE NO LESS RESTRICTIVE THAN THE REQUIREMENTS PRESENTED IN THE ADA ACCESSIBILITY GUIDLINE (ADAAG). IN SOME CASES WHERE THEY ARE MORE RESTRICTIVE, THE CRITERIA PRESENTED HERE SHALL BE FOLLOWED. SOME OF THE TOILET ACCESSORIES ILLUSTRATED HERE ARE BASED ON PRODUCTS MANUFACTURED BY A SPECIFIC COMPANY BUT THIS IN NO WAY IS MEANT TORESTRICT THE USE OF PRODUCTS OF OTHER MANUFACTURERS AS MAY BE PERMITTED BY THE PROJECT MANUAL & SPECIFICATION. ALL DIMENSIONS MUST BE COORDINATED & REVIEWED WITH OWNER SUPPLIED ACCESSORIES. CONTRACTORS & SUPPLIERS SHALL NOTIFY THE ARCHITECT IF THEY BELIEVE A PRODUCT SPECIFIED OR AN INSTALLATION DETAIL TO BE CONTRARY TO THE MINIMUM REQUIREMENTS OF THE ADAAG AND THE AUTHORITY HAVING JURISDICTIONS CODES.
2. THE SERVICE OR OPERATING POINT FOR ALL INSTALLED TOILET ROOM EQUIPMENT OR ACCESSORIES SHALL BE MOUNTED NOT MORE THAN 44"AFF.
3. NO CONSTRUCTION OR EQUIPMENT SHALL BE INSTALLED WHICH DIMINISHES AN ACCESSIBLE ROUTE TO LESS THAN 36" WIDE BY 80" HIGH.
4. NO OBJECT SHALL BE INSTALLED WHICH PROTRUDES MORE THAN 4" FROM THE WALL IF THE BOTTOM OF THE LEADING EDGE IS BETWEEN 27"& 80" ABOVE THE FINISHED FLOOR.
5. ALL GRAB BARS SHALL HAVE A 1-1/2" CLEAR FINGER SPACE BETWEEN THE WALL & THE GRAB BAR.
6. ALL GRATINGS LOCATED IN WALKING SURFACES SHALL HAVE SPACES NO GREATER THAN 1/2" WIDE IN ONE DIRECTION & WHERE ELONGATED OPENINGS ARE PROVIDED THEY SHALL BE PLACED SO THAT THE LONG DIRECTION IS PERPENDICULAR TO THE DOMINANT DIRECTION OF TRAVEL.
7. NO RAMP SHALL BE CONSTRUCTED WITH A SLOPE GREATER THAN 7.5% IN THE DIRECTION OF TRAVEL AND A CROSS SLOPE GREATER THAN 1.5%.
8. REFER TO SPECIFICATION SECTION 10 2813 TOILET ACCESSORIES FOR MODEL NUMBERS AND TOILET PLANS FOR ACCESSORY LOCATIONS.
9. A FLOOR SLOPE LESS THAN 1:20 IS NOT A RAMP. CROSS SLOPES CANNOT EXCEED 1.5%.
10. CHANGES IN LEVEL BETWEEN 1/4" INCH AND 1/2" SHALL BE BEVELED WITH A SLOPE NO GREATER THAN 1:2.
11. SEE ENLARGED TOILET PLANS AND ELEVATIONS FOR INDIVIDUAL TOILET ROOM ACCESSORY LOCATIONS AND MOUNTING HEIGHTS.

TOILET ACCESSORIES LEGEND
GB-1 __GRAB BAR *(42"x 54" 'L' SHAPED)*
GB-2 __GRAB BAR *(18" LONG)*
GB-3 __GRAB BAR *(42" LONG)*
GB-4 __GRAB BAR *(36" LONG)*
GB-5 __GRAB BAR *(18"x 30" 'L' SHAPED)*
MR-1 __24"W x 36"H MIRROR
MH-1___MOP HANGER
RH-1___ROBE HOOK (48" A.F.F.)
RH-2___ROBE HOOK (68" A.F.F.)
SCR-1__SHOWER CURTAIN AND ROD (36")
SND-1__SANITARY TOWEL DISPENSER
TD-1___TOWEL DISPENSER
SD-1___SOAP DISPENSER
TPD-1__TOILET PAPER DISPENSER
EHD-1__ELECTRIC HAND DRYER
SS-1___FOLD DOWN SHOWER SEAT

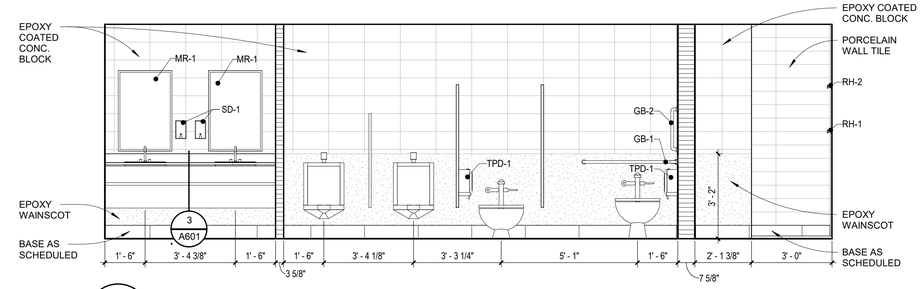

2 A601 men 112/men's shower 112A

3/8" = 1'-0"

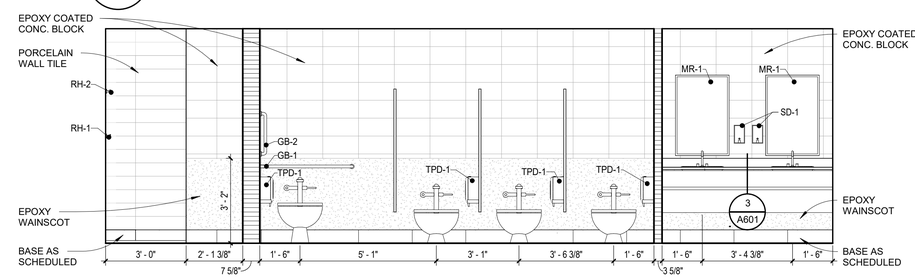

1 A601 women 113/women's shower 113A

3/8" = 1'-0"

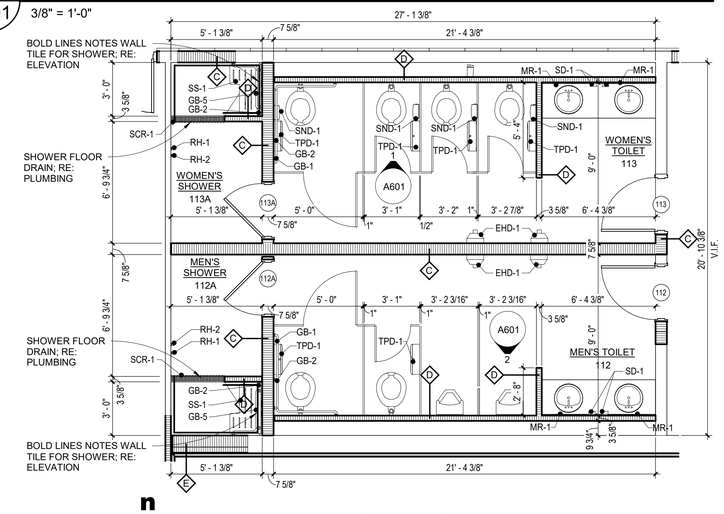

enlarged toilet plan

SCALE: 1/4" = 1'-0"

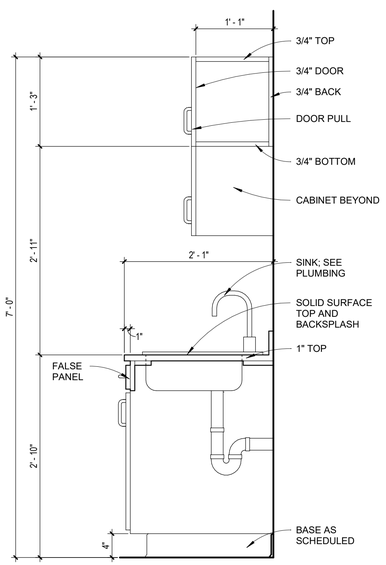

5 cabinet section

SCALE: 1" = 1'-0"

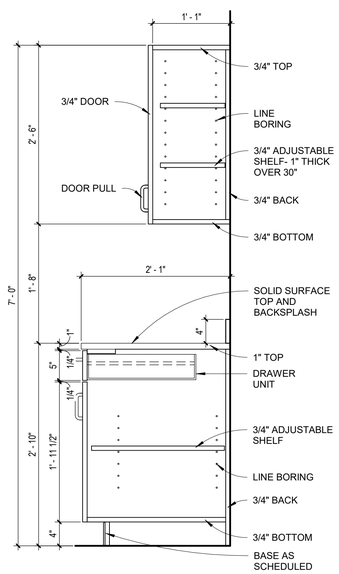

4 cabinet section

SCALE: 1" = 1'-0"

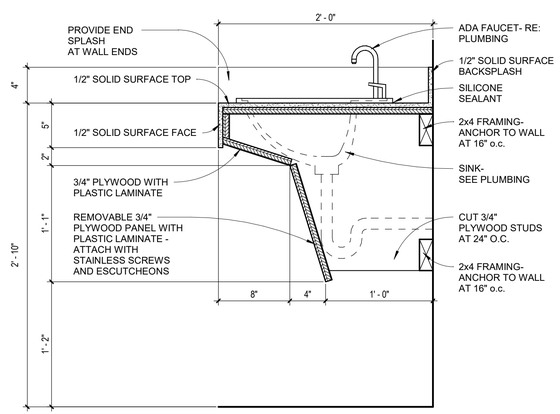

3 ADA Counter Section

SCALE: 1 1/2" = 1'-0"

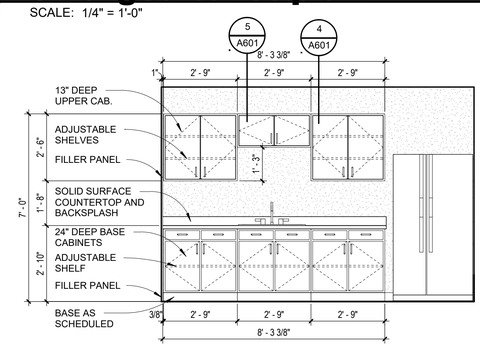

millwork 1

3/8" = 1'-0"

Renovations to
Jonesboro Recreational Center
Jonesboro Arkansas
Phase II

BRACKETT KRENNERICH architects
100 East Huntington Ave. Suite D P.O. Box 1655 870-932-0571 Fax 870-932-0975 www.bkarchts.com

Revision Schedule			
Tag	Rev. Description	Rev. Date	Issued by

BRACKETT-KRENNERICH & ASSOCIATES, P.A. REGISTERED ARCHITECTS C13 ARKANSAS
20 February 2022

Commission Number 2127

A601

Date: February 20 2022

ENLARGED TOILET PLAN, TOILET ELEVATIONS, DETAILS, MILLWORK & MILLWORK SECTIONS

A:\2127 – Jonesboro Recreational Center Renovation\S – PROCUREMENT\BID SET
2127A.dwg
3/7/2022 9:26:01 AM

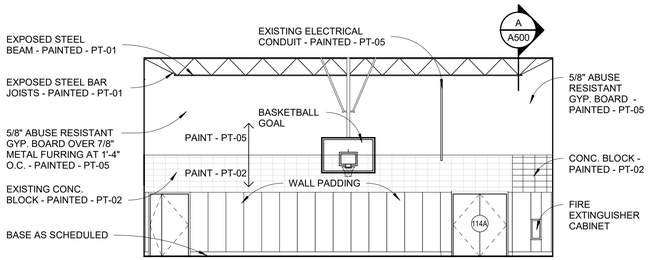

3 A700 **basketball court 115 - interior elevation**
1/8" = 1'-0"

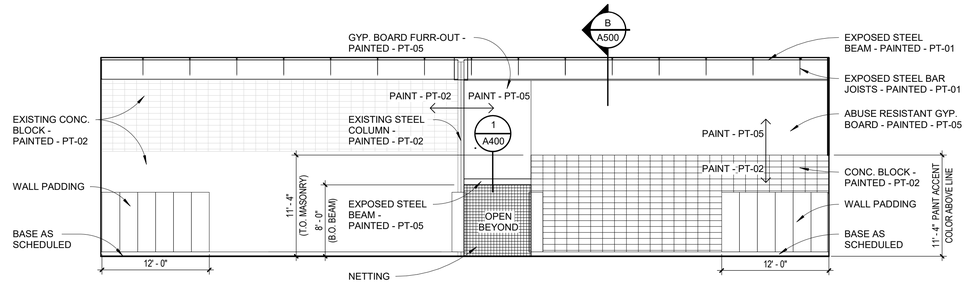

2 A700 **basketball court 115 - interior elevation**
1/8" = 1'-0"

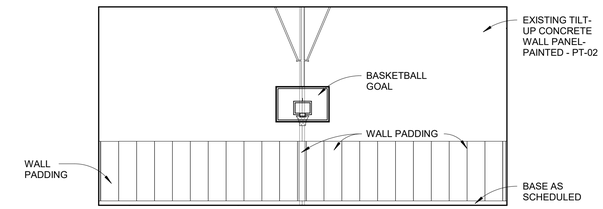

1 A700 **basketball court 115 - interior elevation**
1/8" = 1'-0"

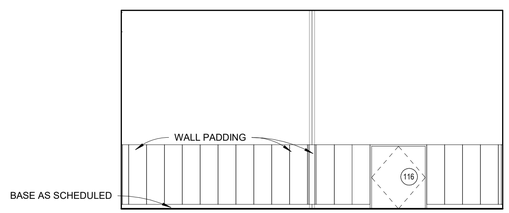

5 A700 **soccer field 116 - interior elevation**
1/8" = 1'-0"

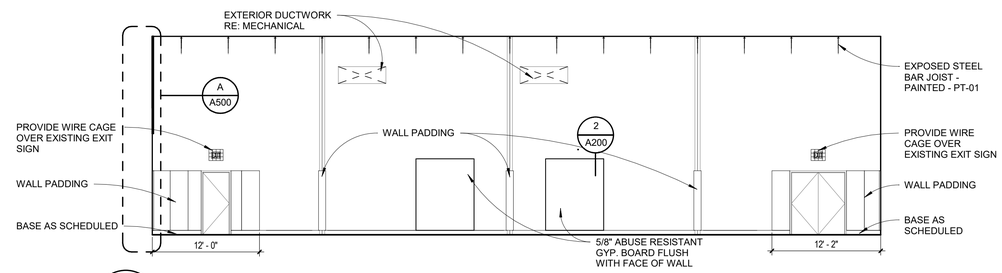

4 A700 **basketball court 115 - interior elevation**
1/8" = 1'-0"

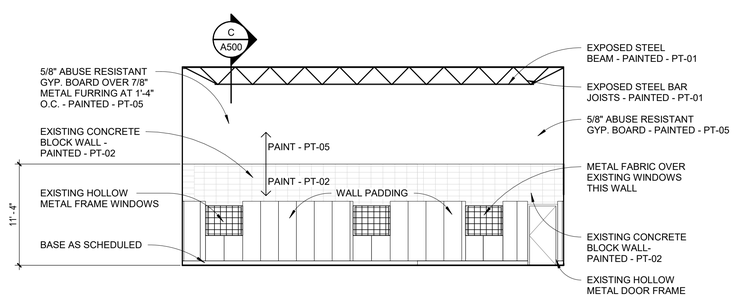

7 A700 **soccer field 116 - interior elevation**
1/8" = 1'-0"

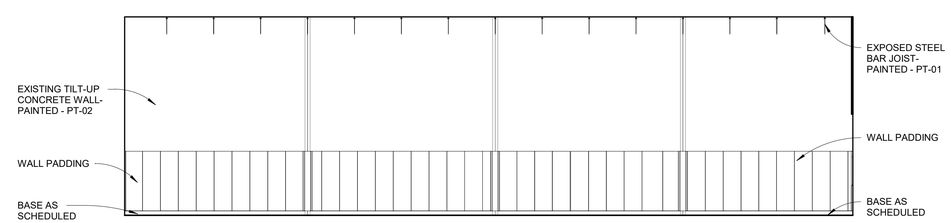

6 A700 **soccer field 116 - interior elevation**
1/8" = 1'-0"

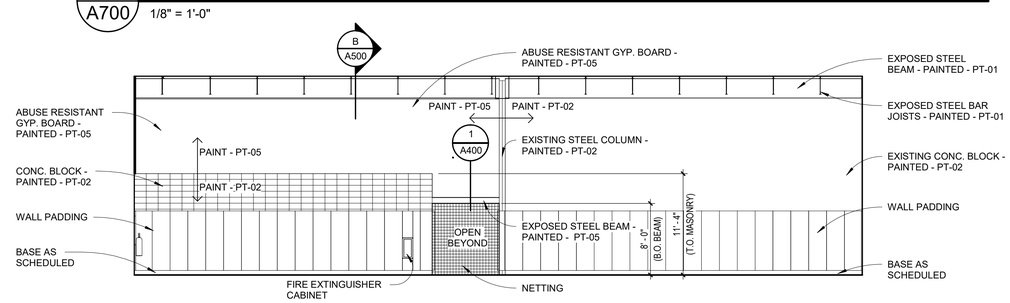

8 A700 **soccer field 116 - interior elevation**
1/8" = 1'-0"

Renovations to Jonesboro Recreational Center
Jonesboro Arkansas
Phase II

BRACKETT KRENNERICH architects
100 East Huntington Ave. Suite D P.O. Box 1655
870-932-0571 Fax 870-932-0975
www.bkarchts.com

Revision Schedule			
Tag	Rev. Description	Rev. Date	Issued by

BRACKETT-KRENNERICH & ASSOCIATES, P.A. REGISTERED ARCHITECTS CIA ARKANSAS
20 February 2022

Commission Number 2127

A700

Date: February 20 2022

INTERIOR ELEVATIONS

A:\2127 - Jonesboro Recreational Center Renovation\5 - PROCUREMENT\BID SET
CONTROL.dwg
3/7/2022 9:26:02 AM

STRUCTURAL STEEL NOTES:

GENERAL:

1. All rolled wide flange shapes shall conform to ASTM A-992, f_y =50 ksi.
2. All hollow structural shapes (HSS) shall conform to ASTM A-500, Grade B, f_y=46 ksi.
3. All plates shall conform to ASTM A-36, f_y =36 ksi.
4. All misc. steel shall conform to ASTM A-36, f_y=36 ksi, unless noted otherwise.
5. All steel details shall be in accordance with the latest AISC Specifications (including AISC Seismic Provisions when applicable).
6. Splicing of structural steel members where not detailed is prohibited without prior approval. If approved, the contractor shall have the connection tested by ultrasound by an independent testing lab.
7. No change in size or position of the structural elements shall be made. Holes, slots, cuts, etc., are not permitted through any member unless they are detailed on the approved shop drawings.

WELDS:

1. All welding shall be performed by certified welders in accordance with AWS specifications.
2. All welding electrodes shall conform to AWS A5.1 Grade E-70.

MASONRY NOTES:

GENERAL:

1. All masonry work shall be in accordance with The Building Code Requirements for Masonry Structures (ACI 530, latest edition).
2. Mortar shall conform to ASTM C 270, Type S. Type N mortar and masonry cement mortar are not allowed.
3. The unit/mortar combination shall provide a minimum compressive strength (f'_m) of 1,500 psi.
4. Concrete masonry walls shall have control joints at the following locations:
   a.) At all abrupt changes in wall height.
   b.) At all changes in wall thickness.
   c.) Centered over joints in foundations and floors.
   d.) Centered below joints in roofs and floors that bear on CMU walls.
   e.) At a distance not over one-half the required joint spacing from bonded wall intersections, corners, or changes in wall direction.
   f.) At the end of lintels and sills on one side of wall openings six feet or less in width and at both sides of lintels and sills where wall openings are more than six feet wide, unless bond beams or equivalent joint reinforcement is placed at the top and bottom of the opening.

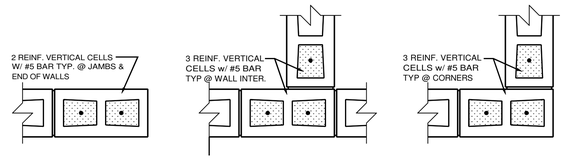

1 TYPICAL 8" MASONRY WALLS

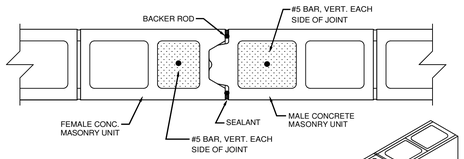

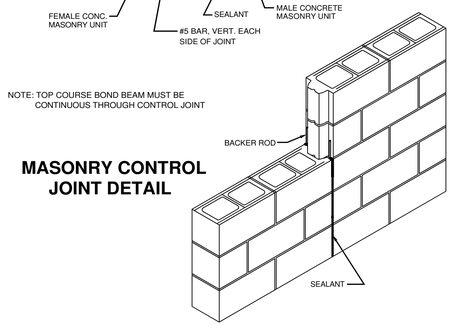

2 MASONRY CONTROL JOINT DETAIL

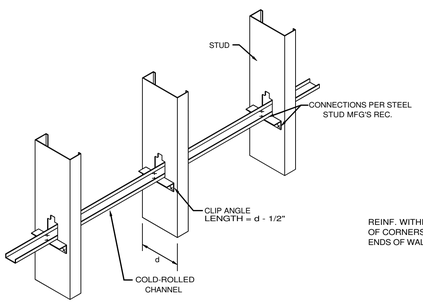

3 TYPICAL WALL BRIDGING/BLOCKING FRAMING DETAIL

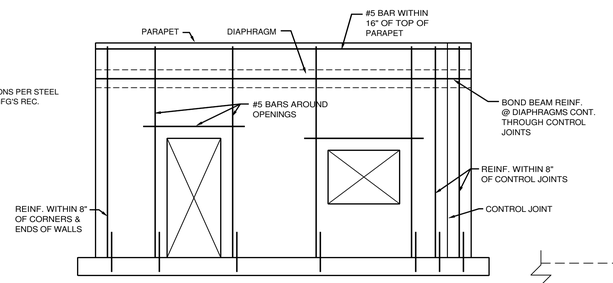

4 CMU REINFORCEMENT REQUIRED LOCATIONS

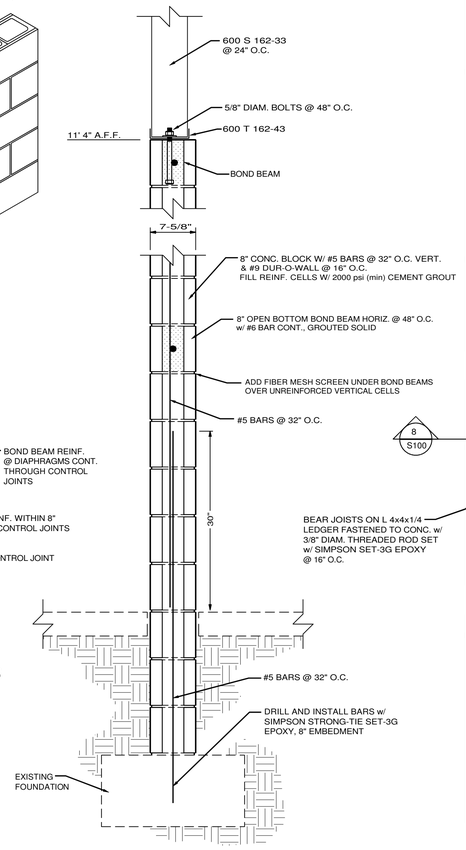

5 CMU WALL SECTION
SCALE 1"=1'

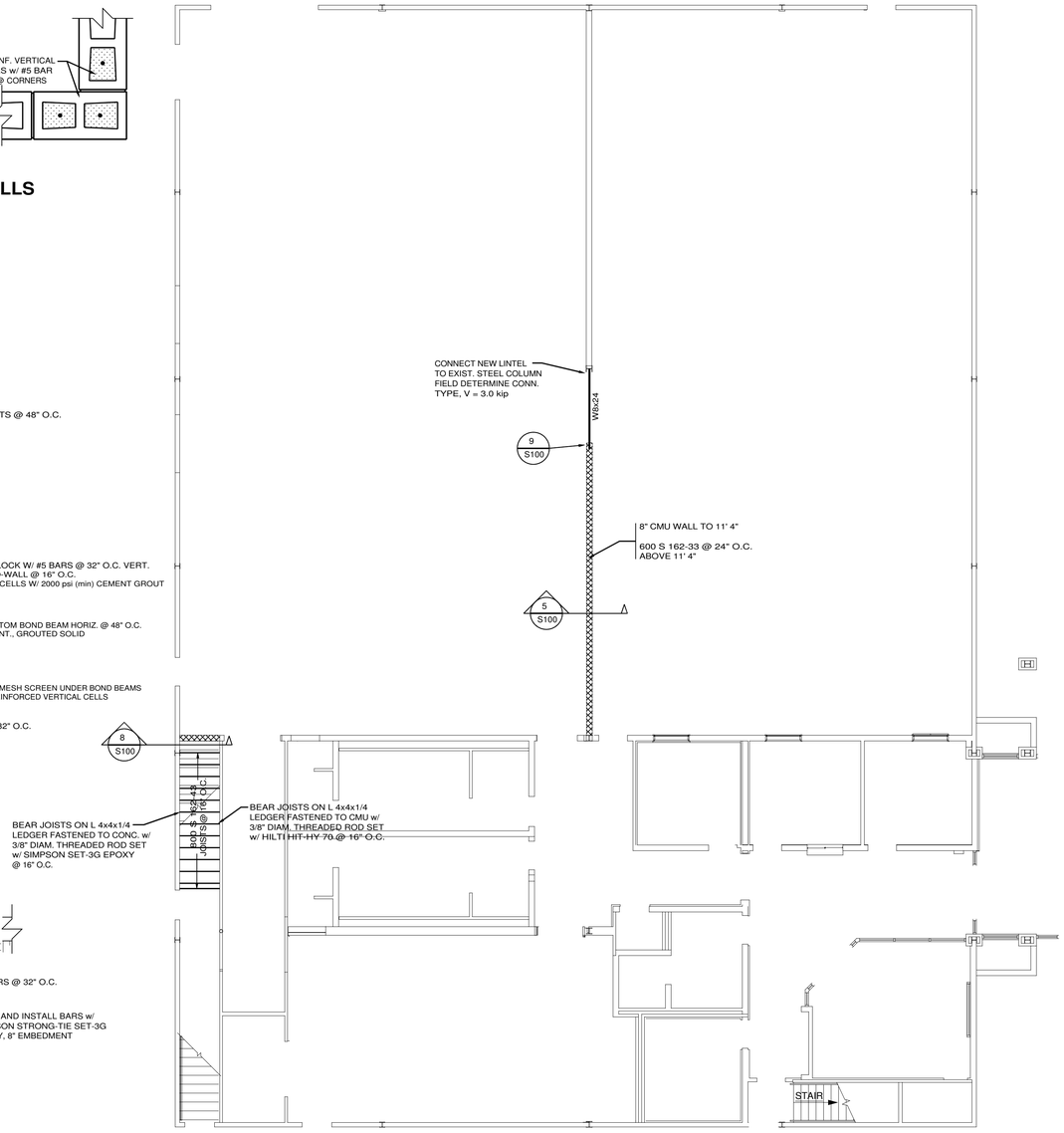

FRAMING MODIFICATIONS PLAN
SCALE 1/8"=1'

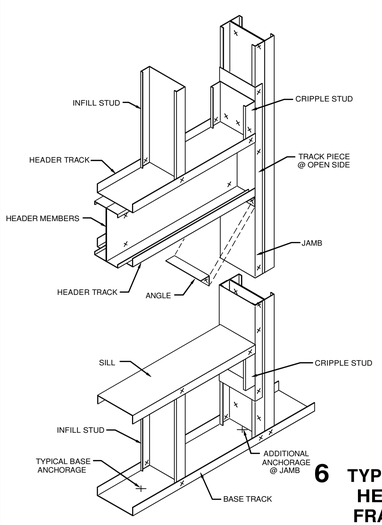

6 TYPICAL WINDOW HEADER/JAMB FRAMING DETAIL

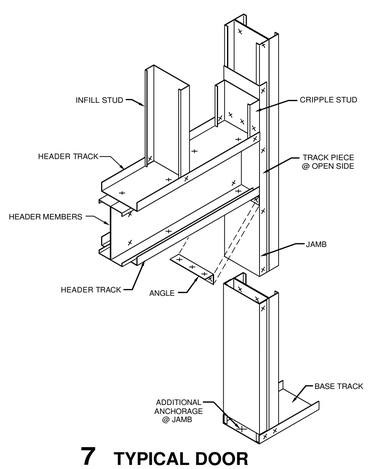

7 TYPICAL DOOR HEADER/JAMB FRAMING DETAIL

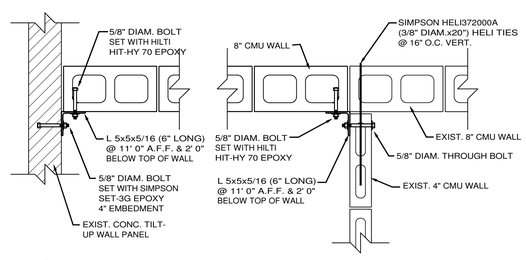

8 CMU WALL SECTION & CONNECTION DETAIL
SCALE 1"=1'

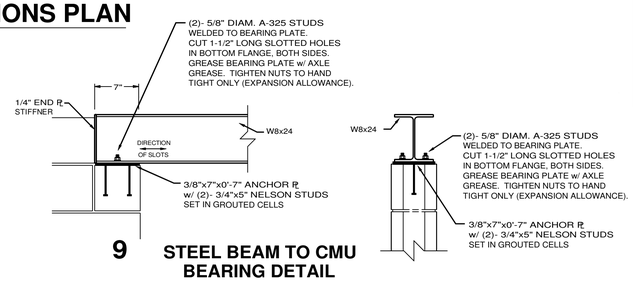

9 STEEL BEAM TO CMU BEARING DETAIL
SCALE 1"=1'

SMITH ENGINEERING CO.
CIVIL & STRUCTURAL
P.O.BOX 299 * MARION, AR 72364 * (870) 739-5533

Renovations to
Jonesboro Recreational Center
Jonesboro, Arkansas
Phase II

BRACKETT KRENNERICH architects
100 East Huntington Ave Suite D P.O. Box 1655
870-932-0571 Fax: 870-932-0975
www.bkarchts.com

Revision Schedule			
Tag	Rev. Description	Rev. Date	Issued by

STATE OF ARKANSAS
REGISTERED PROFESSIONAL ENGINEER
No. 12043
MICHAEL D. SMITH
2/25/22

Commission Number
2127

S100

Date February 25, 2022

FRAMING MODIFICATION PLAN & DETAILS

GENERAL MECHANICAL NOTES

1 REFER TO SPECIFICATIONS AND PROJECT MANUAL FOR ADDITIONAL INFORMATION AND REQUIREMENTS.
2 REFER TO ALL PROJECT DRAWINGS FOR DETAILS OF CONSTRUCTION AND INSTALLATION REQUIREMENTS.
3 REFER TO GENERAL CONDITIONS AND SUPPLEMENTARY GENERAL CONDITIONS FOR THE CONTRACT. THE GENERAL CONTRACTOR IS RESPONSIBLE FOR FULL COORDINATION OF PROJECT INCLUDING THE EQUIPMENT AND INSTALLATION OF THE MECHANICAL WORK.
4 CONTRACTOR SHALL BECOME, PRIOR TO BID, THOROUGHLY FAMILIAR WITH THE REQUIREMENTS OF THESE NOTES AS WELL AS OTHER REQUIREMENTS SHOWN ON THE CONTRACT DOCUMENTS.
5 ALL DRAWINGS ARE DIAGRAMMATIC AND INDICATE THE GENERAL ARRANGEMENTS OR GEOMETRICAL RELATIONSHIPS OF EQUIPMENT AND SERVICES. THEY ARE NOT INTENDED TO SPECIFY OR SHOW EVERY OFFSET, SEQUENCE, DEVICE, OPTION, FITTING, OR COMPONENT.
6 INFORMATION AND COMPONENTS SHOWN ON RISER DIAGRAMS OR DETAILS, BUT NOT SHOWN ON PLANS, AND VICE VERSA, SHALL BE PROVIDED AS IF EXPRESSLY REQUIRED BY BOTH.
7 CONTRACTOR SHALL NOT SCALE DRAWINGS. DRAWINGS SPECIFIC TO THIS DISCIPLINE DO NOT LIMIT THE RESPONSIBILITY OF WORK REQUIRED BY THE CONTRACT DOCUMENTS.
8 UNLESS NOTED OTHERWISE, THE INDICATION AND/OR DESCRIPTION OF ANY ITEM, IN THE DRAWINGS OR SPECIFICATIONS CARRIES WITH IT THE INSTRUCTION TO FURNISH AND INSTALL THE ITEM.
9 EXACT LOCATIONS OF ALL EQUIPMENT, THERMOSTATS, SWITCHES, VAV BOXES, DUCTS, DIFFUSERS, ETC. SHALL BE COORDINATED WITH OTHER TRADES. CEILING MOUNTED SPRINKLER, LIGHTING, AND ELECTRICAL REQUIREMENTS TAKE PRECEDENCE OVER CEILING MOUNTED MECHANICAL REQUIREMENTS. SEE ARCHITECTURAL REFLECTED CEILING PLANS FOR CEILING GRID AND LIGHTING LAYOUT FOR COORDINATION OF FINAL DIFFUSER LOCATIONS. ALL SPRINKLER HEADS MUST BE CENTERED IN CEILING GRID PANELS AND MUST PROVIDE FOR A SYMMETRICAL LAYOUT. SEE FIRE PROTECTION NOTES.
10 SEE ARCHITECTURAL AND STRUCTURAL DRAWINGS FOR BUILDING DETAILS AND DIMENSIONS. COORDINATE PLACEMENT OF ALL THERMOSTATS, ROOF MOUNTED EQUIPMENT, ETC. WITH ARCHITECTURAL AND STRUCTURAL TRADES.
11 CONTRACTOR SHALL BE RESPONSIBLE FOR COORDINATING ALL WORK WITH THAT OF OTHER TRADES. REFER TO ARCHITECTURAL, STRUCTURAL, ELECTRICAL, AND OTHER DRAWINGS FOR COMPLETE INFORMATION PRIOR TO BID.
12 ROUGH-IN OR INSTALLATION OF OWNER FURNISHED EQUIPMENT SHALL NOT BEGIN UNTIL APPROVED EQUIPMENT DRAWINGS ARE OBTAINED FROM OWNER OR ARCHITECT. DO NOT SUBMIT SHOP DRAWINGS FOR ANY EQUIPMENT WHICH MUST BE COORDINATED WITH OWNER FURNISHED ITEMS UNTIL THE APPROVED DRAWINGS ARE OBTAINED FROM OWNER OR ARCHITECT. VERIFY THE APPROVED EQUIPMENT HAS THE SAME ROUGH-IN AND FINAL CONNECTION REQUIREMENTS AND DESIGN CRITERIA AS THE DOCUMENTS. NOTIFY ENGINEER OF ANY CHANGES, INCOMPATIBILITY, OR UNUSUAL CONDITIONS IMMEDIATELY. SEE SPECIFICATIONS OR DRAWINGS FOR LIST OF OWNER FURNISHED EQUIPMENT (WHERE APPLICABLE)
13 ALL MECHANICAL CONSTRUCTION DETAILS SHALL BE AS SHOWN AND AS REQUIRED TO MAINTAIN "UL" ASSEMBLY RATINGS AS SHOWN ON ARCHITECTURAL SHEETS. SEAL AROUND ALL PENETRATIONS THOROUGH UL RATED ASSEMBLIES, FIRE AND SMOKE WALLS. COORDINATE WITH GENERAL CONTRACTOR.
14 NO OTHER TRADES, I.E., ELECTRICAL, CEILING, PLUMBING, ETC., SHALL BE SUSPENDED, HUNG, OR SUPPORTED FROM DUCTWORK OR PIPING.
15 REPLACE ALL ARCHITECTURAL FEATURES REMOVED OR DAMAGED DURING THE COURSE OF THE WORK.
16 ALL WORK MUST COMPLY WITH THE REQUIREMENTS OF LOCAL CODES AND ORDINANCES. WHERE INSPECTIONS ARE REQUIRED BY AUTHORITIES HAVING JURISDICTION, WORK MUST NOT BE CONCEALED UNTIL INSPECTIONS AND TESTING ARE COMPLETED AND ACCEPTED.
17 HOUSEKEEPING PADS: EXCEPT WHERE STRUCTURAL EQUIPMENT SUPPORT PADS ARE CALLED FOR ON THE PLANS, PROVIDE CONCRETE HOUSEKEEPING PADS FOR ALL GROUND AND/OR FLOOR MOUNTED EQUIPMENT. UNLESS OTHERWISE INDICATED, PADS MUST BE MINIMUM OF 4 INCHES THICK WITH CHAMFERED EDGES. WHERE PADS ARE INSTALLED ON CONCRETE FLOORS, DOWEL RODS PENETRATING INTO BOTH THE PAD AND THE FLOOR (MINIMUM 4 RODS PER PAD) MUST BE USED TO ANCHOR PADS IN POSITION
18 ALL WIRING INSTALLED FOR CONTROLS, POWER, INTERLOCKS, ETC. WHICH ARE TO BE INSTALLED IN OCCUPIED SPACES OR IN RETURN AIR PLENUMS MUST BE PLENUM RATED OR INSTALLED IN CONDUIT UNLESS OTHERWISE INDICATED. ALL SUCH INSTALLATIONS MUST MEET NFPA AND NEC REQUIREMENTS AND LOCAL CODES.
19 SEAL ALL ROOF AND WALL PENETRATIONS. FLASH AND COUNTER-FLASH ALL ROOF PENETRATIONS. MINIMUM ACCEPTABLE HEIGHT OF FLASHING IS EIGHT (8) INCHES ABOVE ROOF.
20 MAINTAIN A MINIMUM OF 15'-0" BETWEEN ALL FRESH AIR INTAKES AND PLUMBING VENTS EXHAUST FAN DISCHARGE, FLUES, ETC. COORDINATE WITH ALL OTHER CONTRACTORS ON SITE.
21 COORDINATE FINAL PLACEMENT OF ALL THERMOSTATS WITH WALL MOUNTED DEVICES AND OWNER'S REPRESENTATIVE. MOUNT THERMOSTATS AT 48" A.F.F. ANY THERMOSTAT THAT IS REQUIRED TO BE MOUNTED ON AN EXTERIOR WALL MUST BE MOUNTED ON AN INSULATED BASE.
22 MECHANICAL CONTRACTOR SHALL SUPPLY SMOKE DETECTOR IN RETURN DUCT OF AIR HANDLERS OVER 2000 CFM AND FOR UNITS WHICH SERVE AREAS OF EGRESS FOR INSTALLATION BY ELECTRICAL CONTRACTOR. DETECTORS SHALL BE DUCT MOUNTED, PHOTOELECTRIC TYPE COMPATIBLE WITH EXISTING FIRE ALARM SYSTEM WITH INTEGRAL RELAY FOR SHUTDOWN OF UNIT UPON ACTIVATION OF DETECTOR
23 EXTERIOR DUCTWORK EXPOSED TO WEATHER: CROWN TOP SURFACE FOR WATER RUNOFF AND COMPLETELY SEAL ALL JOINTS WITH UV RESISTANT WEATHERPROOF SEALANT.
24 DURING CONSTRUCTION, AFTER START-UP OF HVAC SYSTEMS, CONTRACTOR MUST MAINTAIN AND/OR REPLACE ON A REGULAR SCHEDULE ALL FILTERS IN THE HVAC SYSTEM. ONE (1) WEEK BEFORE THE FACILITY IS OCCUPIED, THE CONTRACTOR MUST REPLACE ALL AIR FILTERS WITH NEW FILTERS. DO NOT OPERATE HVAC SYSTEMS WITHOUT FILTER

GENERAL HVAC NOTES

1 PROVIDE ACCESS DOORS TO ALL FIRE DAMPERS, SMOKE DAMPERS, EQUIPMENT, COILS, ETC. WHERE NOT DIRECTLY ACCESSIBLE THOROUGH AIR DEVICES OR REMOVABLE CEILING GRID. MINIMUM SIZE SHALL BE 18" X 10" UNLESS NOTED OTHERWISE.
2 INSTALL FIRE OR SMOKE DAMPERS IN THE RATED WALLS AS INDICATED. SEAL AROUND ALL PENETRATIONS OF RATED WALLS, CHASES, CEILINGS, FLOORS, ETC. TO MAINTAIN THE FIRE/SMOKE RATING OF THE ASSEMBLY.
3 ALL EQUIPMENT AND MATERIAL SHALL BE SUITABLE FOR ELEVATED TEMPERATURES INDICATED.
4 SEE STRUCTURAL PLANS FOR EXACT DIMENSIONS AND DETAILS OF THE BUILDING.
5 ALL HVAC WORK TO BE PER SMACNA AND ALL APPLICABLE CODES.
6 ALL DUCTS SHALL BE MOUNTED HIGH AS POSSIBLE AGAINST BOTTOM OF BEAMS EXCEPT AS REQUIRED TO AVOID CONFLICTS WITH INTERSECTING DUCTS. DIAGONALLY OFFSET DUCTS IMMEDIATELY BEFORE AND AFTER PASSING UNDER INTERSECTING DUCTS OR LARGE STRUCTURAL MEMBERS TO MAINTAIN DUCT TIGHT TO STRUCTURE.
7 PROVIDE TURNING VANES AT ALL ELBOWS GREATER THAN 45°. TURNING VANES SHALL BE SINGLE THICKNESS.
8 EXPOSED DUCTWORK, ETC. SHALL BE FURNISHED FREE OF VISUAL DEFECTS, SUITABLE FOR PAINTING AND SHALL BE PAINTED AS REQUIRED BY ARCHITECTURAL SPECIFICATIONS.
9 ANY DUCTWORK WHICH PASSES OVER RETURN AIR OPENING THROUGH WHICH DUCT IS VISIBLE, SHALL BE PAINTED FLAT BLACK A MINIMUM OF 5 FEET EACH SIDE OF OPENING TO REDUCE VISIBILITY.
10 MAXIMUM 5'-0" FLEX DUCT ON ALL DIFFUSER RUNOUTS. FLEX DUCT SHALL BE USED FOR STRAIGHT, VERTICAL RUNS (ABOVE CEILING ONLY); ELBOWS SHALL NOT BE CONSTRUCTED OF FLEX DUCT.
11 PROVIDE AIR TIGHT FITTING AND DAMPER AT EACH CONNECTION OF ROUND BRANCH DUCTS TO A RECTANGULAR DUCT.
12 PROVIDE FLEXIBLE CONNECTIONS AND TRANSITIONS ON DUCT INLET AND OUTLET CONNECTIONS TO ALL VAV BOXES, ETC. WHERE EQUIPMENT HAS ROTATING PARTS (MOTORS, ETC.).
13 SEE ARCH REFLECTED CEILING PLAN FOR EXACT LOCATION OF ALL CEILING MOUNTED AIR DEVICES.
14 ALL DUCTWORK SHALL BE EXTERNALLY INSULATED WITH 2" THICK FOIL BACKED FIBERGLASS INSULATION UNLESS SHOWN OTHERWISE. SEE SPECIFICATIONS FOR DETAILED INSULATION REQUIREMENTS.
15 DUCT SIZES SHOWN ON PLANS INDICATE NET FREE AREA.
16 INSTALL SCHEDULED FILTERS AT THE COMPLETION OF CONSTRUCTION. USE ONE SET OF SCHEDULED FILTERS DURING CONSTRUCTION, AND INSTALL FINAL SET PRIOR TO TEST AND BALANCE.
17 BALANCE AIR SYSTEM TO PROVIDE INDICATED AIR FLOWS. SEE SPECIFICATIONS FOR OTHER TEST AND BALANCE REQUIREMENTS. SUBMIT FINAL BALANCE OF AIR AND WATER SYSTEMS (FLOW AND TEMPERATURE) FOR REVIEW.
18 THE CONTRACTOR SHALL COORDINATE AND VERIFY THE FOLLOWING WITH DIVISIONS 15 AND 16 PRIOR TO BID:
DISCONNECTS:
WHERE NOT FURNISHED WITH EQUIPMENT: FURNISHED UNDER DIVISION 16, INSTALLED UNDER DIVISION 16. WHERE FURNISHED WITH EQUIPMENT: FURNISHED UNDER DIVISION 15, INSTALLED UNDER DIVISION 16.

TWO LINE PIPE SYMBOLS

	ELBOW - FLANGED LONG RADIUS 45°
	ELBOW - FLANGED LONG RADIUS 90°
	ELBOW - WELDED LONG RADIUS 45°
	ELBOW - WELDED LONG RADIUS 90°
	END CAP
	FLANGES - SLIP ON
	FLANGES - WELD NECK
	REDUCERS - FLANGED CONCENTRIC
	REDUCERS - FLANGED ECCENTRIC
	REDUCERS - WELDED CONCENTRIC
	REDUCERS - WELDED ECCENTRIC
	TEE - FLANGED
	TEE - WELDED

DEMOLITION AND RENOVATION SYMBOLS

	EQUIPMENT TO BE REMOVED
	EXISTING EQUIPMENT
	NEW EQUIPMENT
	POINT OF CONNECTION TO EXISTING
	TERMINATION OF DEMOLITION
	DUCT TO BE REMOVED
	EXISTING DUCT TO REMAIN
	NEW DUCT
	PIPING TO BE REMOVED
	EXISTING PIPING TO REMAIN
	NEW PIPING

DUCTWORK SYMBOLS

T	THERMOSTAT
	THERMOSTAT WIRING
H	HUMIDISTAT
TS	TEMPERATURE SENSOR
SA	SUPPLY AIR DUCT
RA	RETURN AIR DUCT
EA	EXHAUST AIR DUCT
CFM	CUBIC FEET PER MINUTE
EMS	ENERGY MANAGEMENT SYSTEM
ATC	AUTOMATIC TEMP CONTROLS
CO2	CARBON DIOXIDE
PPM	PARTS PER MILLION
Ø	ROUND DIAMETER
	FLAT OVAL (MAJOR/MINOR)
	SHORT (1x) RADIUS ELL (RECTANGULAR OR ROUND) CENTERLINE RADIUS = 1d
	LONG (1.5x) RADIUS ELL (ROUND OR OVAL) CENTERLINE RADIUS = 1.5d
	SQUARE ELL
	ELL WITH TURNING VANES
	STREAMLINE TAP (RECTANGULAR)
Ø	STREAMLINE TAP (ROUND)
Ø	CONICAL TAP
	STRAIGHT TAP
	LATERAL TAP
	MANUAL VOLUME DAMPER
M	MOTORIZED VOLUME DAMPER
FD	FIRE DAMPER (FD)
S	SMOKE DAMPER
S FD/S	COMBINATION FIRE / SMOKE DAMPER (FD/S)
20/12	RECTANGULAR DUCT (WIDTH/DEPTH)
	ROUND DUCT OFFSET
RISE	CHANGE IN ELEVATION (RISE, FALL)
	FLEXIBLE DUCT
	SUPPLY DUCT UP
	RETURN DUCT UP
	EXHAUST DUCT UP
	SUPPLY DUCT DOWN
	RETURN DUCT DOWN
	EXHAUST DUCT DOWN
	CEILING DIFFUSER
	RETURN AIR GRILLE
	EXHAUST AIR GRILLE
AP	ACCESS PANEL
AP	ACCESS PANEL IN ROUND OR OVAL DUCT
X X	TYPE - CFM } AIR DEVICE

Renovations to
Jonesboro Recreational Center
Jonesboro Arkansas
Phase II

BRACKETT KRENNERICH architects
100 East Huntington Ave. Suite D P.O. Box 1655
870-932-0571 Fax 870-932-0975
www.bkarchts.com

Revision Schedule			
Tag	Rev. Description	Rev. Date	Issued by

CERTIFICATE OF AUTHORIZATION GARVER LLC No. 766 ARKANSAS ENGINEERING

STATE OF ARKANSAS LICENSED PROFESSIONAL ENGINEER No. 19630 3/25/22 N. C. BRACK

Commission Number 2127

M001

Date: February 25 2022

GENERAL NOTES AND LEGENDS

C:\Users\bcesick\Documents\Jonesboro Rec Center R20_bcesickTPZNZ.rvt
3/2/2022 9:59:44 AM

KEYED NOTES:

1. REMOVE EXISTING DUCTWORK UP TO ROOF PENETRATION. CAP AND SEAL EXISTING DUCTWORK BELOW ROOF AT POINT OF DEMOLITION.

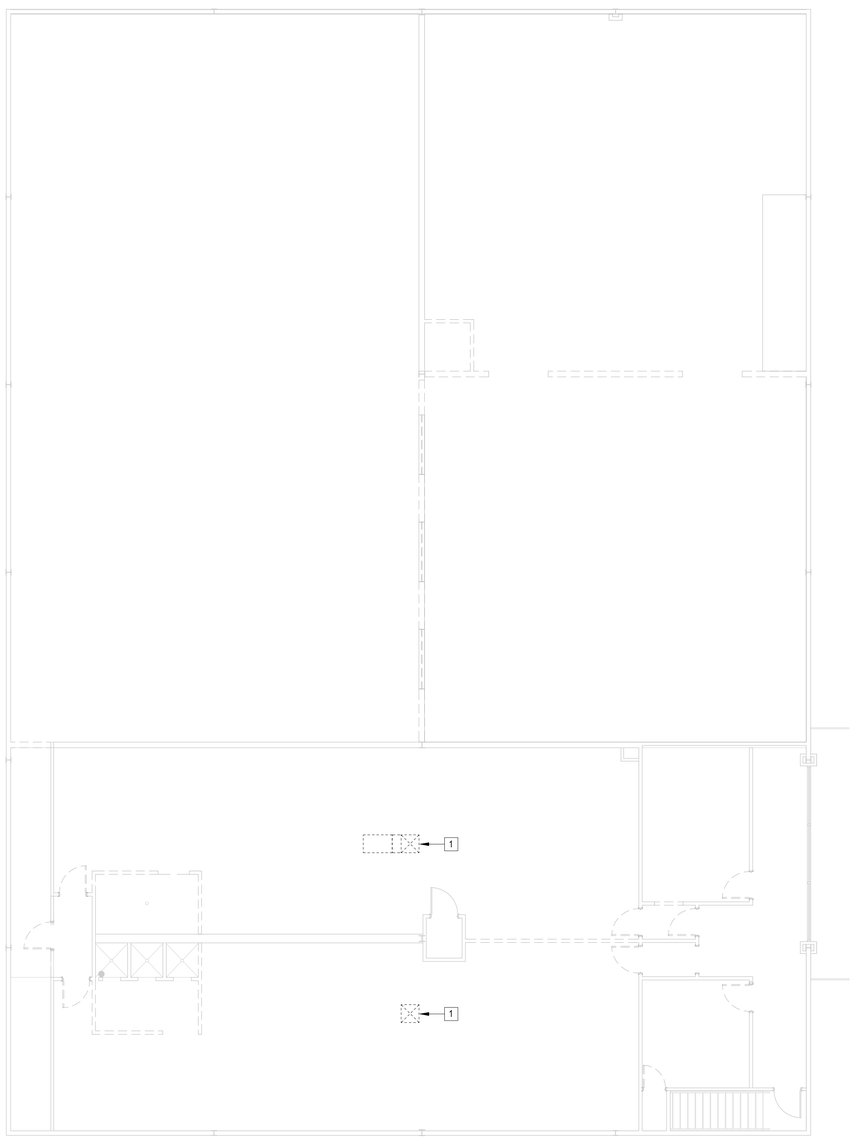

SECOND FLOOR HVAC PLAN - DEMO

SCALE: 1/8" = 1'-0"

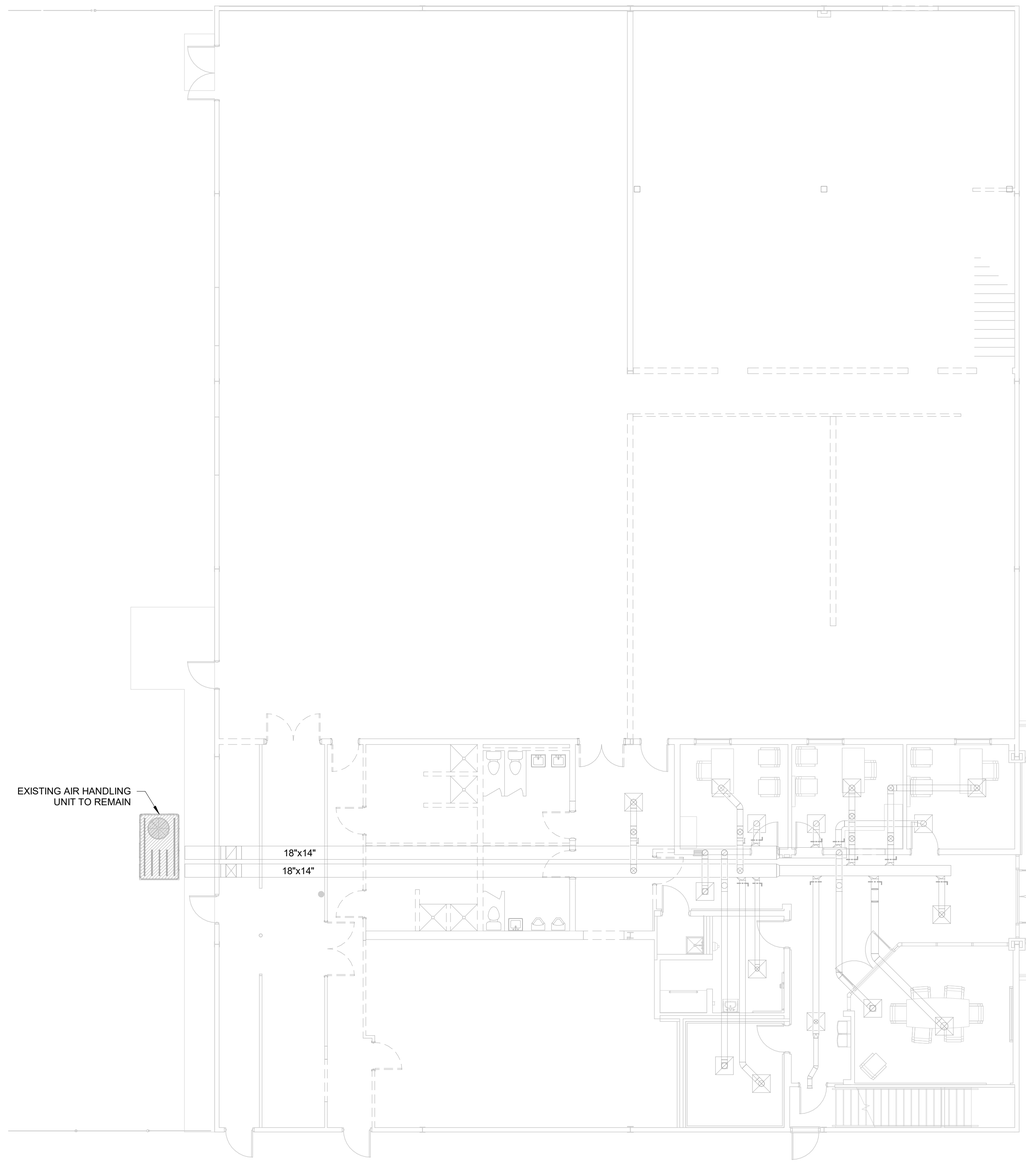

FIRST FLOOR HVAC PLAN - DEMO

SCALE: 1/8" = 1'-0"

CERTIFICATE OF AUTHORIZATION GARVER LLC No. 766 ARKANSAS ENGINEERING

STATE OF ARKANSAS LICENSED PROFESSIONAL ENGINEER No. 19630 ARKANSAS

Commission Number 2127

M101

Date: February 25 2022

Renovations to
Jonesboro Recreational Center
Jonesboro Arkansas
Phase II

BRACKETT KRENNERICH architects
100 East Huntington Ave. Suite D P.O. Box 1655
870-932-0571 Fax 870-932-0975
www.bkarchts.com

Revision Schedule			
Typ	Rev. Description	Rev. Date	Issued by

HVAC PLAN -DEMO

C:\Users\bceslick\Documents\Jonesboro Rec Center R20_bceslickTPZNZ.rvt
3/2/2022 9:59:46 AM

GENERAL NOTES:

1. INSTALL ALL EXTERIOR DUCTWORK WITH 2" INSULATION AND EXTERNAL ALUMINUM JACKET. CROWN TOP OF DUCT FOR RAIN RUN-OFF.
2. INSTALL WALL-MOUNTED THERMOSTATS IN GYMNASIUM AREAS WITH LOCKABLE CLEAR PLASTIC COVER.

KEYED NOTES:

1. INSTALL PACKAGED AIR CONDITIONING UNIT ON NEW CONCRETE EQUIPMENT PAD AS INDICATED.
2. ROUTE DUCTWORK UP EXTERIOR WALL TO LEVEL ABOVE.
3. ROUTE DUCTWORK UP EXTERIOR WALL TO ABOVE CEILING OF FIRST FLOOR LEVEL. SEAL AROUND DUCT PENETRATION THRU EXTERIOR WALL. REFER TO DETAIL.
4. INSTALL DUCT SMOKE DETECTOR AT LOCATION INDICATED. SMOKE DETECTOR IS SUPPLIED BY AIR HANDLING UNIT MANUFACTURER, INSTALLED BY ATC CONTRACTOR. DUCT SMOKE DETECTORS SHALL BE INTERLOCKED WITH BUILDING FIRE ALARM SYSTEM.
5. ROUTE DUCTWORK UP EXTERIOR FROM GROUND-MOUNTED PACKAGED UNITS BELOW.
6. ROUTE 6" DRYER EXHAUST DUCT TO OUTSIDE. INSTALL WALL CAP EQUAL TO BROAN 4C849 AT TERMINATION THRU EXTERIOR WALL.
7. INSTALL HEAT PUMP OUTDOOR UNIT ON ROOF. REFER TO DETAIL FOR ROOFTOP EQUIPMENT INSTALLATION.

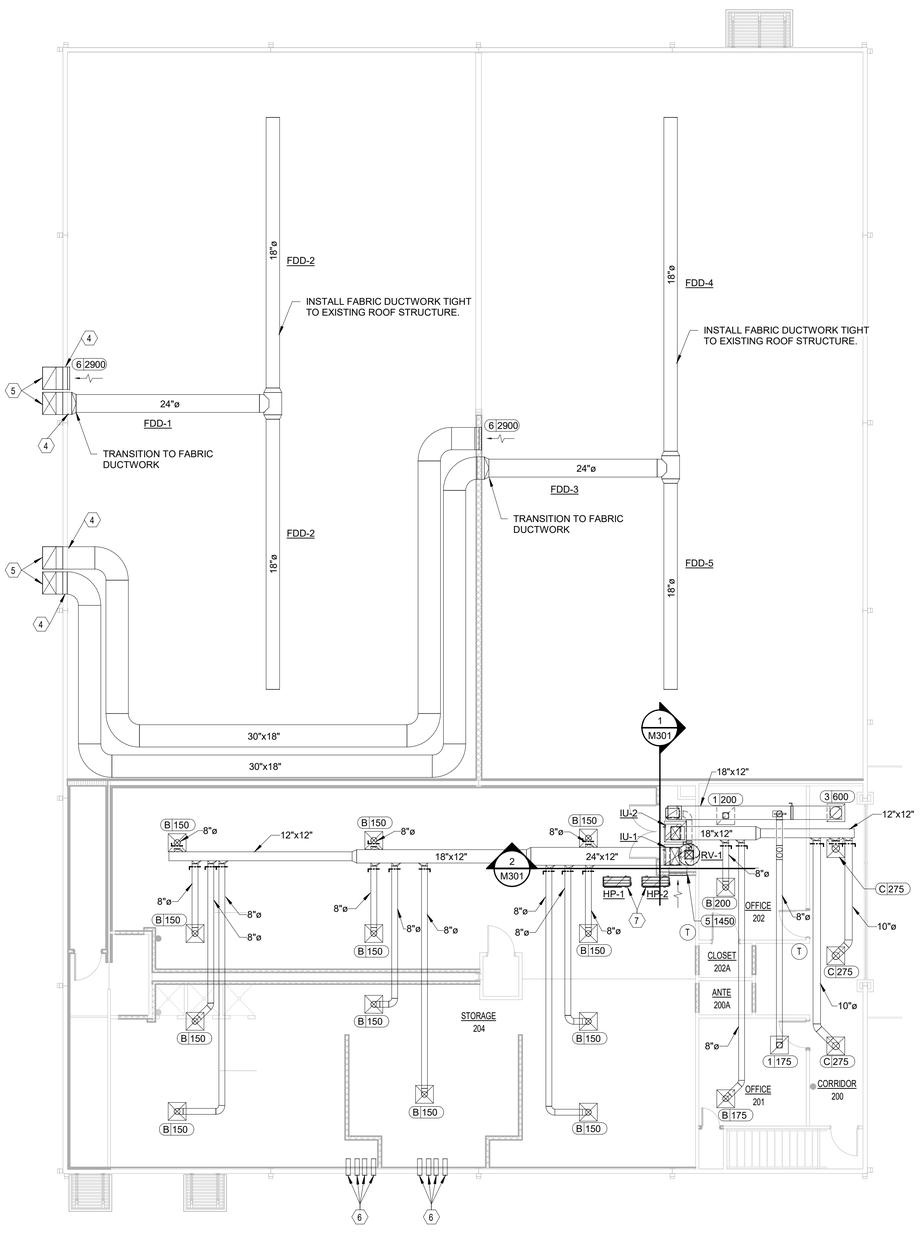

SECOND FLOOR HVAC PLAN - NEW

SCALE: 1/8" = 1'-0"

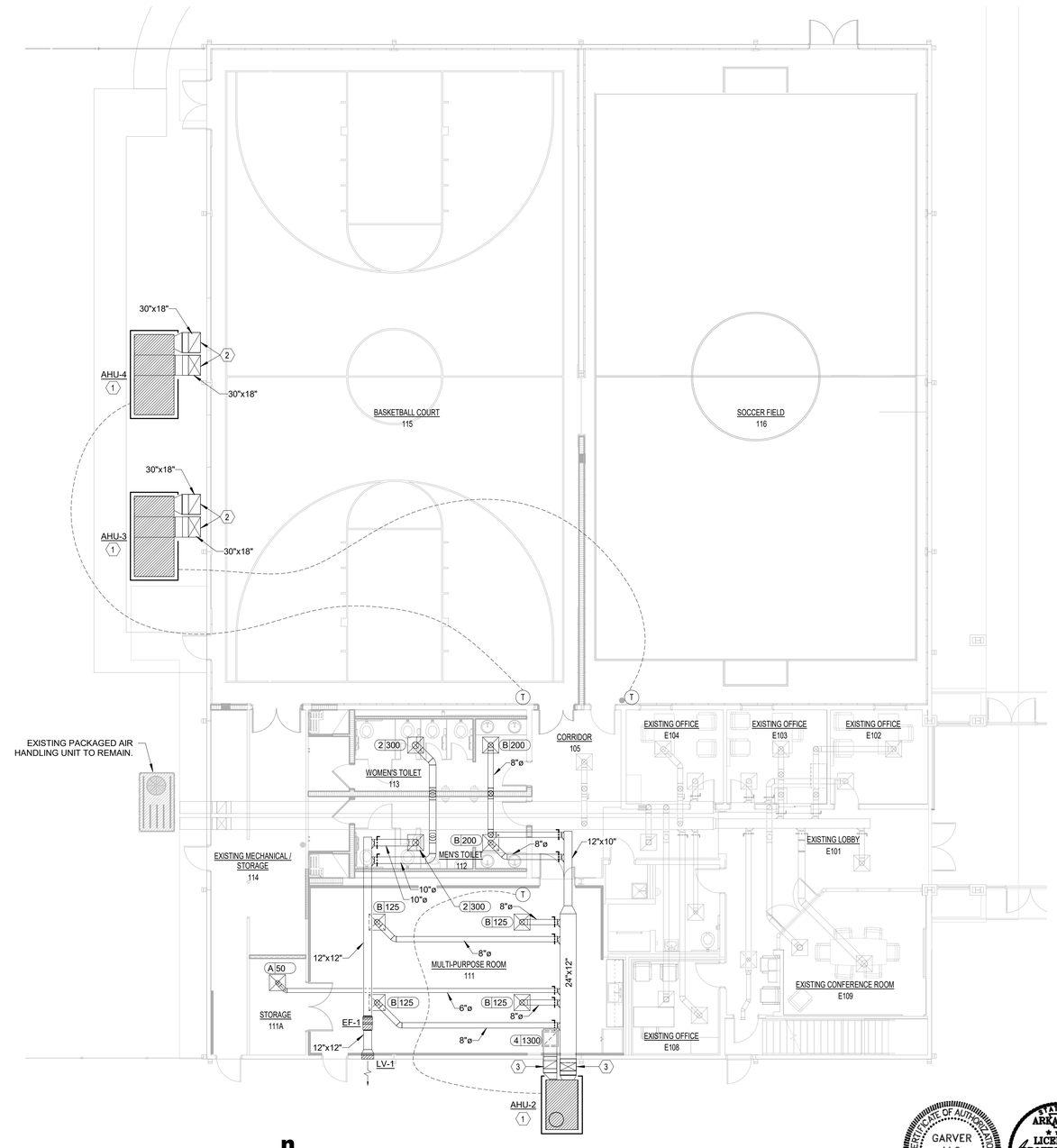

FIRST FLOOR HVAC PLAN - NEW

SCALE: 1/8" = 1'-0"

CERTIFICATE OF AUTHORIZATION GARVER LLC No. 766 ARKANSAS ENGINEERING

STATE OF ARKANSAS LICENSED PROFESSIONAL ENGINEER No. 13630 BRIAN C. BOSLEY

Renovations to Jonesboro Recreational Center

Jonesboro Arkansas Phase II

BRACKETT KRENNERICH architects

100 East Huntington Ave. Suite D P.O. Box 1655 870-932-0571 Fax 870-932-0975 www.bkarchts.com

Revision Schedule				
Tag	Rev. Description	Rev. Date	Issued by	

Commission Number 2127

M201

Date: February 25 2022

HVAC PLAN -NEW

C:\Users\bceslick\Documents\Jonesboro Rec Center R20_bceslickTPZNZ.rvt

3/2/2022 9:59:48 AM

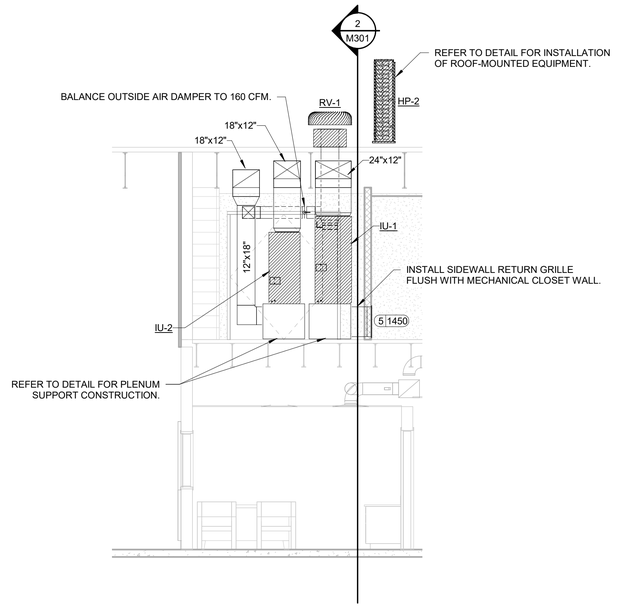

1 SECOND FLOOR MECHANICAL CLOSET SECTION - EAST
SCALE: 1/4" = 1'-0"

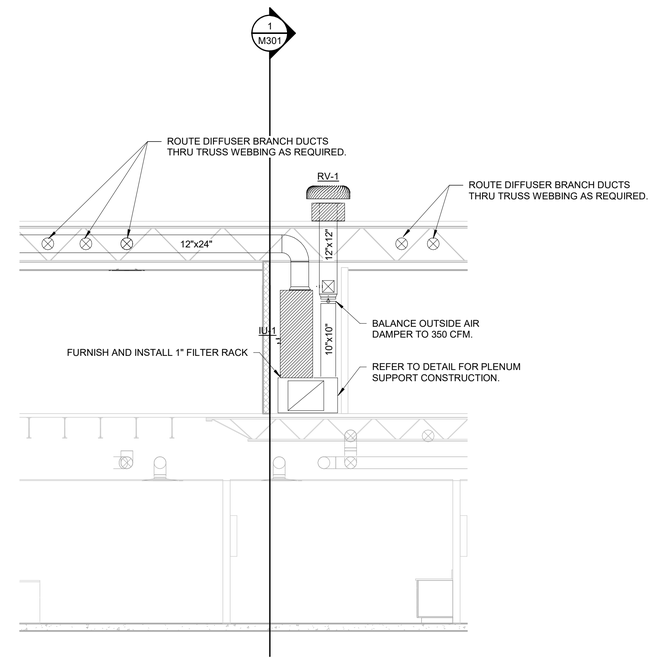

2 SECOND FLOOR MECHANICAL CLOSET SECTION - NORTH
SCALE: 1/4" = 1'-0"

C:\Users\bceslick\Documents\Jonesboro Rec Center R20_bceslickTPZNZ.rvt
3/2/2022 9:59:50 AM

Renovations to
Jonesboro Recreational Center
Jonesboro Arkansas
Phase II

BRACKETT KRENNERICH architects
100 East Huntington Ave. Suite D P.O. Box 1655 870-932-0571 Fax 870-932-0975 www.bkarchts.com

Revision Schedule			
Tag	Rev. Description	Rev. Date	Issued by

CERTIFICATE OF AUTHORIZATION GARVER LLC No. 766 ARKANSAS ENGINEERING

STATE OF ARKANSAS LICENSED PROFESSIONAL ENGINEER No. 13630 BRIAN C. ESTES

Commission Number 2127

M301

Date: February 25 2022

HVAC SECTIONS

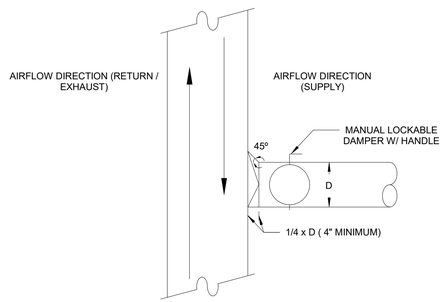

1 ROUND BRANCH DUCT CONNECTION
SCALE: NOT TO SCALE:

NOTE:

FLEXIBLE DUCT CONNECTIONS SHALL BE INSTALLED TO ADC STANDARDS AND SEALED TO UL STANDARDS PER AMC 603 AND 604.2.1. AS A MINIMUM, THE CONTRACTOR SHALL SECURE THE FLEXIBLE DUCT TO ENDS OF METAL DUCT WITH DRAWBANDS, AND WRAP 3" WIDE ALUMINUM TAPE EQUAL TO HARDCAST "FOIL GRIP" AROUND DRAWBAND AND EXPOSED END OF FLEXIBLE DUCT INSULATION.

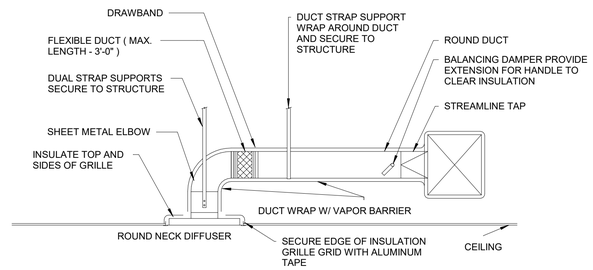

2 DIFFUSER CONNECTION TO ROUND DUCT
SCALE: NOT TO SCALE:

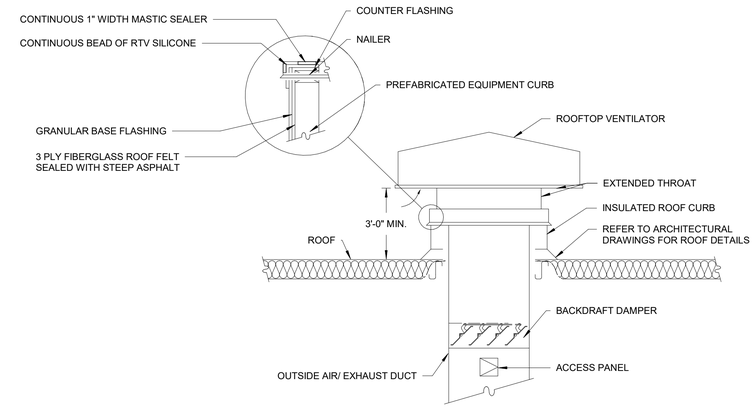

3 ROOFTOP VENTILATOR DETAIL
SCALE: NOT TO SCALE:

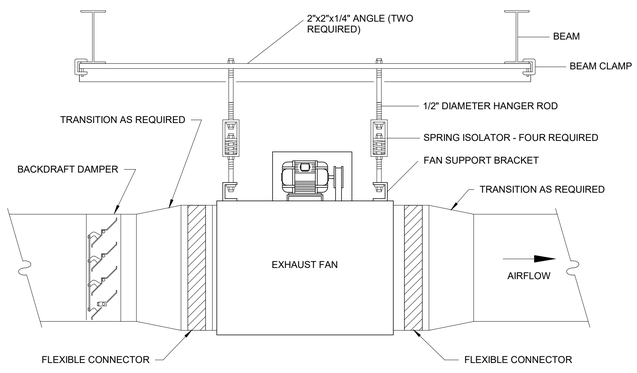

4 INLINE EXHAUST FAN DETAIL
SCALE: NOT TO SCALE

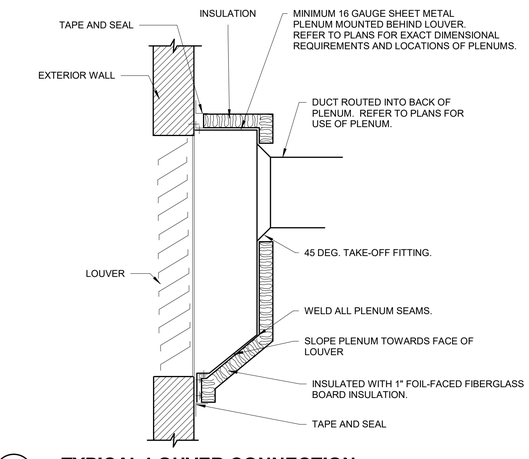

5 TYPICAL LOUVER CONNECTION
SCALE: NOT TO SCALE:

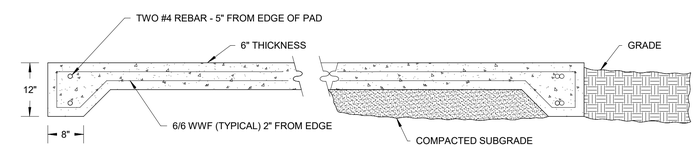

6 HVAC EQUIPMENT PAD DETAIL
SCALE: NOT TO SCALE:

NOTES:

1. REFER TO PLANS FOR QUANTITY AND LENGTH OF EQUIPMENT SUPPORTS.
2. SUPPORTS MUST RUN PARALLEL TO ROOF SLOPE TO AVOID WATER PONDING ON THE ROOF.

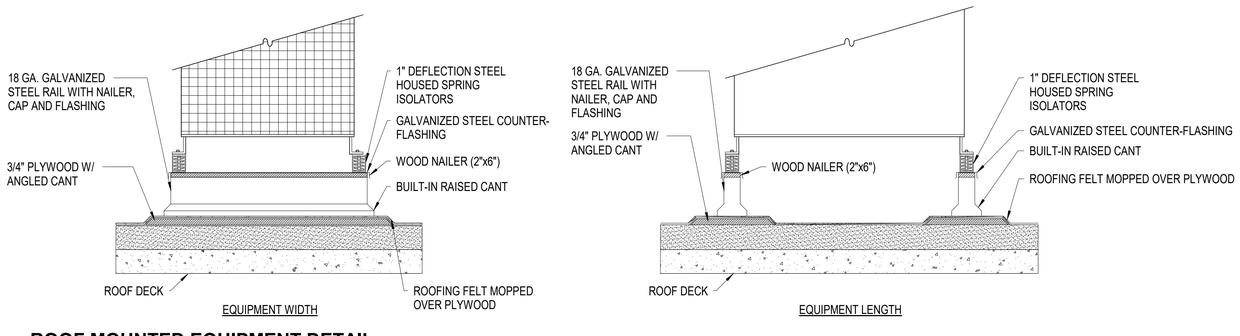

7 ROOF MOUNTED EQUIPMENT DETAIL
SCALE: NOT TO SCALE:

Renovations to Jonesboro Recreational Center
Jonesboro Arkansas Phase II

BRACKETT KRENNERICH architects
100 East Huntington Ave. Suite D P.O. Box 1655
870-932-0571 Fax 870-932-0975
www.bkarchts.com

Revision Schedule			
Tag	Rev. Description	Rev. Date	Issued by

CERTIFICATE OF AUTHORIZATION ARKANSAS ENGINEERING GARVER LLC No. 766

STATE OF ARKANSAS LICENSED PROFESSIONAL ENGINEER No. 19630 BRIAN C. KNIGHT

Commission Number 2127

M501

Date: February 25 2022

HVAC DETAILS

C:\Users\becslick\Documents\Jonesboro Rec Center R20_becslickTPZNZ.rvt
3/2/2022 9:59:52 AM

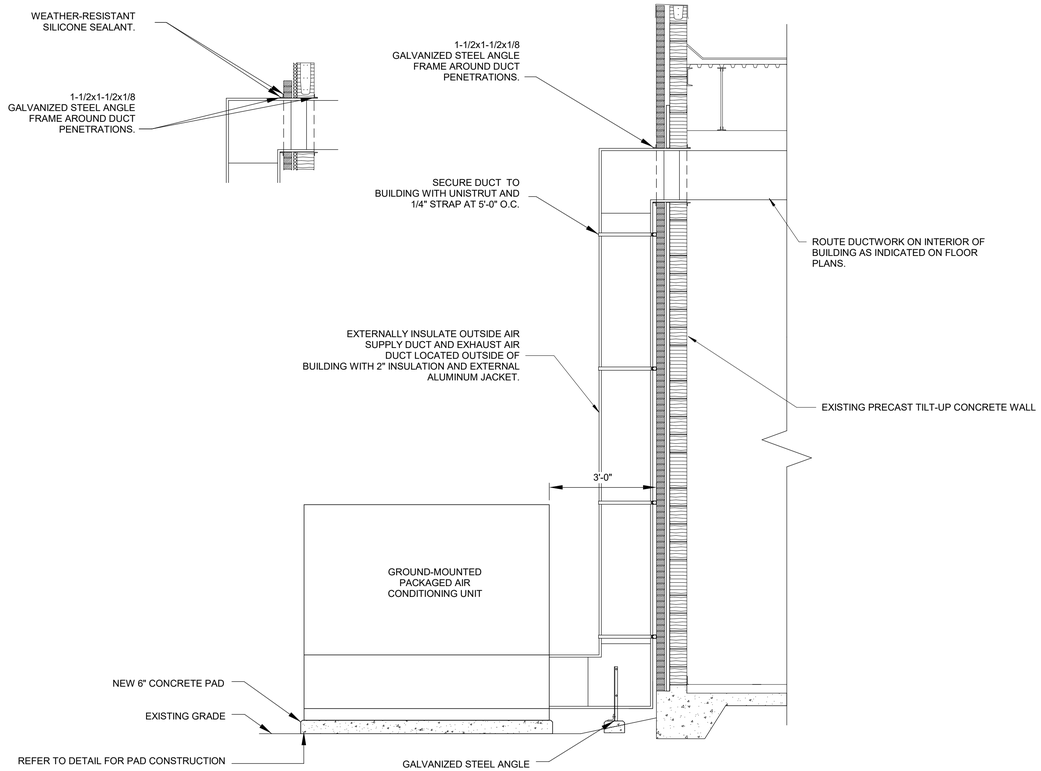

1 PENETRATION AT EXTERIOR WALL DETAIL

SCALE: NOT TO SCALE:

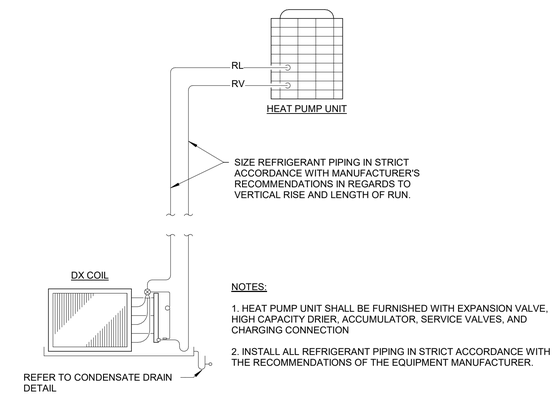

NOTES:

1. HEAT PUMP UNIT SHALL BE FURNISHED WITH EXPANSION VALVE, HIGH CAPACITY DRIER, ACCUMULATOR, SERVICE VALVES, AND CHARGING CONNECTION
2. INSTALL ALL REFRIGERANT PIPING IN STRICT ACCORDANCE WITH THE RECOMMENDATIONS OF THE EQUIPMENT MANUFACTURER.

2 HEAT PUMP REFRIGERANT PIPING DETAIL

SCALE: NOT TO SCALE:

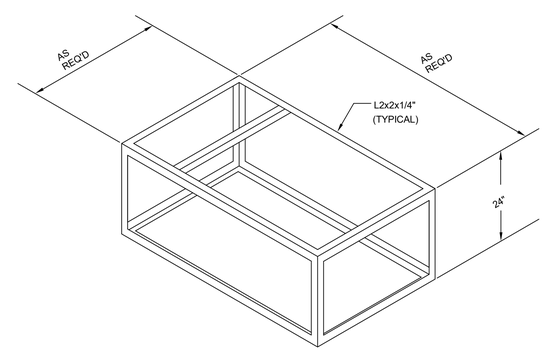

NOTE:
1. COVER TOP, BOTTOM, AND EXPOSED SIDES WITH 20 GA. SHEET METAL. SEAL ALL JOINTS AIR TIGHT
2. COVER ALL INTERIOR SURFACES OF PLENUM WITH 1" 3# DENSITY COATED FIBERGLASS LINER.

3 VERTICAL AIR HANDLER PLENUM SUPPORT

SCALE: NOT TO SCALE

Renovations to Jonesboro Recreational Center

Jonesboro Arkansas Phase II

BRACKETT KRENNERICH architects
100 East Huntington Ave. Suite D P.O. Box 1655
870-932-0571 Fax 870-932-0975
www.bkarchts.com

Revision Schedule			
Tag	Rev. Description	Rev. Date	Issued by

CERTIFICATE OF AUTHORIZATION GARVER LLC No. 766 ARKANSAS ENGINEERS

STATE OF ARKANSAS LICENSED PROFESSIONAL ENGINEER No. 19630 BRIAN C. ASH

Commission Number 2127

M502

Date: February 25 2022

HVAC DETAILS

C:\Users\bceslick\Documents\Jonesboro Rec Center R20_bceslickTPZNZ.rvt
3/2/2022 9:59:54 AM

PACKAGED HEAT PUMP AIR CONDITIONING UNIT SCHEDULE

					CONDENSER							EVAPORATOR				HEAT PUMP		ELECTRIC HEAT				SUPPLY FAN							ELECTRICAL			
DESIGNATION	REFERENCE PRODUCT	TOTAL SUPPLY AIRFLOW (CFM)	OUTSIDE AIRFLOW (CFM)	FILTER TYPE	REFRIGERANT TYPE	NUMBER OF CONDESNER FANS	AMBIENT AIR TEMP (DEG. F.)	NOMINAL COOLING (TONS)	COMPRESSOR TYPE	NUMBER OF COMPRESSORS	# OF COOLING STAGES	TOTAL CAPACITY (MBH)	SENSIBLE CAPACITY (MBH)	ENTERING DB/WB (DEG. F.)	LEAVING DB/WB (DEG. F.)	CAPACITY @ 47 DEG. F.	CAPACITY @ 17 DEG. F.	TOTAL CAPACITY (MBH)	ELECTRICAL INPUT (KW)	# OF STAGES	EAT/LAT (DEG. F.)	TOTAL AIRFLOW (CFM)	NUMBER OF FANS	DRIVE TYPE	T.S.P. (IN. W.G.)	E.S.P. (IN. W.G.)	MHP	BHP	VOLTS/ PHASE/ HZ	MCA	MOCP	NOTES
AHU-2	TEMPMASTER XYE05A2C	1600	300	MERV 13	R410A	1	95	4	SCROLL	1	1	46.6	34.5	78.9/65	56.7/54.5	46	26	22	6.5	1	74/88	1600	1	BELT	1.3	1.0	2.9	1.22	230/3/60	44.1	50	1
AHU-3	TEMPMASTER XP150E36R2B	4000	1100	MERV 13	R410A	4	95	12.5	SCROLL	2	2	143.8	96.3	80.5/67	55.9/54.5	135	90	115.9	34	2	74/90	4000	1	BELT	1.83	1.0	5.0	3.18	230/3/60	173.3	200	1, 2, 3
AHU-4	TEMPMASTER XP150E36R2B	4000	1100	MERV 13	R410A	4	95	12.5	SCROLL	2	2	143.8	96.3	80.5/67	55.9/54.5	135	90	115.9	34	2	74/90	4000	1	BELT	1.83	1.0	5.0	3.18	230/3/60	173.3	200	1, 2, 3

NOTES:
1. PROVIDE WITH 7-DAY PROGRAMMABLE THERMOSTAT.
2. PROVIDE WITH COMPONENTS AND CONTROLS AS REQUIRED FOR 100% AIR-SIDE ECONOMIZER OPERATION BASED ON OUTDOOR AIR ENTHALPY.
3. PROVIDE WITH RETURN AIR AND SUPPLY AIR DUCT SMOKE DETECTORS.

HEAT PUMP UNIT SCHEDULE

				COOLING				HEATING				
DESIGNATION	REFERENCE PRODUCT	NOMINAL TONS	REFRIGERANT TYPE	AMBIENT TEMPERATURE (DEG. F.)	TOTAL CAPACITY (MBH)	# OF COOLING STAGES	EER	TOTAL CAPACITY (MBH)	# OF HEATING STAGES	VOLTAGE/PHASE/HZ	MCA	MOCP	ACCESSORIES
HP-1	SAMSUNG/AM060MXMDCH/AA	5	R410A	96.1	60000	MODULATING	10.3	64000	MODULATING	208/1/60	32	50	FURNISH WITH LOW AMBIENT CONTROL AND 7-DAY PROGRAMMABLE THERMOSTAT.
HP-2	SAMSUNG/AC036BXSCCH/AA	3	R410A	96.1	36000	MODULATING	12.3	40000	MODULATING	208/1/60	31.3	40	OUTDOOR UNIT POWERS INDOOR UNIT. FURNISH WITH LOW AMBIENT CONTROL AND 7-DAY PROGRAMMABLE THERMOSTAT.

INDOOR AIR HANDLING UNIT SCHEDULE

						COOLING				HEATING			ELECTRICAL			
DESIGNATION	REFERENCE PRODUCT	TOTAL AIRFLOW (CFM)	OSA FLOW (CFM)	E.S.P. (IN W.C.)	FILTER	TOTAL CAPACITY (MBH)	SENSIBLE CAPACITY (MBH)	EAT DB/WB (DEG. F.)	LAT DB/WB (DEG. F.)	HEAT SOURCE	TOTAL CAPACITY (MBH)	EAT/LAT (DEG. F.)	VOLTAGE / PHASE / HZ	MCA	MOCP	REMARKS
IU-1	SAMSUNG/AM072TNZDCH/AA	1768	360	1	1" MERV 13	58000	46500	80/67	55/55	HEAT PUMP	46500	68	208/1/60	7.2	15	FURNISH WITH 1" FILTER BOX KIT.
IU-2	SAMSUNG/AC036KNZDCH/AA	1165	150	1	1" MERV 13	36000	28800	80/67	55/55	HEAT PUMP	4000	68	-	-	-	FURNISH WITH 1" FILTER BOX KIT. INDOOR UNIT POWERED BY OUTDOOR UNIT. POWER WIRE FURNISHED BY ELECTRICAL CONTRACTOR.

EXHAUST FAN SCHEDULE

DESIGNATION	REFERENCE PRODUCT	TYPE	SERVES	MAX AIR FLOW RATE (CFM)	TOTAL STATIC PRESSURE (IN. W.G.)	DRIVE	WEIGHT (LBS)	SONES	POWER (W)	VOLTS / PHASE	MOTOR HP	ACCESSORIES
EF-1	COOK 100SQN17DEC	CENTRIFUGAL INLINE	TOILETS	600	0.4	DIRECT	60	6.8	89	120/1	1/4	FURNISH WITH FAN-MOUNTED SPEED CONTROLLER, BACKDRAFT DAMPER, AND ELECTRICAL DISCONNECT.

LOUVERS

DESIGNATION	REFERENCE PRODUCT	WIDTH (INCHES)	HEIGHT (INCHES)	DEPTH (INCHES)	MINIMUM FREE AREA (SQ. FT.)	AIRFLOW RATE (CFM)	VELOCITY (FPM)	AIR PRESSURE DROP (IN. W.G.)	FINISH	REMARKS
LV-1	RUSKIN ELF6375DX	18	18	6	1.0	600	600	0.045	PER ARCHITECT	FURNISH WITH BIRDSCREEN AND INTEGRAL MOUNTING FLANGE.

FABRIC DUCT DIFFUSER SCHEDULE

DESIGNATION	MANUFACTURER/FLOW MODEL	LENGTH (FT)	SIZE (ROUND)	INLET ESP	CFM	INSTALLATION TYPE	DISPERSION TYPE/LOCATION	NOTES
FDD-1	PRIHODA/LASER CUT PERFORATIONS	20.5'	24	.5" WG	4000	SINGLE TRACK WITH INTERNAL RINGS	N/A	1,2,3,4
FDD-2	PRIHODA/LASER CUT PERFORATIONS	30.5'	18	.38" WG	1955	SINGLE TRACK WITH INTERNAL RINGS	PERFORATIONS- .5" 129°,161°, 199°, & 231°	1,2,3,4
FDD-3	PRIHODA/LASER CUT PERFORATIONS	18.83'	24	.5" WG	4000	SINGLE TRACK WITH INTERNAL RINGS	N/A	1,2,3,4
FDD-4	PRIHODA/LASER CUT PERFORATIONS	39.25'	18	.38" WG	2375	SINGLE TRACK WITH INTERNAL RINGS	PERFORATIONS- .5" 129°,161°, 199°, & 231°	1,2,3,4
FDD-5	PRIHODA/LASER CUT PERFORATIONS	24.75'	18	.38" WG	1535	SINGLE TRACK WITH INTERNAL RINGS	PERFORATIONS- .5" 129°,161°, 199°, & 231°	1,2,3,4

NOTES:
1. ALL SUSPENSION AND MOUNTING MATERIALS ARE TO BE IN GALVANIZED STEEL
2. ALL LENGTHS ARE APPROXIMATE AND MUST BE FIELD VERIFIED BY THE CONTRACTOR BEFORE ORDERING
3. PERFORATION LOCATIONS TO BE REVIEWED AND VERIFIED DURING SUBMITTAL
4. FABRIC TO BE EQUAL TO PRIHODA CLASSIC (PERMEABLE) UL CLASSIFIED (723/2518)

SEQUENCE OF OPERATIONS:

PACKAGED DX HEAT PUMP AIR HANDLING UNIT (AHU-2)

A. THE PACKAGED DX AIR HANDLING UNIT SHALL BE PROVIDED WITH FACTORY-MOUNTED CONTROLS.
B. THE SYSTEM SHALL OPERATE TO CONTROL ROOM TEMPERATURE SETPOINT BASED ON INPUT FROM A FACTORY SUPPLIED 7-DAY PROGRAMMABLE THERMOSTAT.

PACKAGED DX HEAT PUMP AIR HANDLING UNIT W/ AIRSIDE ECONOMIZER (AHU-3 AND AHU-4)

A. THE PACKAGED DX AIR HANDLING UNIT SHALL BE PROVIDED WITH FACTORY-MOUNTED CONTROLS.
B. THE SYSTEM SHALL OPERATE TO CONTROL ROOM TEMPERATURE SETPOINT BASED ON INPUT FROM A FACTORY SUPPLIED 7-DAY PROGRAMMABLE THERMOSTAT.
C. LOCATE SMOKE DETECTOR IN THE RETURN INTAKE AND SUPPLY DISCHARGE OF THE AIR HANDLING UNIT. UPON ACTIVATION OF THE SMOKE DETECTOR, THE UNIT SUPPLY FAN SHALL BE DE-ENERGIZED AND THE UNIT SHALL BE TURNED OFF. THE SMOKE DETECTOR SHALL HAVE A MANUAL RESET.
D. WHEN THE OURDOOR AIR ENTHALPY IS LESS THAN THE INDOOR AIR ENTHALPY SETPOINT, THE UNIT SHALL OPERATE IN 100% AIRSIDE ECONOMZIER MODE OF OPERATION.

SPLIT DX HEAT PUMP SYSYEM (HP-1 AND HP-2)

A. THE SYSTEMT SHALL BE PROVIDED WITH FACTORY-MOUNTED CONTROLS.
B. THE SYSTEM SHALL OPERATE TO CONTROL ROOM TEMPERATURE SETPOINT BASED ON INPUT FROM A FACTORY SUPPLIED 7-DAY PROGRAMMABLE THERMOSTAT.

INLINE EXHAUST FAN (EF-1)

A. EXHAUST FAN SHALL OPERATE CONTINUOUSLY DURING OCCUPIED HOURS BASED ON A 7-DAY BUILDING OCCUPANCY SCHEDULE.

AIR DEVICE SCHEDULE

DESIGNATION	REFERENCE PRODUCT	MAX AIRFLOW (CFM)	NECK SIZE	PANEL SIZE	MAX P.D. (IN. W.C.)	MAX N.C.	FINISH	REMARKS
SUPPLY								
A	TITUS TMS	100	6" ROUND	24" X 24"	0.05	25	WHITE	PROVIDE WITH OBD, MOLDED INSULATION BLANKET AND BORDER TYPE COMPATIBLE WITH LAY-IN CEILING.
B	TITUS TMS	225	8" ROUND	24" X 24"	0.05	25	WHITE	PROVIDE WITH OBD, MOLDED INSULATION BLANKET AND BORDER TYPE COMPATIBLE WITH LAY-IN CEILING.
C	TITUS TMS	325	10" ROUND	24" X 24"	0.05	25	WHITE	PROVIDE WITH OBD, MOLDED INSULATION BLANKET AND BORDER TYPE COMPATIBLE WITH LAY-IN CEILING.
RETURN/EXHAUST								
1	TITUS PAR	225	8" ROUND	24" X 24"	0.08	25	WHITE	PROVIDE WITH OBD AND BORDER TYPE COMPATIBLE WITH LAY-IN CEILING.
2	TITUS PAR	325	10" ROUND	24" X 24"	0.08	25	WHITE	PROVIDE WITH OBD AND BORDER TYPE COMPATIBLE WITH LAY-IN CEILING.
3	TITUS PAR	600	16" ROUND	24" X 24"	0.1	25	WHITE	PROVIDE WITH OBD AND BORDER TYPE COMPATIBLE WITH LAY-IN CEILING.
4	TITUS EGC	1500	20" X 20"	24" X 24"	0.1	25	WHITE	PROVIDE WITH BORDER TYPE COMPATIBLE WITH LAY-IN CEILING.
5	TITUS 350RL	1600	24" x 20"	26" X 22"	0.06	25	WHITE	
6	TITUS 350RL	2900	30" x 24"	32" X 26"	0.08	25	WHITE	

ROOFTOP VENTILATOR SCHEDULE

DESIGNATION	REFERENCE PRODUCT	TYPE	AIRFLOW (CFM)	HOOD SIZE	THROAT SIZE	HOOD HEIGHT	HOOD FREE AREA (SQ. FT.)	PRESSURE DROP (IN.W.G.)	REMARKS
RV-1	COOK PR-12	INTAKE	510	29"Ø	12"x12"	10"	2.04	0.05	FURNISH WITH INTEGRAL BIRDSCREEN, BACKDRAFT DAMPER, AND ROOF CURB.

CERTIFICATE OF AUTHORIZATION GARVER LLC No. 766 ARKANSAS ENGINEERS

STATE OF ARKANSAS LICENSED PROFESSIONAL ENGINEER No. 19630 25 JAN C. KRICK

Commission Number 2127

M601

Date: February 25 2022

Revision Schedule

Tag	Rev. Description	Rev. Date	Issued by

Renovations to
Jonesboro Recreational Center
Jonesboro Arkansas
Phase II

BRACKETT KRENNERICH architects
100 East Huntington Ave. Suite D P.O. Box 1655 870-932-0571 Fax 870-932-0975 www.bkarchts.com

HVAC SCHEDULES

C:\Users\bceslick\Documents\Jonesboro Rec Center R20_bceslickTPZNZ.rvt
3/2/2022 9:59:59 AM

GENERAL PLUMBING NOTES

1. PROVIDE ALL REQUIRED PIPE, FITTING, VALVES, HANGERS, SUPPORTS, SLEEVES, INSERTS, TRAPS AND OTHER SUCH EQUIPMENT, ITEMS AND DEVICES, AS MAY BE REQUIRED FOR A COMPLETE AND OPERATING SYSTEM OR SYSTEMS, INCLUDING ALL POINTS AUXILIARY TO THE SYSTEM OR SYSTEMS WHETHER OR NOT SPECIFICALLY SET FORTH HEREIN AND/OR SHOWN ON THE DRAWINGS.
2. WORK WILL BE EXECUTED AND INSPECTED IN ACCORDANCE WITH LOCAL AND STATE CODES, LAWS, ORDINANCES, RULES AND REGULATIONS APPLICABLE TO THE PARTICULAR CLASS OF WORK AND ANY FEES IN CONNECTION THEREWITH SHALL BE PAID BY THE CONTRACTOR.
3. ALL PLUMBING SHALL BE INSTALLED IN ACCORDANCE WITH THE 2018 INTERNATIONAL PLUMBING CODE AND IN COMPLIANCE WITH THE REQUIREMENTS OF THE LOCAL AUTHORITY HAVING JURISDICTION.
4. ALL DRAWINGS ARE DIAGRAMMATIC AND INDICATE THE GENERAL ARRANGEMENTS OR GEOMETRICAL RELATIONSHIPS OF EQUIPMENT AND SERVICES. THEY ARE NOT INTENDED TO SPECIFY OR SHOW EVERY OFFSET, SEQUENCE, DEVICE, OPTION, FITTING, OR COMPONENT.
5. INFORMATION AND COMPONENTS SHOWN ON RISER DIAGRAMS OR DETAILS, BUT NOT SHOWN ON PLANS, AND VICE VERSA, SHALL BE PROVIDED AS IF EXPRESSLY REQUIRED BY BOTH.
6. UNLESS NOTED OTHERWISE, THE INDICATION AND/OR DESCRIPTION OF ANY ITEM, IN THE DRAWINGS OR SPECIFICATIONS CARRIES WITH IT THE INSTRUCTION TO PROVIDE THE ITEM.
7. CONTRACTOR WILL BE RESPONSIBLE FOR COORDINATING ALL WORK WITH THAT OF OTHER TRADES. REFER TO ARCHITECTURAL, ELECTRICAL, AND OTHER DRAWINGS FOR COMPLETE INFORMATION.
8. NEATLY AND CONTINUOUSLY SEAL WITH WHITE SEALANT AROUND ALL COUNTERTOP AND WALL HUNG LAVATORIES, WALL HUNG URINALS, AND WALL MOUNTED WATER CLOSETS. SEAL UNDER RIM OF ANY NEW STAINLESS STEEL SINK INSERTS WITH CLEAR SEALANT.
9. FIRESTOP ANY PENETRATIONS THROUGH RATED WALLS. SEAL ANY NEW EXTERIOR WALL PENETRATIONS WATER-TIGHT. REFER TO ARCHITECTURAL FLOOR PLAN SHEETS FOR EXACT LOCATION OF ALL RATED AND NON-RATED WALL LOCATIONS.

10 PROVIDE CONCRETE HOUSEKEEPING PAD PER DETAIL SHEETS UNDER EACH PIECE OF FLOOR MOUNTED PLUMBING EQUIPMENT.

PLUMBING MATERIALS NOTES

A. NEW DOMESTIC WATER PIPING WITHIN THE BUILDING AND ABOVE GRADE SHALL BE TYPE 'L' DRAWN COPPER WITH WROUGHT COPPER FITTINGS AND LEAD FREE SOLDER JOINTS AND SHALL BE INSTALLED OVEREAD, ABOVE CEILINGS, OR IN CHASE WALL CAVITIES. DO NOT INSTALL ANY NEW DOMESTIC WATER PIPING OVER NEW ELECTRICAL GEAR.

B. FURNISH ELMDOR 'AT' SERIES ACCESS DOORS IN GYP BOARD CEILINGS OR WALLS FOR VALVE ACCESS AT LOCATIONS INDICATED. NOTE: VALVES MAY BE ARRANGED AS REQUIRED TO FACILITATE ACCESS; AS SHOWN ON PLANS, VALVES HAVE BEEN LOCATED FOR DIAGRAMMATIC PURPOSES ONLY.

C. INSULATE ALL DOMESTIC HOT AND COLD WATER PIPING PER SPECIFICATION 23 07 00 TABLE 2.

D. LABEL ALL NEW DOMESTIC WATER PIPING IN ACCORDANCE WITH ANSI/ASME A13.1 STANDARD FOR THE IDENTIFICATION OF PIPES.

E. INSTALL ALUMINUM JACKET ON ALL NEW INSULATED DOMESTIC WATER PIPING TO A HEIGHT OF 6'-0" ABOVE FINISH FLOOR IN MECHANICAL SPACES OR AT AREAS WHERE DAMAGE TO THE INSULATION MAY OCCUR.

F. NEW SANITARY SEWER, DRAIN AND VENT PIPING (DWV) WITHIN THE BUILDING, ABOVE SLAB, SHALL BE CAST IRON NO-HUB WITH STANDARD DUTY COUPLINGS.

G. NEW ABOVE SLAB SANITARY SEWER AND DRAIN PIPING WITHIN THE BUILDING, 3 INCHES AND LARGER, SHALL BE SLOPED AT1/8 INCH PER FOOT, AND PIPE SIZES 2 INCH AND SMALLER SHALL BE SLOPED AT 1/4 INCH PER FOOT. NEW VENT PIPING WITHIN THE BUILDING SHALL BE GRADED AND CONNECTED TO DRAIN BACK TO DRAINAGE PIPING BY GRAVITY.

DOUBLE LINE PIPING LEGEND

DOMESTIC COLD WATER

DOMESTIC HOT WATER

SS SANITARY SEWER BELOW SLAB

VENT PIPING

ABBREVIATIONS

CO	CLEANOUT PLUG
FCO	FLOOR CLEANOUT
WCO	WALL CLEANOUT
COTG	CLEANOUT TO GRADE
TWCOTG	TWO-WAY CLEANOUT TO GRADE
VTR	VENT THROUGH ROOF
RPBP	REDUCED PRESSURE ZONE BACKFLOW PREVENTER
FD	FLOOR DRAIN
AFF	ABOVE FINISHED FLOOR
AFG	ABOVE FINISHED GRADE
BFF	BELOW FINISH FLOOR
CW	DOMESTIC COLD WATER
HW	DOMESTIC HOT WATER
HWR	DOMESTIC HOT WATER RETURN
PRV	PRESSURE REDUCING VALVE (REGULATOR)
OPP.HD.	OPPOSITE HAND
DWV	DRAIN WASTE AND VENT
GPM	GALLONS PER MINUTE
GPF	GALLONS PER FLUSH
GC	GAS COCK
CFH	CUBIC FEET PER HOUR
MBH	THOUSAND BTU PER HOUR
IV	ISOLATION VALVE

SINGLE LINE PIPING SYMBOLS

DOMESTIC WATER

ELBOW UP

ELBOW DOWN

TEE OUTLET UP

TEE OUTLET DOWN

TEE PLAN VIEW

TEE PLAN VIEW

SANITARY DRAINAGE

ELBOW UP

ELBOW DOWN

VALVE IN DROP

VALVE IN CENTER DROP

DIRECTION OF FLOW

UNION

STRAINER WITH BLOWDOWN VALVE

CONCENTRIC REDUCER

PIPE FLANGE

FLEXIBLE CONNECTION

VALVE SYMBOLS

BALL VALVE (BV)

BUTTERFLY VALVE (BFV)

CHECK VALVE (CV)

GATE VALVE (GV)

ANGLE VALVE (AV)

PRESSURE REDUCING VALVE (PRV)

SOLENOID VALVE (SV)

GARVER LLC No. 766 — CERTIFICATE OF AUTHORIZATION — ARKANSAS ENGINEERING

STATE OF ARKANSAS — LICENSED PROFESSIONAL ENGINEER — No. 19630 — MICHAEL A. CLEMENTS

Commission Number 2127

P001

Date: February 25 2022

Renovations to
Jonesboro Recreational Center
Jonesboro Arkansas
Phase II

BRACKETT KRENNERICH architects
100 East Huntington Ave. Suite D P.O. Box 1655 870-932-0571 Fax 870-932-0975 www.bkarchts.com

Revision Schedule			
Tag	Rev. Description	Rev. Date	Issued by

GENERAL NOTES AND LEGENDS

C:\Users\bceslick\Documents\Jonesboro Rec Center R20_bceslickTPZNZ.rvt
3/2/2022 10:00:00 AM

KEYED NOTES:

1. REMOVE EXISTING PLUMBING FIXTURE, INCLUDING ALL ACCESSORIES, VALVES, AND MOUNTING HARDWARE. REMOVE ASSOCIATED DOMESTIC HOT/COLD WATER PIPING BACK TO MAIN AND CAP. REMOVE ASSOCIATED SEWER PIPING BACK TO SANITARY MAIN AND CAP.
2. REMOVE EXISTING SHOWER HEAD AND MIXING VALVE. REFER TO ARCHITECTURAL FOR REMOVAL OF EXISTING TILE SHOWER STALL. REMOVE EXISITNG HOT WATER AND COLD WATER PIPING BACK TO MAIN PIPING AND CAP AT POINT OF DEMOLITION. REMOVE ASSOCIATED SEWER PIPING BACK TO SANITARY MAIN AND CAP.
3. EXISTING PLUMBING FIXTURE TO REMAIN.
4. REMOVE EXISTING DOMESTIC COLD/HOT WATER STUBOUT THRU WALL AND BRANCH PIPING BACK TO MAIN. CAP AT POINT OF DEMOLITION.

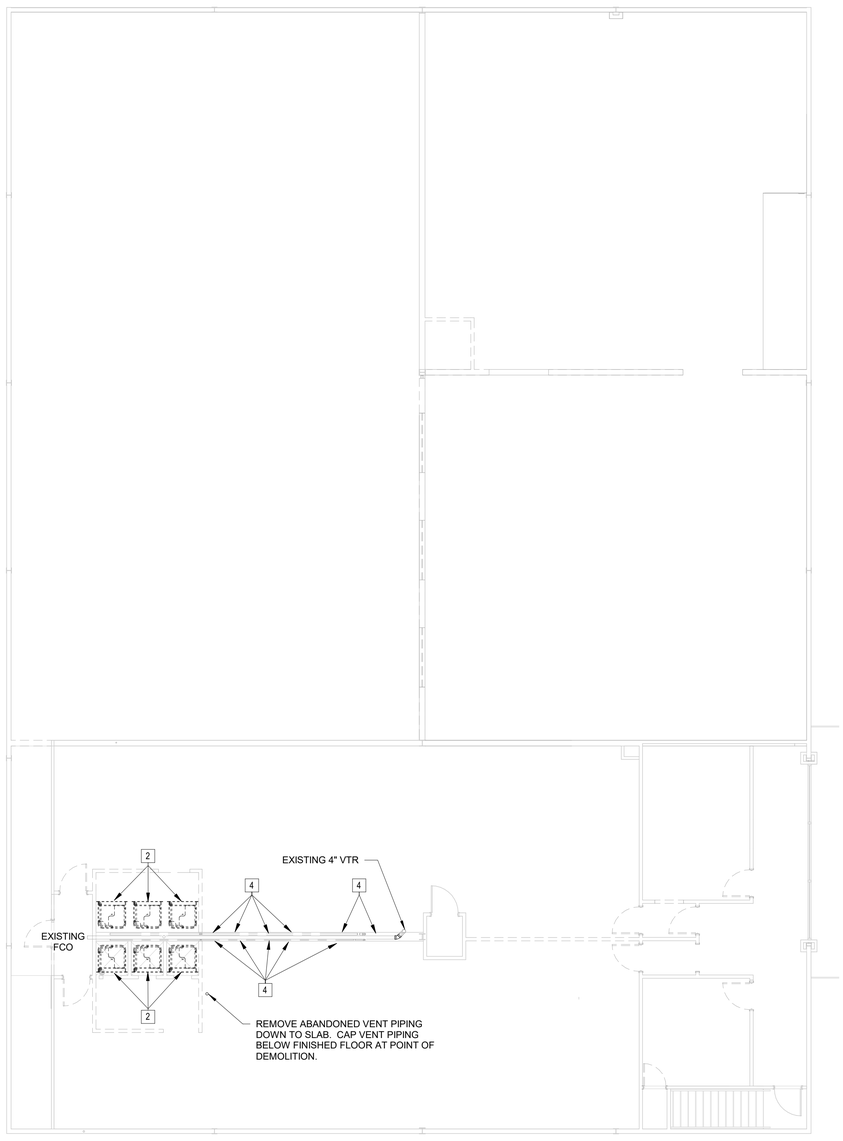

SECOND FLOOR PLUMBING PLAN - DEMO

SCALE: 1/8" = 1'-0"

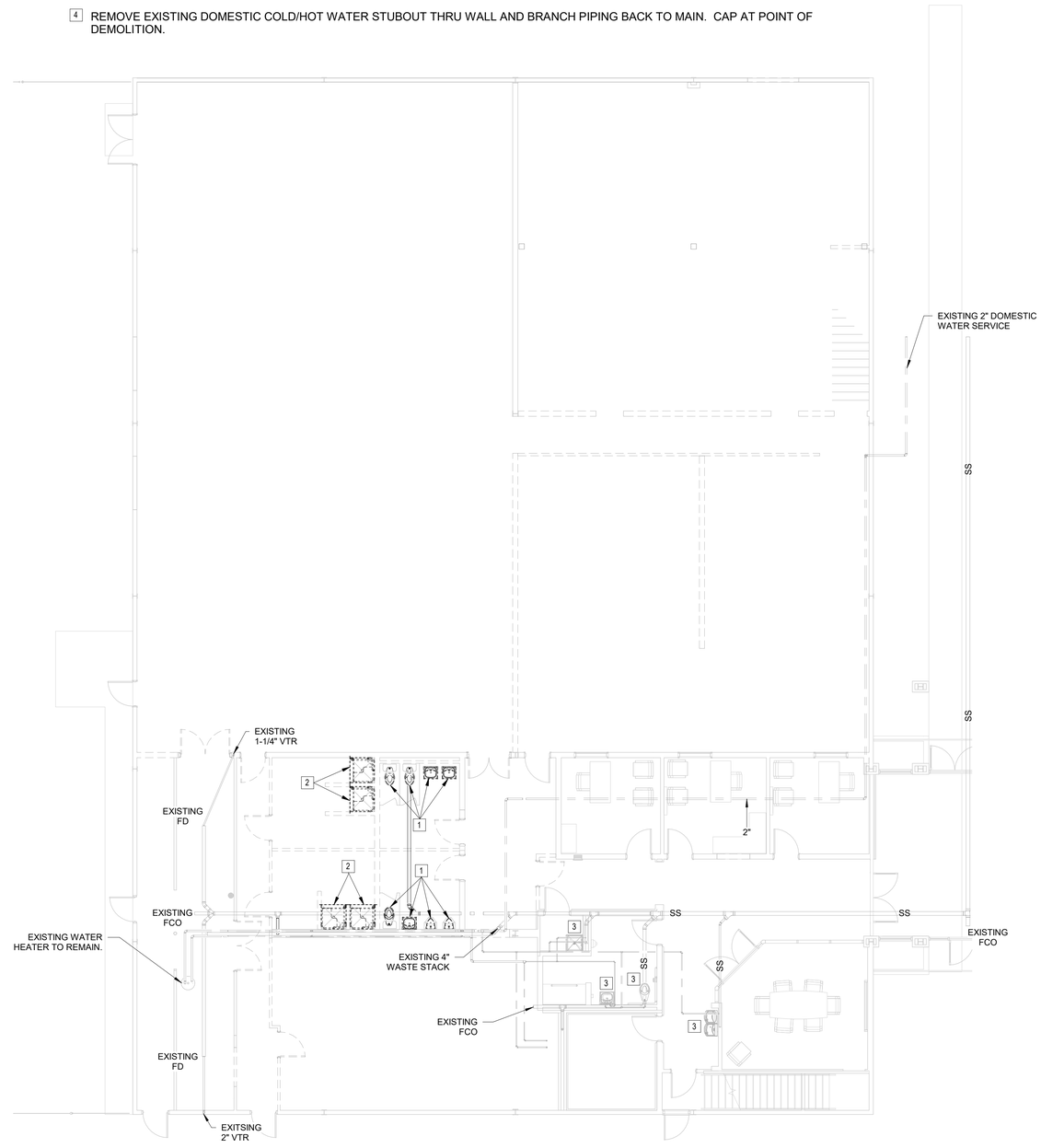

FIRST FLOOR PLUMBING PLAN -DEMO

SCALE: 1/8" = 1'-0"

CERTIFICATE OF AUTHORIZATION GARVER LLC No. 766 ARKANSAS ENGINEERING

STATE OF ARKANSAS LICENSED PROFESSIONAL ENGINEER No. 19630 BRIAN C. KISAK

Commission Number 2127

P101

Date: February 25 2022

Revision Schedule

Tag	Rev. Description	Rev. Date	issued by

Renovations to
Jonesboro Recreational Center
Jonesboro Arkansas
Phase II

BRACKETT KRENNERICH architects
100 East Huntington Ave. Suite D P.O. Box 1655
870-932-0571 Fax 870-932-0975
www.bkarchts.com

PLUMBING PLAN -DEMO

C:\Users\bceslick\Documents\Jonesboro Rec Center R20_bceslickTPZNZ.rvt
3/2/2022 10:00:04 AM

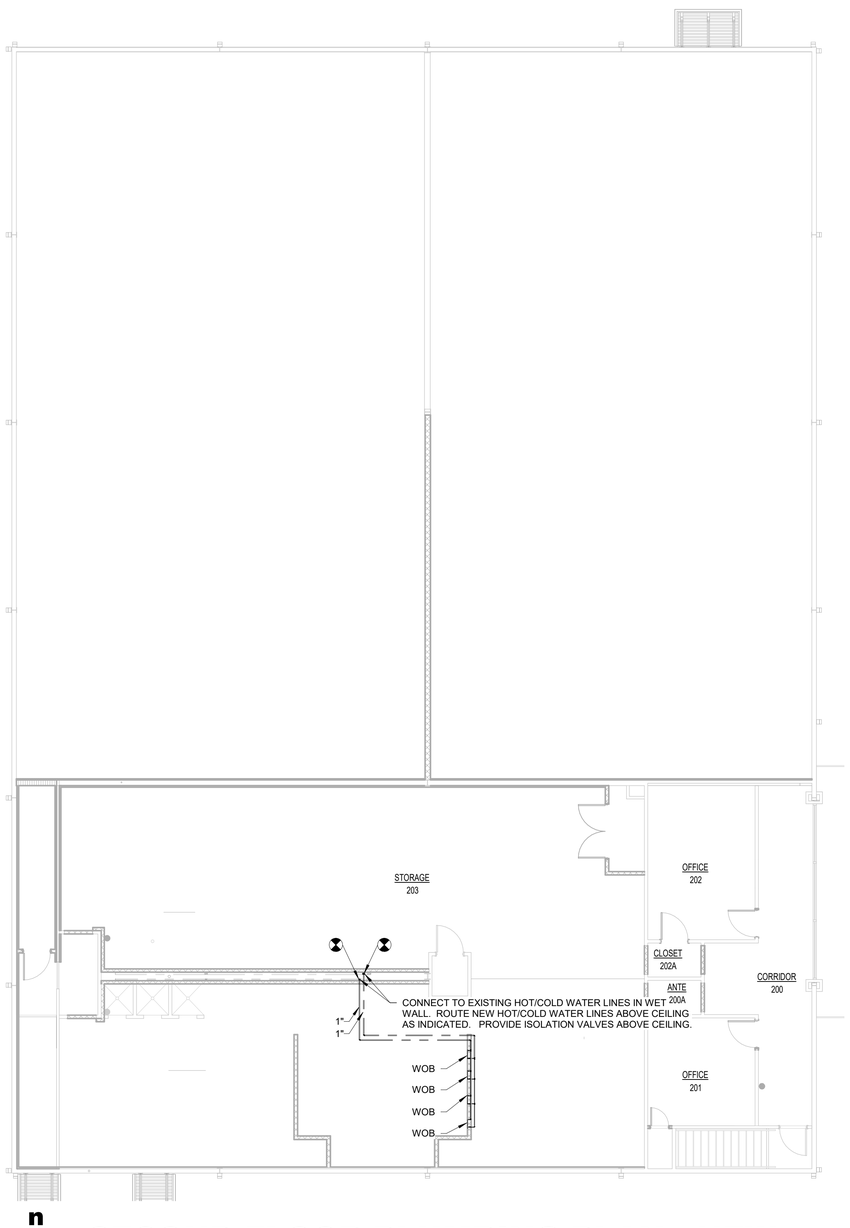

SECOND FLOOR PLUMBING PLAN - NEW

SCALE: 1/8" = 1'-0"

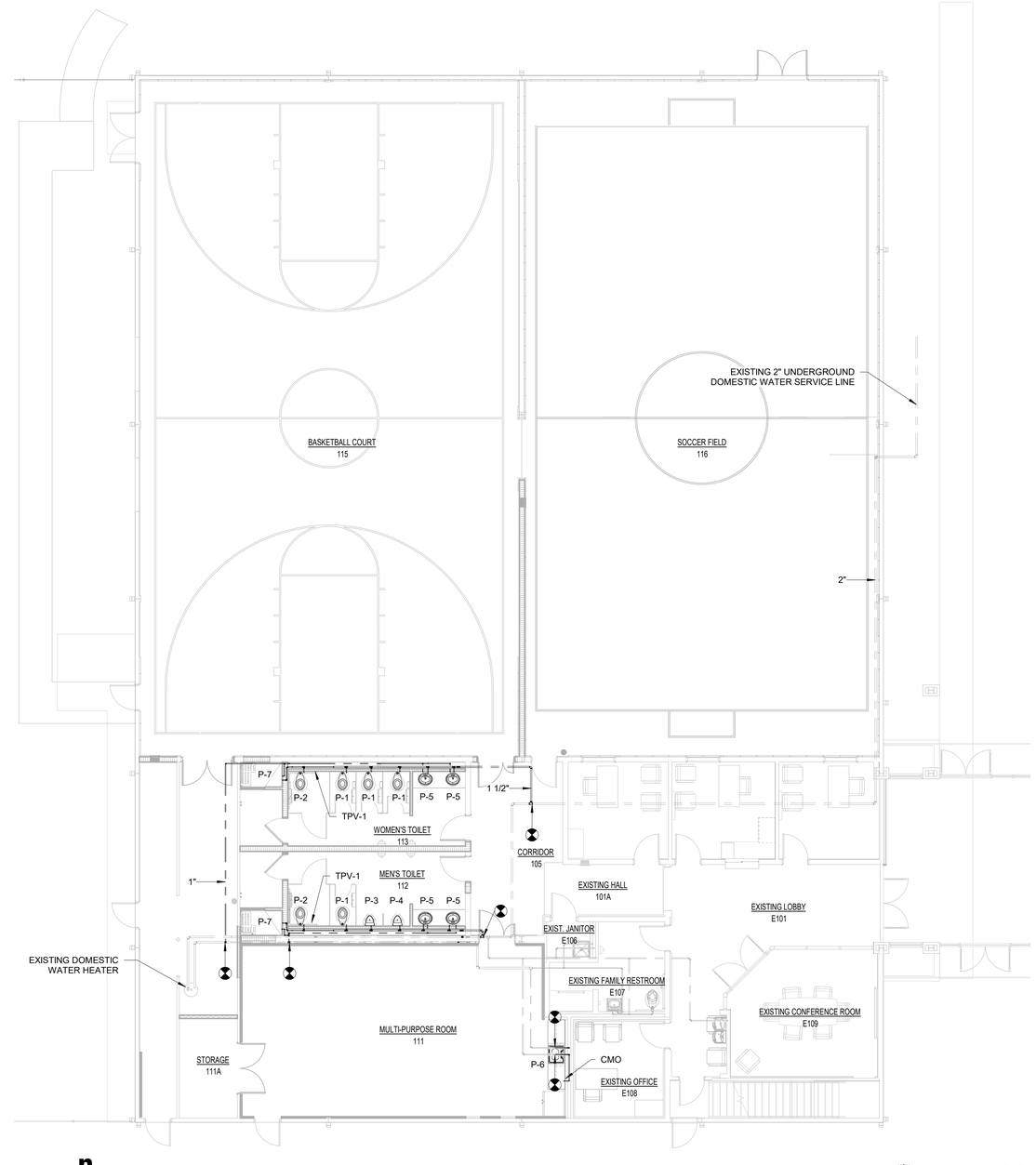

FIRST FLOOR PLUMBING PLAN - NEW

SCALE: 1/8" = 1'-0"

Renovations to Jonesboro Recreational Center

Jonesboro Arkansas
Phase II

BRACKETT KRENNERICH architects
100 East Huntington Ave. Suite D P.O. Box 1655
870-932-0571 Fax 870-932-0975
www.bkarchts.com

Revision Schedule			
Tag	Rev. Description	Rev. Date	Issued by

GARVER LLC No. 766 — CERTIFICATE OF AUTHORIZATION — ARKANSAS ENGINEERING

STATE OF ARKANSAS — LICENSED PROFESSIONAL ENGINEER — No. 19630 — BRIAN C. KNAPP

Commission Number 2127

P201

Date: February 25 2022

PLUMBING PLAN -NEW

C:\Users\beceslick\Documents\Jonesboro Rec Center R20_beceslickTPZNZ.rvt
3/2/2022 10:00:07 AM

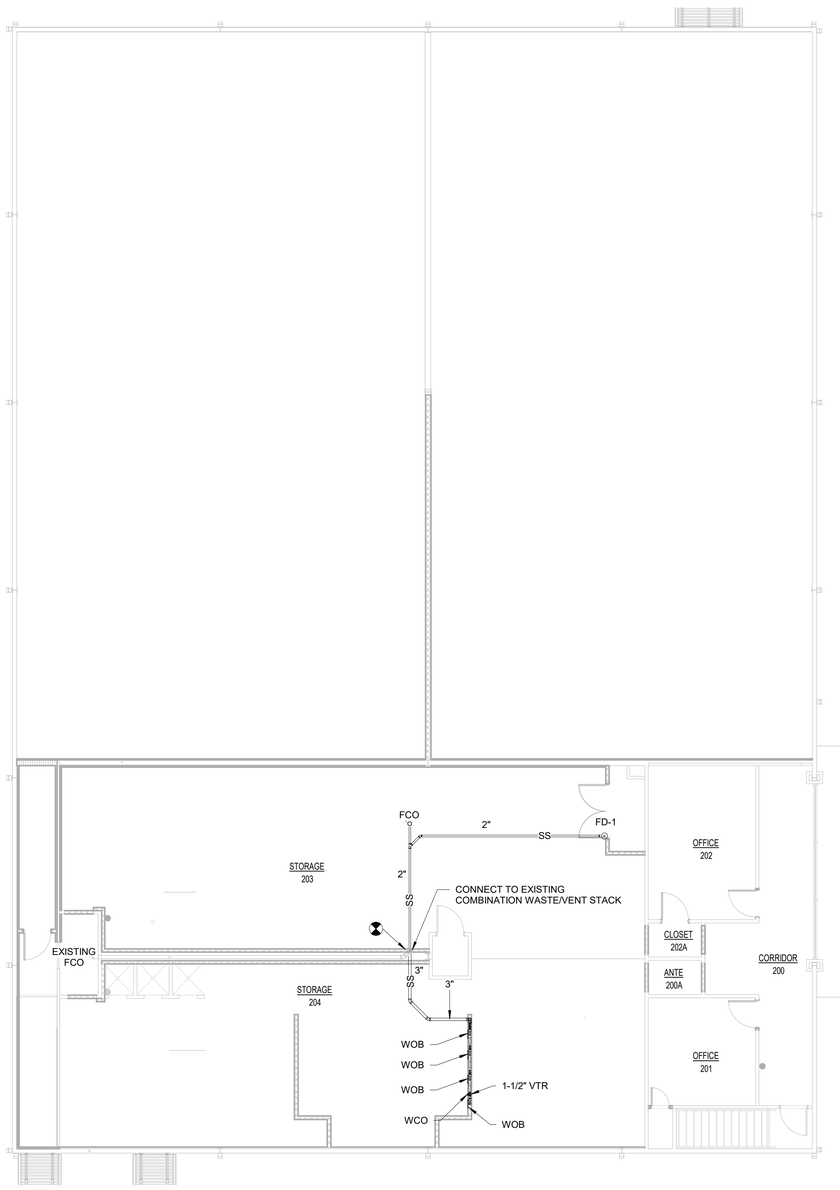

SECOND FLOOR SEWER PLAN - NEW

SCALE: 1/8" = 1'-0"

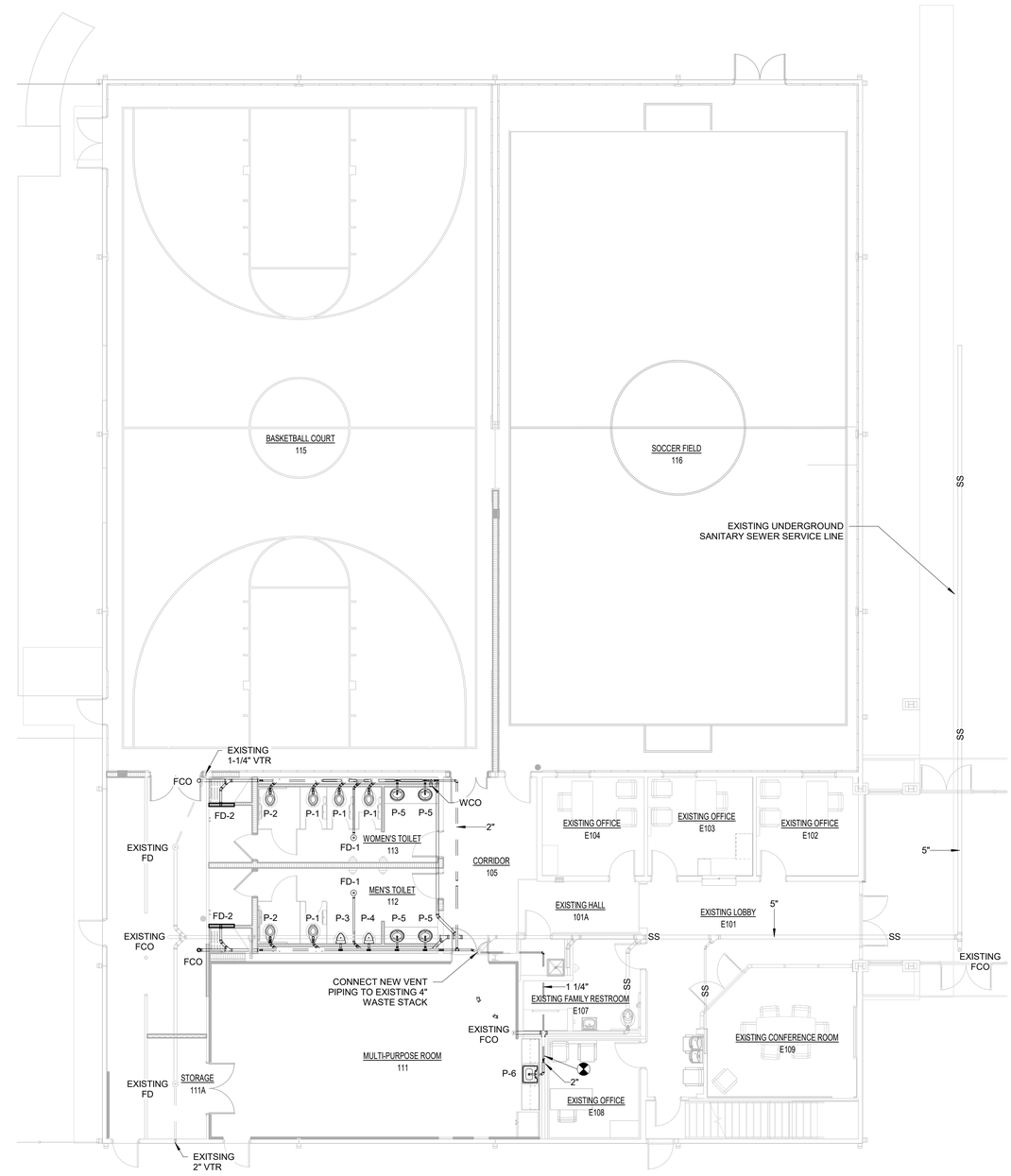

FIRST FLOOR SEWER PLAN - NEW

SCALE: 1/8" = 1'-0"

C:\Users\bceslick\Documents\Jonesboro Rec Center R20_bceslickTPZNZ.rvt
3/2/2022 10:00:12 AM

Renovations to Jonesboro Recreational Center

Jonesboro Arkansas Phase II

BRACKETT KRENNERICH architects
100 East Huntington Ave. Suite D P.O. Box 1655
870-932-0571 Fax 870-932-0975
www.bkarchts.com

Revision Schedule			
Tag	Rev. Description	Rev. Date	Issued by

GARVER LLC No. 766 — CERTIFICATE OF AUTHORIZATION — ARKANSAS ENGINEER

STATE OF ARKANSAS — LICENSED PROFESSIONAL ENGINEER — No. 19630 — 25 — N. C. SPRICK

Commission Number
2127

P202

Date: February 25 2022

SEWER PLAN -NEW

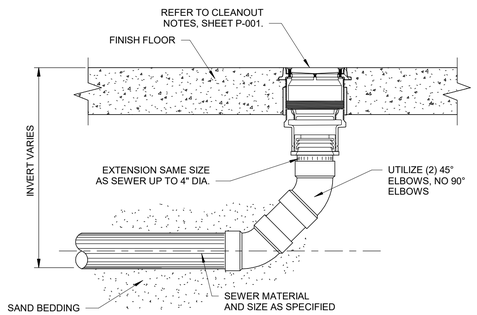

1 FLOOR CLEANOUT DETAIL
SCALE: NOT TO SCALE

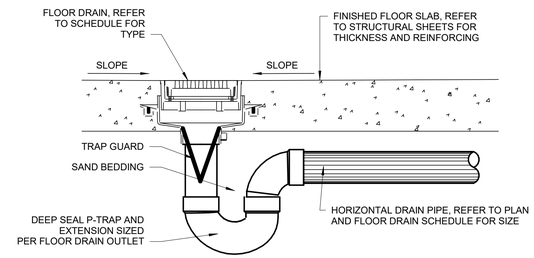

2 TYPICAL FLOOR & SHOWER DRAIN DETAIL
SCALE: NOT TO SCALE

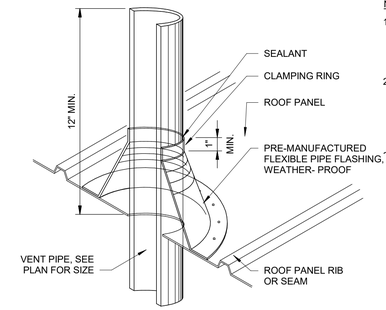

NOTES:

1. PAINT VENT TO MATCH ROOF IN ACCORDANCE WITH ARCHITECTURAL SPECIFICATIONS.
2. CENTER ALL VENT THRU ROOF PENETRATIONS BETWEEN ROOF SEAMS. DO NOT CUT ROOF SEAMS.
3. UTILIZE METALLIC PIPE FROM 6 INCHES BELOW ROOF LINE TO FINAL TERMINATION.

3 VENT THRU ROOF (VTR) DETAIL
SCALE: NOT TO SCALE

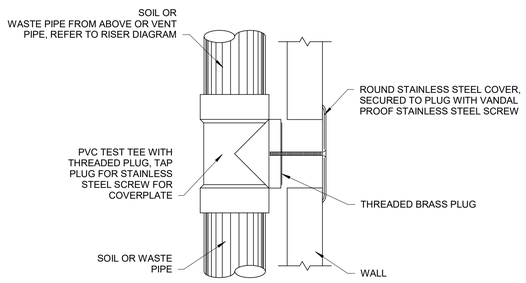

4 WALL CLEANOUT DETAIL
SCALE: NOT TO SCALE

PDI SIZING AND SELECTION TABLE				
PIPE SIZE	FIXTURE UNITS	PDI CROSS REFERENCE	OVERALL LENGTH	CONNECTION N.P.T.
1/2"	1 - 11	A	6-1/4"	1/2"
3/4"	12 - 32	B	7-1/4"	3/4"
1"	33 - 60	C	9-1/4"	1"
1-1/4"	61 - 113	D	9-1/2"	1"
1-1/2"	114 - 154	E	11-1/4"	1"
2"-3"	155 - 330	F	12"	1"

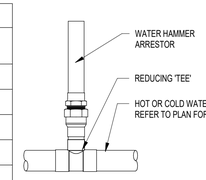

NOTES:

1. PLACE ARRESTOR AT END OF HEADER WITHIN SIX (6) FEET OF LAST FIXTURE.
2. PLACE ADDITIONAL ARRESTORS AT TWENTY (20) FOOT INTERVALS.
3. INSTALL ARRESTORS ON ALL HOT AND COLD WATER HEADERS THAT HAVE FAST ACTING VALVES LIKE FLUSHOMETERS AND SOLENOID VALVES.

5 WATER HAMMER ARRESTOR DETAIL
SCALE: NOT TO SCALE

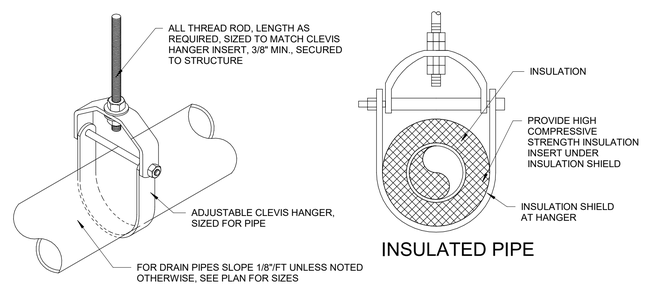

MINIMUM SUPPORT ALL THREAD ROD SIZE										
PIPE SIZE	1/2"	3/4"	1"	1-1/2"	2"	2-1/2"	3"	4"	5"	6"
ALL THREAD	3/8"	3/8"	3/8"	3/8"	3/8"	1/2"	1/2"	5/8"	5/8"	3/4"

MAX. PIPE/TUBING SUPPORT SPACING, FEET											
NOM. SIZE	1/2"	3/4"	1"	1 1/4"	1 1/2"	2"	2 1/2"	3"	4"	5"	6"
COPPER TUBING	5'	5'	6'	7'	8'	8'	9'	10'	12'	13'	14'
PVC PIPE	7'-10"	7'-10"	7'-10"	7'-10"	7'-10"	7'-10"	9'-10"	9'-10"	9'-10"	-	-

NOTES:

1. FOR TRAPEZE HANGER TAKE SPACING OF SMALLEST SIZE ON TRAPEZE.
2. UTILIZE THREADED ROD ANCHORS FOR ATTACHMENT TO EXISTING CONCRETE DECKS.
3. WHEN UTILIZING VEE BOTTOM HANGERS AND STEEL SUPPORT CHANNEL, INSTALL HANGERS AS CLOSE AS POSSIBLE TO THE CHANNEL JOINTS. LAP SUPPORT CHANNELS 2" BOTH ENDS.

6 PIPE HANGER DETAILS
SCALE: NOT TO SCALE

C:\Users\bceslick\Documents\Jonesboro Rec Center R20_bceslickTPZNZ.rvt
3/2/2022 10:00:15 AM

Renovations to Jonesboro Recreational Center
Jonesboro Arkansas Phase II

BRACKETT KRENNERICH architects
100 East Huntington Ave. Suite D P.O. Box 1655
870-932-0571 Fax 870-932-0975
www.bkarchts.com

Revision Schedule				
Tag	Rev. Description	Rev. Date	Issued by	

CERTIFICATE OF AUTHORIZATION GARVER LLC No. 766 ARKANSAS ENGINEERING

STATE OF ARKANSAS LICENSED PROFESSIONAL ENGINEER No. 19630 BRYAN C. ASHLEY

Commission Number 2127

P501

Date: February 25 2022

PLUMBING DETAILS

PLUMBING FIXTURE SCHEDULE

MARK	DESCRIPTION	MANUF. & MODEL	ACCESSORIES	P-TRAP SIZE	MIN. WASTE SIZE	COLD WATER SIZE	HOT WATER SIZE	REMARKS
P-1	WATER CLOSET	AMERICAN STANDARD 2234.001	FLOOR MOUNTED, FLOOR OUTLET, WHITE VITREOUS CHINA. FURNISH WITH SLOAN ROYAL 111 ESS-1.28-TMO HARDWIRED1.28 GPF EXPOSED MANUAL FLUSHOMETER WITH TRUE MECHANICAL OVERRIDE AND 'TP' TRAP PRIMER TUBE, AND AMERICAN STANDARD 5901.100 ELONGATED, OPEN FRONT SEAT.	INTEGRAL	3"	1"	-	TOP OF RIM AT 15" AFF. FIXTURE SHALL BE WATER SENSE CERTIFIED..
P-2	ADA COMPLIANT WATER CLOSET	AMERICAN STANDARD 3043.001	FLOOR MOUNTED, FLOOR OUTLET, WHITE VITREOUS CHINA. FURNISH WITH SLOAN ROYAL 111 ESS-1.6-YO-TMO-TP HARDWIRED 1.6 GPF EXPOSED SENSOR-OPERATED FLUSHOMETER WITH TRUE MECHANICAL OVERRIDE AND 'TP' TRAP PRIMER TUBE AND AMERICAN STANDARD 5901.100 ELONGATED, OPEN FRONT SEAT. 1.6 GPF.	INTEGRAL	3"	1"	-	TOP OF RIM AT 16-1/2" AFF. FIXTURE SHALL BE WATER SENSE CERTIFIED. 1.28 GPF UNITS ARE NOT CODED FOR TRAP PRIMER TUBE. REMOVE 1.6 GPF DIAPHRAGM AND INSTALL 1.28 GPF DIAPHRAGM.
P-3	URINAL	AMERICAN STANDARD 6590.001	WALL HUNG, WALL OUTLET, WHITE VITREOUS CHINA. FURNISH WITH SLOAN ROYAL 186-0.125 HARDWIRED EXPOSED SENSOR-OPERATED FLUSHOMETER WITH TRUE MECHANICAL OVERRIDE. 0.5 GPF. FURNISH JAY R. SMITH FLOOR MOUNTED URINAL SUPPORT.	INTEGRAL	2"	3/4"	-	INSTALL WITH FRONT RIM AT 23" TO 25" AFF. FIXTURE SHALL BE WATER SENSE CERTIFIED.
P-4	ADA COMPLIANT URINAL	AMERICAN STANDARD 6590.001	WALL HUNG, WALL OUTLET, WHITE VITREOUS CHINA. FURNISH WITH SLOAN ROYAL 186-0.125 HARDWIRED EXPOSED SENSOR-OPERATED FLUSHOMETER WITH TRUE MECHANICAL OVERRIDE. 0.5 GPF. FURNISH JAY R. SMITH FLOOR MOUNTED URINAL SUPPORT.	INTEGRAL	2"	3/4"	-	INSTALL WITH FRONT RIM AT 16" TO 18" AFF. FIXTURE SHALL BE WATER SENSE CERTIFIED.
P-5	ADA COMPLIANT LAVATORY	AMERICAN STANDARD 0490.011	COUNTER MOUNT, WHITE VITREOUS CHINA, 19" x 19" OVERALL DIMENSIONS, 15" x12-1/8" x.5-3/4" DEEP BOWL DIMENSIONS. FURNISH WITH SLOAN ETF-610-8-PLG-BDM-CP-0.5GPM-MLM-IR-BT-FCT HARD-WIRED SENSOR-OPERATED FAUCET WITH 0.5 GPM VANDAL RESISTANT AERATOR, BELOW DECK THERMOSTATIC MIXING VALVE (ADJUST FOR 110 DEG. F MAXIMUM), DEARBORN BRASS OPEN GRID STRAINER WITH TAILPIECE AND 701-1 CHROME PLATED CAST BRASS P-TRAP WALL EXTENSION AND ESCUTCHEON, AND BRASSCRAFT G2CR19 1/4 TURN SUPPLY STOPS. 0.5 GPM.	1-1/4"	2"	1/2"	1/2"	FURNISH WITH TRUEBRO SUPPLY AND WASTE COVERS. LOCATE FAUCET CONTROLS ADJACENT TO FIXTURE SUPPLY STOPS. FAUCET SHALL BE WATER SENSE CERTIFIED.
P-6	ADA SINGLE COMPARTMENT SINK	ELKAY LRAD221965	COUNTER MOUNTED, 18" x 14" x 6-3/8" DEEP BOWL, 19" x 22" x 6-1/2" OVERALL DIMENSIONS, STAINLESS STEEL. FURNISH WITH DEARBORN BRASS L7 SINK STRAINER WITH TAILPIECE AND 704-1 P-TRAP, BRASSCRAFT G2CR19X C SUPPLY STOPS AND DELTA B1310LF SINGLE LEVER FAUCET WITH 9-1/2" SWING SPOUT.	1-1/2"	2"	1/2"	1/2"	FAUCET SHALL BE WATER SENSE CERTIFIED.
P-7	ADA COMPLIANT SHOWER VALVE	SYMMONS 1-117VT-FS	CHROME PLATED BRONZE PRESSURE BALANCING SHOWER VALVE WITH ADJUSTABLE TEMPERATURE STOP SCREW, LEVER HANDLE, DIVERTER, HAND HELD SHOWER WITH 30" SLIDE BAR AND QUICK DISCONNECT ON METAL HOSE, INTEGRAL SERVICE STOPS.	2"	2"	1/2"	1/2"	INSTALL VALVE AT 42" AFF.

PLUMBING EQUIPMENT SCHEDULE

MARK	DESCRIPTION	MANUF. & MODEL	ACCESSORIES	REMARKS
TP-1	TRAP PRIMER VALVE	PRECISION PLUMBING PRODUCTS PR-500	FURNISH WITH ISOLATION VALVE AND 12" x 12" ACCESS DOOR WITH SCREW DRIVER LATCH.	INSTALL ADJACENT TO FIXTURE AS SHOWN. SMALLER ACCESS DOORS ARE ACCEPTABLE AS LONG AS FULL ACCESS IS GIVEN TO ISOLATION VALVE AND TRAP PRIMER VALVE AFTER INSTALLATION.
WOB	WASHING MACHINE OUTLET BOX	OATEY QUADTRO 38540	OUTLET BOX WITH SNAP-ON FACEPLATE, SUPPORT BRACKETS, 1/4 TURN BRASS HAMMER BALL VALVE, COPPER SWEAT, UNIT SHALL BE PROVIDED WITH A 2"x3" OUTLET INCREASER.	INSTALL AT 42" AFF BEHIND WASHING MACHINE LOCATION UNLESS NOTED OTHERWISE ON PLANS.
CMO	COFFEE MAKER OUTLET BOX	OATEY SERIES 38	RECESSED PLASTIC BOX, SNAP ON FACEPLATE, 1/4 TURN BALL VALVE, 1/2" COPPER SWEAT CONNECTIO.	VERIFY MOUNTING HEIGHT WITH OWNER.

PLUMBING DRAIN SCHEDULE

MARK	DESCRIPTION	MANUF. & MODEL	SPECIFICATIONS	REMARKS
FD-1	FLOOR DRAIN	ZURN Z415B	DURO-COATED CAST IRON BODY, 2" DIAMETER BOTTOM OUTLET, 2" P-TRAP, 6" DIAMETER ADJUSTABLE POLISHED NICKEL BRONZE STRAINER, 1/2" TRAP PRIMER TAP.	INSTALL WITH TOP OF STRAINER FLUSH WITH FINISH FLOOR. VERIFY FLOOR FINISH WITH ARCHITECTURAL PLANS.
FD-2	SHOWER DRAIN	ZURN ZS880	36" WIDE PRE-FABRICATED STAINLESS STEEL SHOWER TRENCH DRAIN WITH 2" NO HUB CENTER OUTLET. COORDINATE DEPTH AND INSTALLATION WITH STRUCTURAL SLAB.	INSTALL WITH TOP OF STRAINER FLUSH WITH FINISH FLOOR. VERIFY FLOOR FINISH WITH ARCHITECTURAL PLANS.

Renovations to
Jonesboro Recreational Center
Jonesboro Arkansas
Phase II

BRACKETT KRENNERICH architects
100 East Huntington Ave. Suite D P.O. Box 1655
870-932-0571 Fax 870-932-0975
www.bkarchts.com

Revision Schedule

Tag	Rev. Description	Rev. Date	Issued by

CERTIFICATE OF AUTHORIZATION GARVER LLC No. 766 ARKANSAS ENGINEERING

STATE OF ARKANSAS LICENSED PROFESSIONAL ENGINEER No. 19630 N. C. BRACK

Commission Number 2127

P601

Date: February 25 2022

PLUMBING SCHEDULES

C:\Users\bceslick\Documents\Jonesboro Rec Center R20_bceslickTPZNZ.rvt
3/2/2022 10:00:18 AM

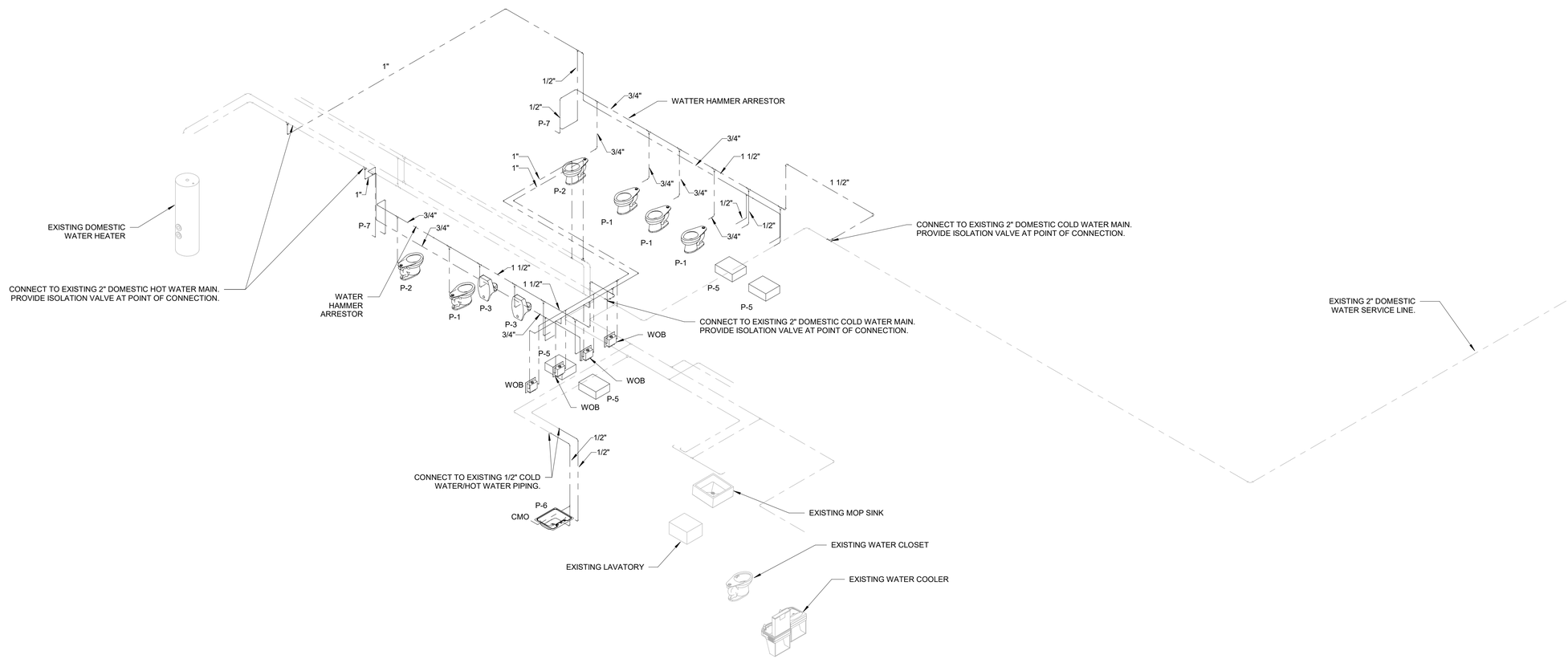

1 **DOMESTIC WATER RISER DIAGRAM**
SCALE:

C:\Users\bceslick\Documents\Jonesboro Rec Center R20_bceslickFPZNZ.rvt
3/2/2022 10:00:19 AM

Renovations to
Jonesboro Recreational Center
Jonesboro Arkansas
Phase II

BRACKETT KRENNERICH architects
100 East Huntington Ave. Suite D P.O. Box 1655 870-932-0571 Fax 870-932-0975 www.bkarchts.com

Revision Schedule			
Tag	Rev. Description	Rev. Date	Issued by

GARVER LLC
CERTIFICATE OF AUTHORIZATION
No. 766
ARKANSAS ENGINEERS

STATE OF ARKANSAS
LICENSED PROFESSIONAL ENGINEER
No. 19630
BRIAN C. ESLICK

Commission Number
2127

P602

Date: February 25 2022

PLUMBING RISERS

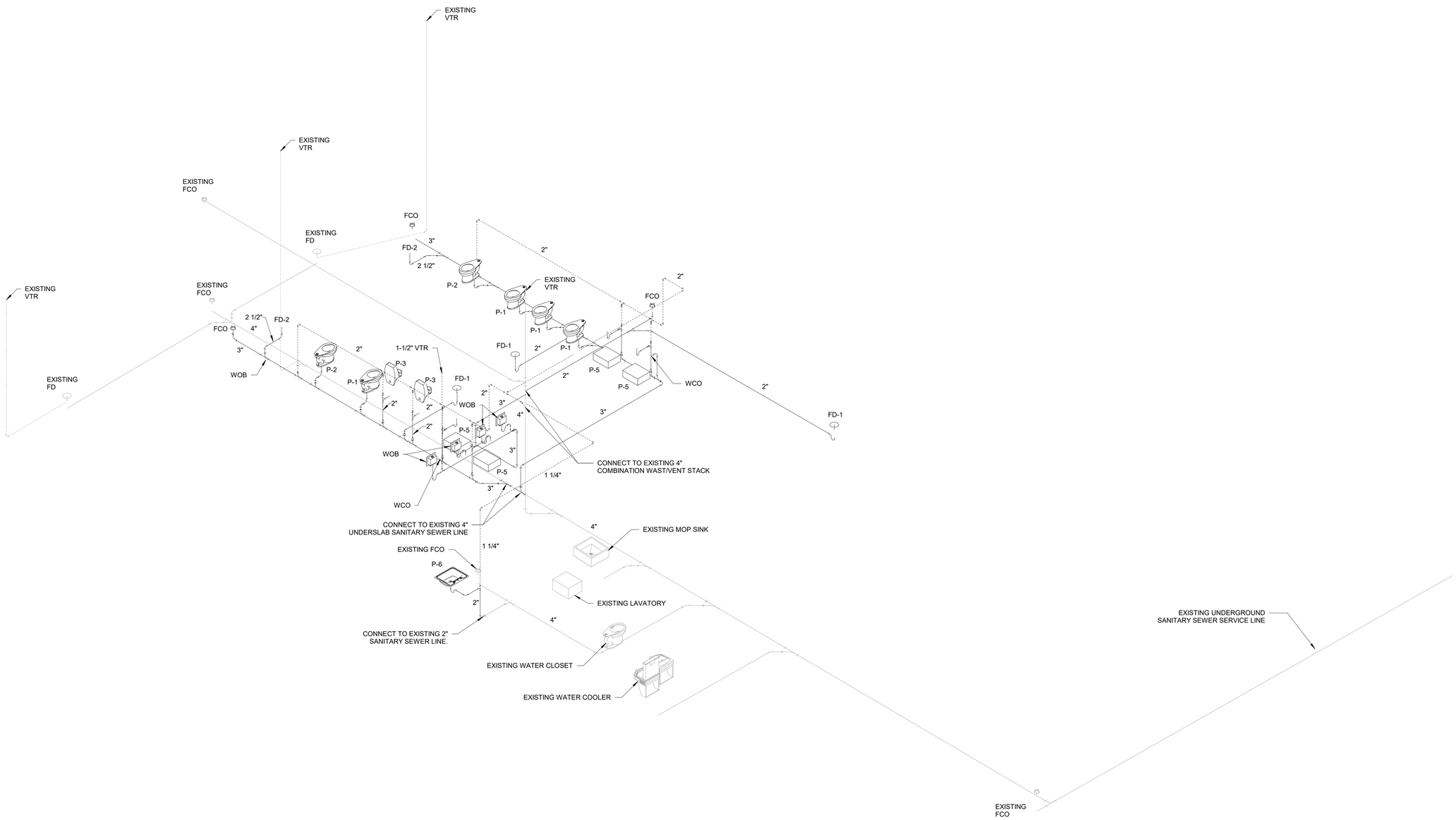

1 **SANITARY SEWER RISER DIAGRAM**
SCALE:

C:\Users\bceslick\Documents\Jonesboro Rec Center R20_bceslickTPZNZ.rvt
3/2/2022 10:00:21 AM

Renovations to
Jonesboro Recreational Center
Jonesboro Arkansas
Phase II

BRACKETT KRENNERICH
architects
100 East Huntington Ave. Suite D P.O. Box 1655 870-932-0571 Fax 870-932-0975 www.bkarchts.com

Revision Schedule			
Tag	Rev. Description	Rev. Date	Issued by

CERTIFICATE OF AUTHORIZATION GARVER LLC No. 766 ARKANSAS ENGINEERING

STATE OF ARKANSAS LICENSED PROFESSIONAL ENGINEER No. 19630 BRIAN C. ESKEW

Commission Number 2127
P603
Date: February 25 2022

PLUMBING RISERS

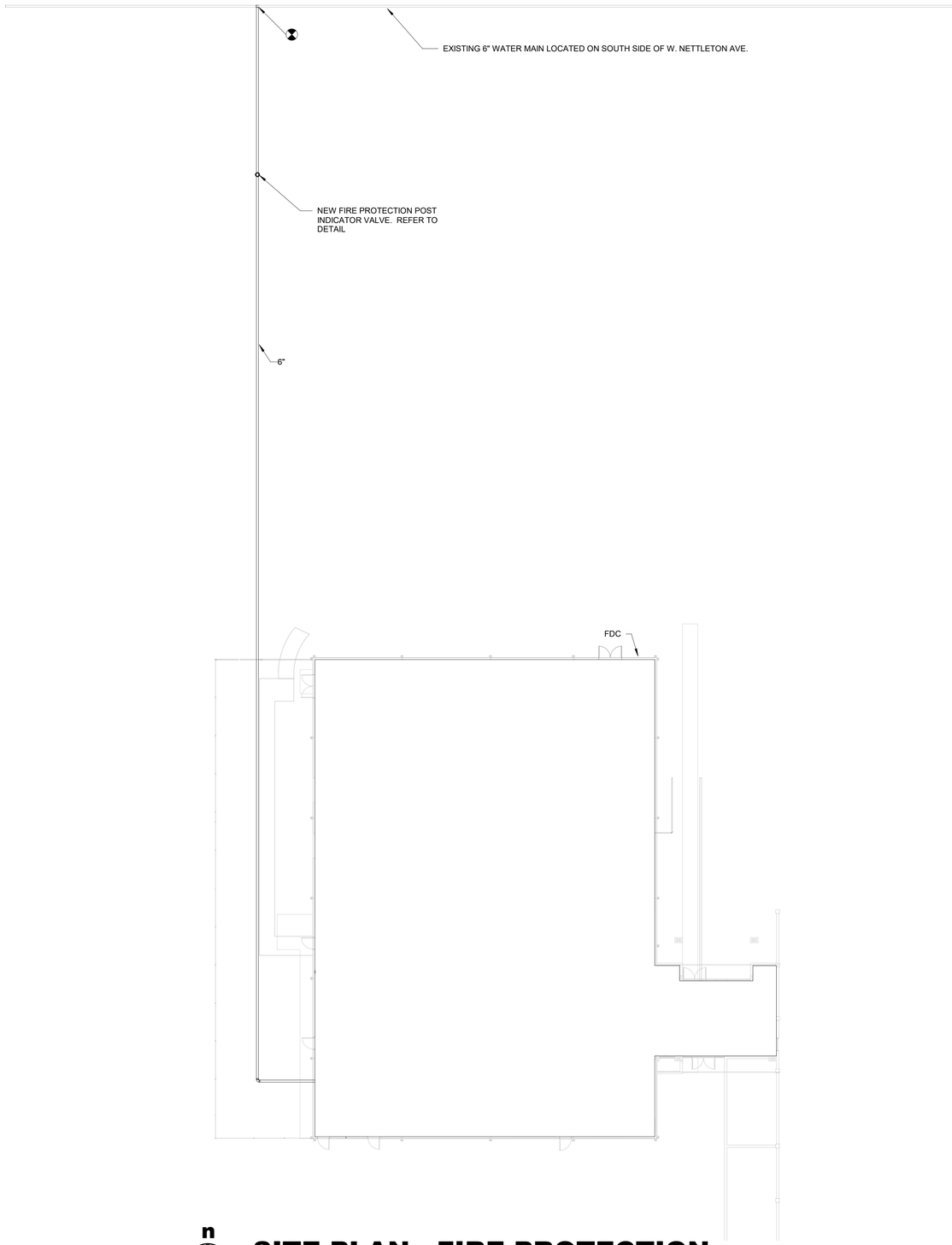

n

SITE PLAN - FIRE PROTECTION

SCALE: 1/16" = 1'-0"

C:\Users\bceslick\Documents\Jonesboro Rec Center R20_bceslickTPZNZ.rvt
3/2/2022 9:28:30 AM

Renovations to
Jonesboro Recreational Center
Jonesboro Arkansas
Phase II

BRACKETT KRENNERICH
architects
100 East Huntington Ave. Suite D P.O. Box 1655
870-932-0571 Fax 870-932-0975
www.bkarchts.com

Revision Schedule			
Tag	Rev. Description	Rev. Date	Issued by

CERTIFICATE OF AUTHORIZATION
GARVER LLC
No. 766
ARKANSAS ENGINEERING

STATE OF ARKANSAS
LICENSED PROFESSIONAL ENGINEER
No. 19630
B. M. C. ROSACK

Commission Number
2127

F100

Date: February 25 2022

FIRE PROTECTION SITE PLAN

FIRE SUPPRESSION HAZARD CLASSIFICATIONS

GENERAL NOTES:
1. PROVIDE A WET-PIPE SPRINKLER SYSTEM IN THE AREAS INDICATED IN ACCORDANCE WITH NFPA 13 (2022) AND THE CITY OF JONESBORO.
2. ALL SPRINKLER HEADS SHALL BE LOCATED IN THE CENTER OF CEILING TILES.
3. SPRINKLER PIPING IN ELECTRICAL AREAS SHALL BE AVOIDED. SIDEWALL HEADS WITH GUARDS SHOULD BE USED.
4. ALL SPRINKLER HEADS IN GYMNASIUM AREAS SHALL BE INSTALLED WITH METAL GUARD.

LIGHT HAZARD - CEILINGS UP TO 30'-0"
DESIGN DENSITY: 0.10 GPM/S.F
DESIGN AREA: 1,500 S.F.
HYDRANT FLOW: 100 GPM
SPRINKLER K-FACTOR = 5.6

QUALIFICATION OF LIGHT HAZARD OCCUPANCY CLASSIFICATION:
AN OCCUPANCY WHERE THE QUANTITY AND/OR THE COMBUSTIBILITY OF CONTENTS IS LOW & FIRE WITH RELATIVELY LOW RATES OF HEAT RELEASE ARE EXPECTED. SMALL, SCATTERED AMOUNTS OF FLAMMABLE LIQUIDS IN CLOSED CONTAINERS NOT EXCEEDING 5 GALLONS PER FIRE AREA ARE EXPECTED.

ORDINARY HAZARD - CEILINGS UP TO 30'-0"
DESIGN DENSITY: 0.15 GPM/S.F
DESIGN AREA: 1,500 S.F.
HYDRANT FLOW: 250 GPM
SPRINKLER K-FACTOR = 5.6

QUALIFICATION OF ORDINARY HAZARD:
AN OCCUPANCY WHERE COMBUSTIBILITY IS LOW, THE QUANTITY OF COMBUSTIBLES IS MODERATE, STOCKPILES OF COMBUSTIBLES DO NOT EXCEED 8 FEET, AND FIRES WITH MODERATE RATES OF HEAT RELEASE ARE EXPECTED; MODEST, SCATTERED AMOUNTS OF FLAMMABLE LIQUIDS IN CLOSED CONTAINERS NOT EXCEEDING 20 GALLONS PER FIRE AREA ARE EXPECTED.

THE DESIGN AREAS NOTED ABOVE, AS APPLICABLE, MUST BE INCREASED BY 30 PERCENT FOR SLOPED CEILING THAT EXCEED A SLOPE OF 2 IN 12.

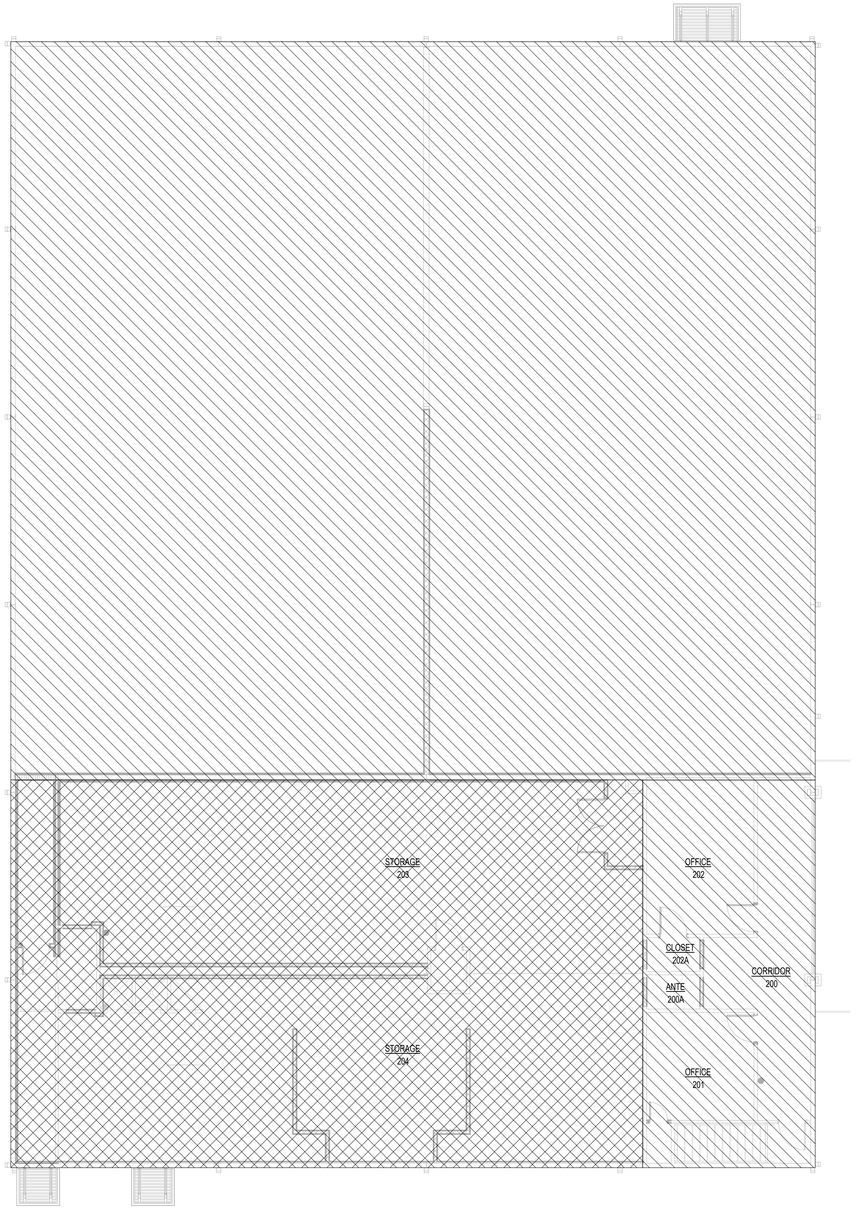

SECOND FLOOR FIRE PROTECTION PLAN - NEW

SCALE: 1/8" = 1'-0"

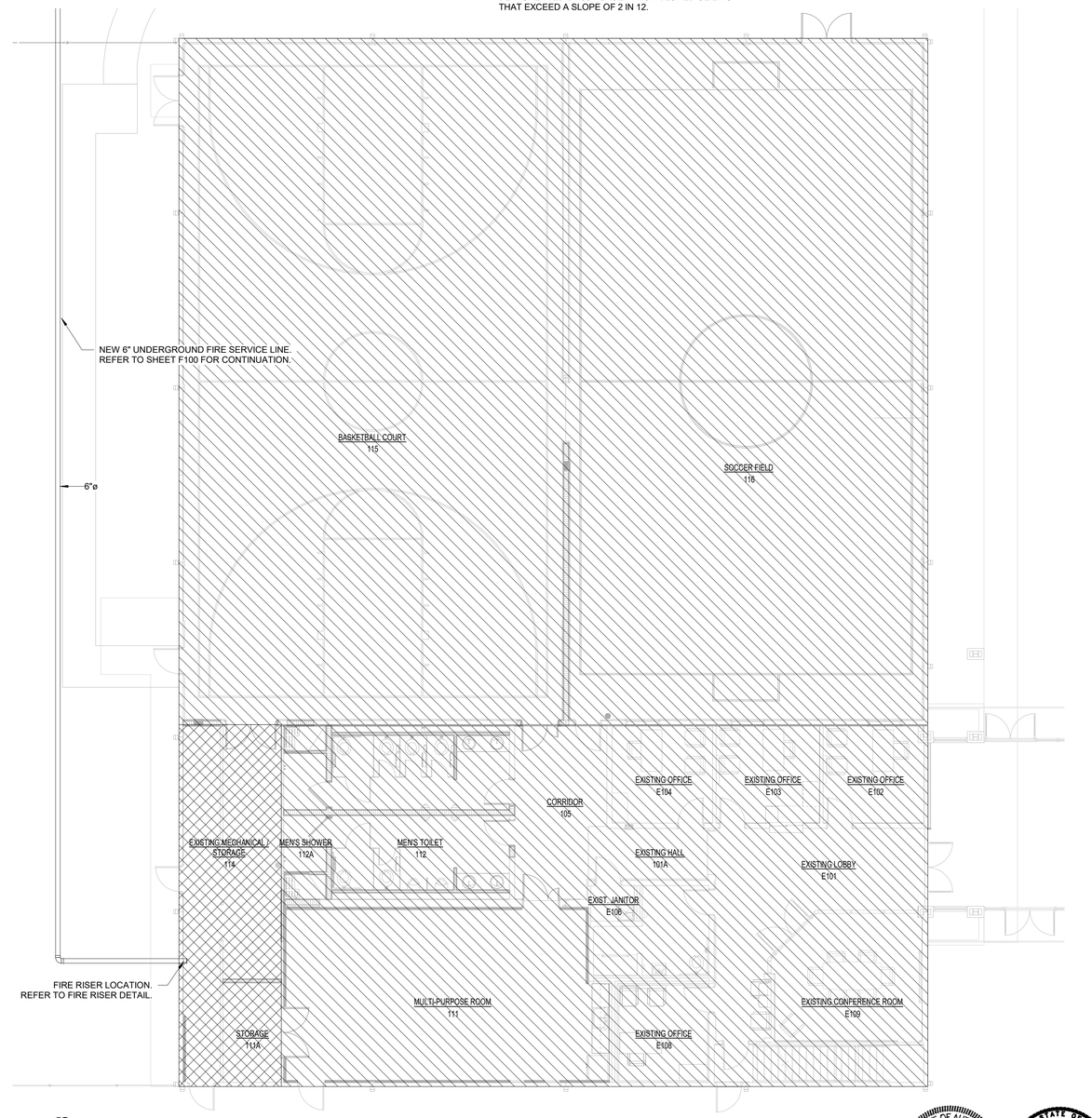

FIRST FLOOR FIRE PROTECTION PLAN - NEW

SCALE: 1/8" = 1'-0"

CERTIFICATE OF AUTHORIZATION
GARVER LLC
No. 766
ARKANSAS ENGINEERING

STATE OF ARKANSAS
LICENSED PROFESSIONAL ENGINEER
No. 19630
BRYAN G. BAILEY

Commission Number
2127

F101

Date: February 25 2022

Renovations to
Jonesboro Recreational Center
Jonesboro Arkansas
Phase II

BRACKETT KRENNERICH architects
100 East Huntington Ave. Suite D P.O. Box 1655
870-932-0571 Fax 870-932-0975
www.bkarchts.com

Revision Schedule				
Tag	Rev. Description	Rev. Date	Issued by	

FIRE PROTECTION PLAN

C:\Users\bceslick\Documents\Jonesboro Rec Center R20_bceslickTPZNZ.rvt
3/2/2022 9:28:32 AM

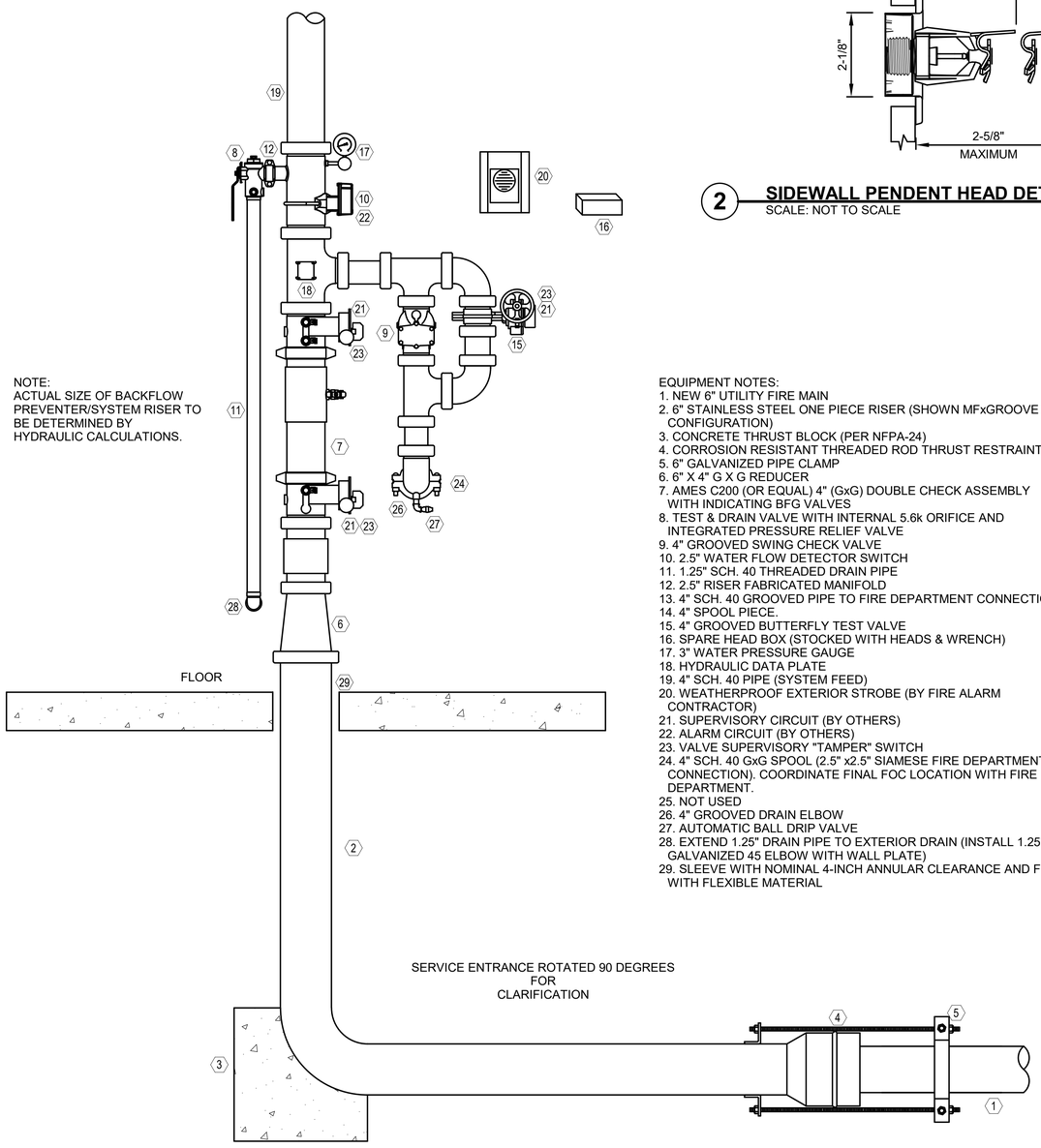

1 FIRE SUPPRESSION RISER DETAIL
SCALE: NOT TO SCALE

EQUIPMENT NOTES:
1. NEW 6" UTILITY FIRE MAIN
2. 6" STAINLESS STEEL ONE PIECE RISER (SHOWN MFxGROOVE CONFIGURATION)
3. CONCRETE THRUST BLOCK (PER NFPA-24)
4. CORROSION RESISTANT THREADED ROD THRUST RESTRAINT
5. 6" GALVANIZED PIPE CLAMP
6. 6" X 4" G X G REDUCER
7. AMES C200 (OR EQUAL) 4" (GxG) DOUBLE CHECK ASSEMBLY WITH INDICATING BFG VALVES
8. TEST & DRAIN VALVE WITH INTERNAL 5.6k ORIFICE AND INTEGRATED PRESSURE RELIEF VALVE
9. 4" GROOVED SWING CHECK VALVE
10. 2.5" WATER FLOW DETECTOR SWITCH
11. 1.25" SCH. 40 THREADED DRAIN PIPE
12. 2.5" RISER FABRICATED MANIFOLD
13. 4" SCH. 40 GROOVED PIPE TO FIRE DEPARTMENT CONNECTION
14. 4" SPOOL PIECE.
15. 4" GROOVED BUTTERFLY TEST VALVE
16. SPARE HEAD BOX (STOCKED WITH HEADS & WRENCH)
17. 3" WATER PRESSURE GAUGE
18. HYDRAULIC DATA PLATE
19. 4" SCH. 40 PIPE (SYSTEM FEED)
20. WEATHERPROOF EXTERIOR STROBE (BY FIRE ALARM CONTRACTOR)
21. SUPERVISORY CIRCUIT (BY OTHERS)
22. ALARM CIRCUIT (BY OTHERS)
23. VALVE SUPERVISORY "TAMPER" SWITCH
24. 4" SCH. 40 GxG SPOOL (2.5" x2.5" SIAMESE FIRE DEPARTMENT CONNECTION). COORDINATE FINAL FOC LOCATION WITH FIRE DEPARTMENT.
25. NOT USED
26. 4" GROOVED DRAIN ELBOW
27. AUTOMATIC BALL DRIP VALVE
28. EXTEND 1.25" DRAIN PIPE TO EXTERIOR DRAIN (INSTALL 1.25" GALVANIZED 45 ELBOW WITH WALL PLATE)
29. SLEEVE WITH NOMINAL 4-INCH ANNULAR CLEARANCE AND FILL WITH FLEXIBLE MATERIAL

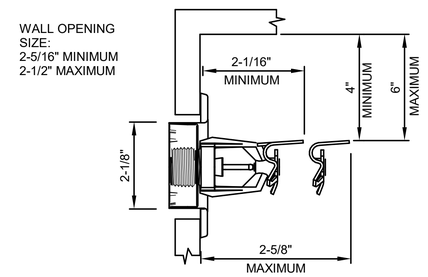

2 SIDEWALL PENDENT HEAD DETAIL
SCALE: NOT TO SCALE

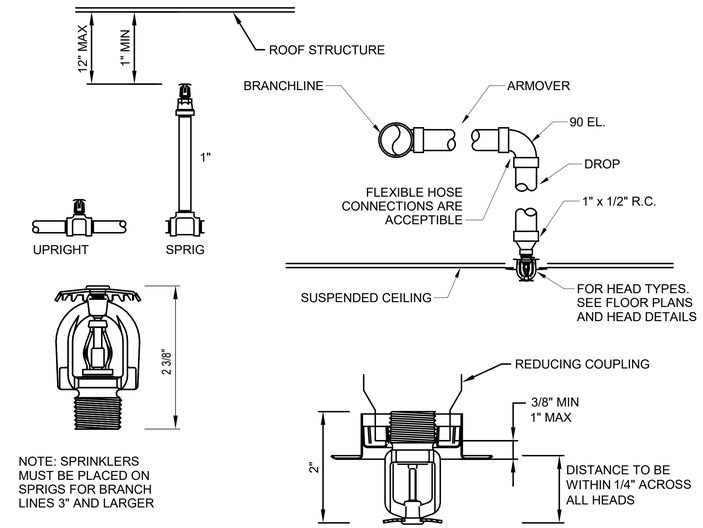

3 TYPICAL SPRINKLER DETAILS
SCALE: NOT TO SCALE

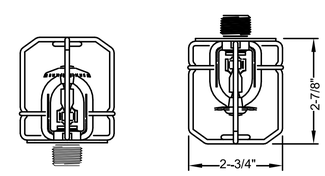

4 SPRINKLER GUARD DETAIL
SCALE: NOT TO SCALE

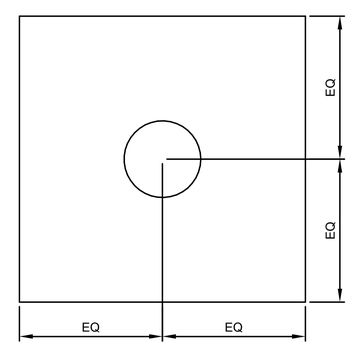

5 CEILING TILE INSTALLATION
SCALE: NOT TO SCALE

Renovations to
JonesboroRecreational Center
Jonesboro Arkansas

BRACKETT KRENNERICH architects
100 East Huntington Ave. Suite D P.O. Box 1655 870-932-0571 Fax 870-932-0975 www.bkarchts.com

Revision Schedule			
Tag	Rev. Description	Rev. Date	issued by

CERTIFICATE OF AUTHORIZATION GARVER LLC No. 766 ARKANSAS ENGINEERING

STATE OF ARKANSAS LICENSED PROFESSIONAL ENGINEER No. 19630 BRIAN C. ASHCRAFT

Commission Number 2127
F501
Date: February 25 2022

FIRE SUPPRESSION DETAILS

C:\Users\bceslick\Documents\Jonesboro Rec Center R20_bceslickTPZNZ.rvt
3/2/2022 9:28:34 AM

FIELD ADJUSTMENT INSTRUCTIONS

1. REMOVE THE BODY FROM THE TOP OF THE INDICATOR POST ASSEMBLY.
2. CUT THE REQUIRED LENGTH OFF THE BOTTOM OF THE STANDPIPE FOR THE GROUND LINE TO MATCH UP WITH STANDPIPE GROUND LINE MARK.
3. CUT THE 1" SQ. EXTENSION AT A DISTANCE OF 9" ABOVE THE TOP OF THE STANDPIPE.
4. SET THE "OPEN" AND "SHUT" TARGETS FOR THE APPROPRIATE VALVE SIZE.
5. RE-ATTACH THE BODY TO THE TOP OF THE INDICATOR POST ASSEMBLY.
6. ALL POST INDICATOR VALVES SHALL BE INSTALLED WITH AN ELECTRONIC UL LISTED TAMPER SWITCH.
7. THERE SHALL BE 36" OF UNOBSTRUCTED CLEARANCE AROUND THE PERIMETER OF ALL POST INDICATOR VALVES.
8. POST INDICATOR VALVE SHALL BE LOCATED AT A MINIMUM 5-ft FROM BUILDING.

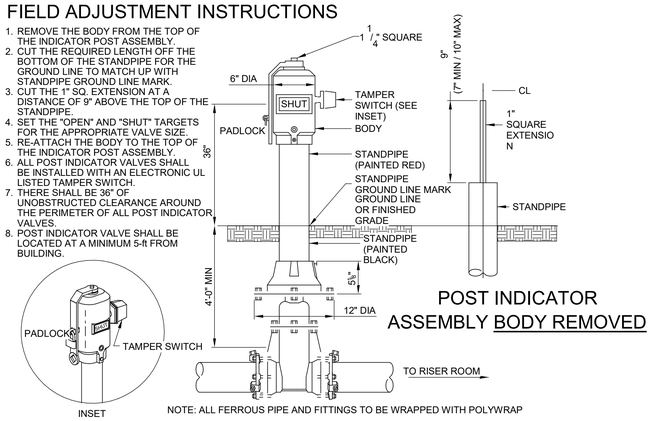

POST INDICATOR ASSEMBLY BODY REMOVED

NOTE: ALL FERROUS PIPE AND FITTINGS TO BE WRAPPED WITH POLYWRAP

1 PIV DETAIL
SCALE: NOT SCALE

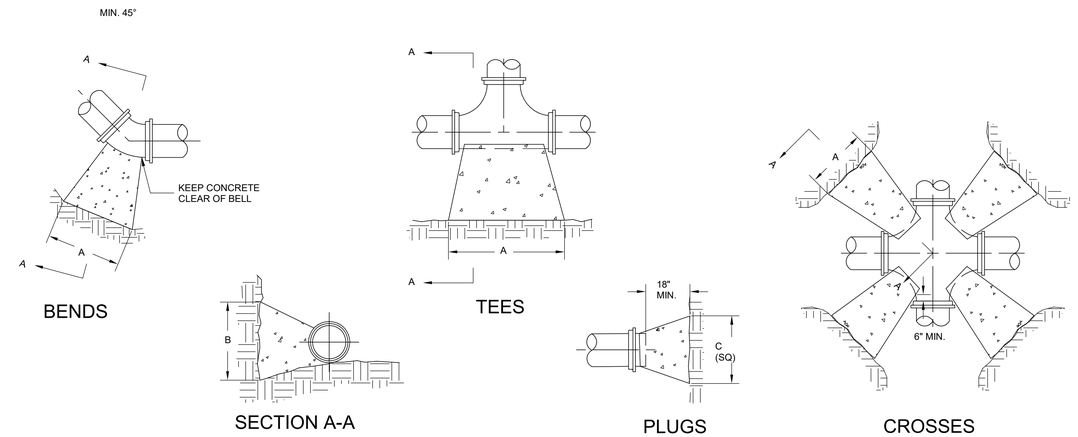

REQUIRED BEARING AREA ON UNDISTURBED SOIL AND TYPICALDIMENSIONS															
SIZE	CROSSES / 90° BENDS			45° BENDS			11-1/4" BENDS			22-1/2" BENDS			TEES & PLUGS		
	AREA SQ. FT	"A"	"B"	AREA SQ. FT	"A"	"B"	AREA SQ. FT	"A"	"B"	AREA SQ. FT	"A"	"B"	AREA SQ. FT	"A"	"B"
6"	4.0	32"	18"	2.2	18"	16"	0.6	5"	18"	1.1	9"	18"	2.8	23"	18"
8"	7.0	42"	24"	3.6	23"	24"	1.0	6"	24"	2.0	12"	24"	5.0	30"	24"
10"	11.0	53"	30"	6.3	30"	30"	1.6	8"	30"	3.1	15"	30"	8.0	38"	30"
12"	16.1	64"	36"	10.0	40"	36"	2.2	9"	36"	4.4	18"	36"	11.3	45"	36"
14"	21.6	74"	42"	12.5	43"	42"	3.0	10"	42"	6.0	21"	42"	15.5	53"	42"
16"	28.3	85"	48"	17.7	53"	48"	4.0	12"	48"	7.7	23"	48"	20.1	60"	48"

* SURFACE AREA OF BEARING SOIL IS PROVIDED FOR 200 PSI MAXIMUM PRESSURE (INCLUDING SURGE) AND 200 PSF SOIL BEARING. IF PRESSURE IS HIGHER OR SOIL BEARING IS POTENTIALLY LOWER. CONSULT THE ENGINEER FOR ADJUSTMENTS.

NOTES:

1. COVER OVER TOP OF PIPE SHALL BE BELOW THE FROST LINE OR 30" MINIMUM, 72" MAXIMUM ACCORDING TO REGULATORY REQUIREMENTS. IF GRADING PLANS RECEIVED BY THE ENGINEER/OWNER WITH THE REQUEST FOR WATER MAIN LAYOUT INDICATE ADJUSTMENTS TO EXISTING GRADE, THEN PIPE SHALL BE INSTALLED TO MEET MINIMUM AND MAXIMUM COVER FROM PROPOSED GRADES SHOWN ON THE SAID PLANS.
2. THRUST BLOCKS SHALL BE BUILT AGAINST UNDISTURBED SOIL WITH ADEQUATE BACKING TO PREVENT MOVEMENT OF FITTING.
3. NO THRUST BLOCKS TO BE PLACED IN SEWER LATERAL DITCHES.
4. THRUST BLOCKING MUST FIT WITHIN THE EASEMENT.
5. IN SOME CASES, ADDITIONAL RESTRAINT MAY BE REQUIRED BASED ON 150 PSI STATIC PRESSURE, PLUS 50 PSI WATER HAMMER AND 2000 PSF SOIL BEARING.
6. POLYETHYLENE ENCASEMENT IS REQUIRED ON ALL D.I. PIPE AND FITTINGS.
7. THRUST BLOCKING SHALL BE PERFORMED SUCH THAT PIPE JOINTS AND BOLTS ARE ACCESSIBLE.
8. SUFFICIENT CLEARANCE SHALL BE ALLOWED BETWEEN CONCRETE AND BOLTS FOR FUTURE MAINTENANCE.
9. ALL ANCHOR BOLTS SHALL BE STAINLESS STEEL, MINIMUM $^{3}/_{4}$" DIAMETER.
10. ALL M.J. AND FLG. FITTINGS TO RECEIVE THRUST BLOCKS SHALL BE WRAPPED IN POLYWRAP. CONTRACTOR SHALL ENSURE THAT POLYWRAP EXTENDS FAR ENOUGH BEYOND THE FITTING TO ENCLOSE ALL BOLTS WITHIN THE POLYWRAP.
11. THRUST BLOCKING DETAILS ARE SHOWN HERE FOR TYPICAL INSTALLATIONS. IN SOME CASES, ADDITIONAL RESTRAINT MAY BE REQUIRED.
12. PORTLAND CEMENT CONCRETE USED FOR THRUST BLOCKS SHALL BE MIN 3000 PSI CONCRETE.
13. FOR UNSTABLE SOIL CONDITIONS, CHECK WITH ENGINEER FOR THRUST BLOCK DIMENSIONS.
14. FOR MAIN SIZES GREATER THAN 16", SEE ENGINEER FOR THRUST BLOCK DIMENSIONS.

2 THRUST BLOCK DETAIL
SCALE: NOT TO SCALE

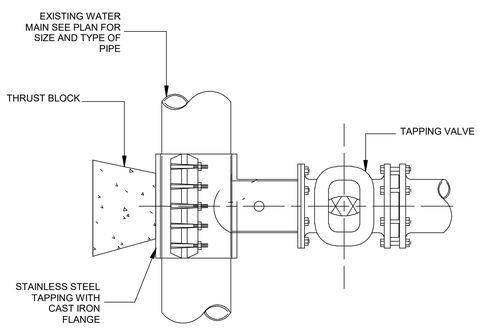

PLAN

NOTES:

1. AMERICAN WATER PERMITS SIZE ON SIZE TAPPING OF WATER MAIN CONNECTIONS FOR UP TO 12" DIAMETER MAINS. TAPPING SLEEVES SHALL BE CAST IRON IN THESE APPLICATIONS.
2. SIZE ON SIZE TAPS ARE NOT PERMITTED ON MAINS LARGER THAN 12" IN DIAMETER. CUT-IN TEES SHALL BE REQUIRED.

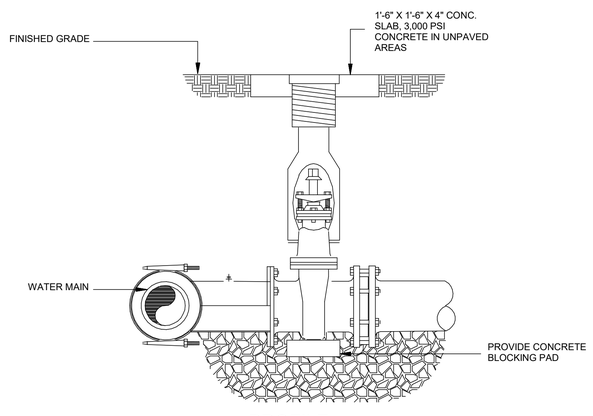

PROFILE

3 CONNECTION TO EXISTING WATER LINE DETAIL
SCALE: NOT TO SCALE

C:\Users\bceslick\Documents\Jonesboro Rec Center R20_bceslickFZNZ.rvt
3/2/2022 9:28:38 AM

Renovations to
Jonesboro Recreational Center
Jonesboro Arkansas
Phase II

BRACKETT KRENNERICH architects
100 East Huntington Ave. Suite D P.O. Box 1655 870-932-0571 Fax 870-932-0975 www.bkarchts.com

Revision Schedule			
Tag	Rev. Description	Rev. Date	Issued by

CERTIFICATE OF AUTHORIZATION GARVER LLC No. 766 ARKANSAS ENGINEERING

STATE OF ARKANSAS LICENSED PROFESSIONAL ENGINEER No. 19630 BRIAN C. KNIGHT

Commission Number 2127

F502

Date: February 25 2022

FIRE SUPPRESSION DETAILS

ELECTRICAL GENERAL NOTES

1. CIRCUITS OF DIFFERENT PHASES MAY SHARE THE SAME EQUIPMENT GROUND. THE EQUIPMENT GROUNDING CONDUCTOR SIZE SHALL NOT BE LESS THAN #12 AWG OR AS INDICATED ON THE DRAWINGS.
2. ALL CONDUCTORS SHALL BE COPPER THHN/THWN. ALL CONDUCTORS #10 AWG AND SMALLER SHALL BE SOLID COPPER. ALL CONDUCTORS #8 AWG AND LARGER SHALL BE STRANDED COPPER USING BOLTED LUGS AT TERMINALS.
3. ALL POWER CONDUCTORS SHALL BE ROUTED IN CONDUIT. CONDUITS SHALL BE CONCEALED UNLESS INDICATED OTHERWISE.
4. THE MINIMUM CONDUIT SIZE SHALL BE 3/4" INSIDE OF THE BUILDING. THE MINIMUM BELOW GRADE CONDUIT SHALL BE 1".
5. EMT CONDUIT SHALL BE USED INDOORS IN CONCEALED LOCATION. IMC CONDUIT SHALL BE USED IN ELECTRICAL AND MECHANICAL ROOMS. GRS CONDUIT SHALL BE USED ABOVE GRADE IN OUTDOOR LOCATIONS. SCH 80 PVC CONDUIT SHALL BE USED BELOW GRADE. NO CONDUITS SHALL BE LOCATED BELOW BUILDING SLAB.
6. MINIMUM WIRE SIZE SHALL BE #12 AWG UNLESS OTHERWISE NOTED.
7. THE CONTRACTOR SHALL ADJUST CONDUCTOR SIZE BASED ON VOLTAGE DROP CALCULATIONS FOR ALL ELECTRICAL CIRCUITS IN EXCESS OF 100' OF LENGTH.
8. ALL WORK SHALL COMPLY WITH THE LATEST EDITION OF THE NATIONAL ELECTRIC CODE.
9. ALL ELECTRICAL EQUIPMENT (CONDUIT, BOXES, SUPPORTS, ETC.) INSTALLED IN EXPOSED CEILING AREAS SHALL BE PAINTED AS DIRECTED BY THE ARCHITECT.
10. ELECTRICAL CONTRACTOR SHALL CLOSELY COORDINATE WITH MECHANICAL AND PLUMBING CONTRACTORS FOR EXACT LOCATION OF HVAC AND PLUMBING EQUIPMENT.
11. COMPRESSION FITTINGS SHALL BE USED ON ALL EMT CONDUIT. SET SCREW FITTINGS ARE NOT ALLOWED.
12. ALL CIRCUITS SHALL BE LABEL ON PANEL SCHEDULES. PANEL SCHEDULES SHALL BE TYPED. HAND WRITTEN PANEL SCHEDULES ARE NOT ACCEPTABLE.
13. FLEXIBLE CONNECTIONS AT EQUIPMENT AND TRANSFORMERS SHALL BE 6'-0" MAX. CONNECTIONS SHALL BE WEATHERTIGHT FLEXIBLE CONDUIT IN ALL LOCATIONS.
14. ANY PENETRATIONS MADE THROUGH FIRE RATED PARTITIONS SHALL BE FIRE STOPPED WITH APPROVED U.L. LISTED SYSTEM.
15. ALL DEVICES SHALL BE RATED 20A MINIMUM. 15A DEVICES ARE NOT ACCEPTABLE.
16. PROVIDE PULL STRING AND PROTECTIVE BUSHING IN ALL SPARE CONDUITS.
17. SCREW-IN TYPE FLEXIBLE CONDUIT FITTINGS SHALL NOT BE USED. FLEXIBLE CONDUIT FITTINGS SHALL BE SQUEEZE TYPE CONNECTORS WITH SINGLE SCREW CLAMP.
18. SNAP-IN TYPE MC CABLE FITTINGS SHALL NOT BE USED. TYPE MC CABLE FITTINGS SHALL BE CLAMP TYPE CONNECTORS WITH LOCKRING AT JUNCTION BOXES.
19. ALL APPLICABLE PERMITS AND APPROVALS FROM THE AUTHORITY HAVING JURISDICTION AND THE ENGINEER OF RECORD SHALL BE OBTAINED PRIOR TO COMMENCING WORK.
20. DUCT MOUNTED SMOKE DETECTORS SHALL BE PROVIDED IN SUPPLY AND RETURN AIR PATH OF ALL HVAC EQUIPMENT RATED AT 2,000 CFM OR MORE. DETECTORS SHALL INITIATE A SHUTDOWN OF THE HVAC UNIT WHEN ACTIVATED.
21. DRAWINGS ARE DIAGRAMMATIC IN THAT EXACT DEVICE LOCATIONS, CONDUIT ROUTING, CONDUIT SUPPORTS, AND CONSTRUCTION DETAILS ARE TO BE DEVELOPED BY THE CONTRACTOR. THE CONTRACTOR SHALL COORDINATE THE EXACT LOCATION OF DETECTORS WITH HVAC DIFFUSERS AND CEILING MOUNTED LIGHTING FIXTURES.

LIGHTING, POWER, AND SYSTEM LEGEND

SIMPLEX RECEPTACLE

DUPLEX RECEPTACLE AT 18" A.F.F.
GFI - GROUND FAULT CIRCUIT INTERRUPTER
TP - TAMPER PROOF RECEPTACLE
AC - MOUNTED 1" ABOVE COUNTER, TYPICALLY 44" A.F.F.
WP - PROVIDED WITH WEATHERPROOF IN-USE TYPE COVER
ICE - DEDICATED ICE MAKER RECEPTACLE
EWC - DEDICATED WATER COOLER RECEPTACLE FED FROM GFCI CIRCUIT BREAKER, COORDINATE EXACT MOUNTING WITH COOLER PROVIDED
REF - DEDICATED REFRIGERATOR RECEPTACLE
RANGE - DEDICATED RANGE RECEPTACLE
W - DEDICATED WASHING MACHINE RECEPTACLE
TV - DEDICATED TELEVISION RECEPTACLE, COORDINATE EXACT MOUNTING HEIGHT WITH OWNER, TYPICALLY 72" A.F.F.
DIS - DEDICATED GARBAGE DISPOSER RECEPTACLE BELOW COUNTER, SWITCHED ABOVE COUNTER (SWITCHES NOT SHOWN)
COPY - DEDICATE COPIER RECEPTACLE

QUADRUPLEX RECEPTACLE

CEILING MOUNTED RECEPTACLE

SPECIAL PURPOSE RECEPTACLE, NEMA CONFIGURATION AS INDICATED.

FLOOR DUPLEX RECEPTACLE

FLOOR QUADRUPLEX RECEPTACLE

PANELBOARD

DISCONNECT SWITCH

MOTOR STARTER/DISCONNECT SWITCH

MOTOR STARTER

VFD — VARIABLE FREQUENCY DRIVE

BRANCH CIRCUIT HOMERUN, HOT-NEUTRAL-GROUND, PANEL AND CIRCUIT NUMBER INDICATED ON PLAN

T — DRY-TYPE TRANSFORMER

J J — JUNCTION BOX

$ — SINGLE POLE TOGGLE SWITCH AT 48" A.F.F
2 - INDICATES 2-POLE TOGGLE
3 - INDICATES 3-WAY TOGGLE
4 - INDICATES 4-WAY TOGGLE
D - INDICATES DIMMER
K - INDICATES KEY OPERATED
LV - LOW VOLTAGE, CONFIGURATION INDICATED ON PLAN
M - MOTOR RATED TOGGLE
OC - DUAL TECHNOLOGY OCCUPANCY SENSOR SWITCH
WP - WEATHERPROOF COVER

OC — CEILING MOUNTED DUAL TECHNOLOGY OCCUPANCY SENSOR

DL — DAYLIGHTING SENSOR

PP — OCCUPANCY SENSOR POWER PACK

RC — LIGHTING ROOM CONTROLLER

1'X4' RECESSED LIGHTING FIXTURE

2'X4' RECESSED LIGHTING FIXTURE

2'X2' RECESSED LIGHTING FIXTURE

STRIP LIGHTING FIXTURE

DOWNLIGHT

WALL MOUNTED LINEAR LIGHTING FIXTURE

WALL MOUNTED LIGHTING FIXTURE

CEILING MOUNTED EXIT SIGN, SHADING INDICATES FACES

WALL MOUNTED EXIT SIGN, SHADING INDICATES FACES

WALL MOUNTED EMERGENCY LIGHTING FIXTURE

ABBREVIATIONS

AC	ABOVE COUNTER or ALTERNATING CURRENT
ACP	ACCESS CONTROL PANEL
AFF	ABOVE FINISH FLOOR
AFCI	ARC FAULT CIRCUIT INTERRUPTING
AFG	ABOVE FINISH GRADE
AHU	AIR HANDLING UNIT
AL	ALUMINUM
ATS	AUTOMATIC TRANSFER SWITCH
A/V	REFERS TO AUDIO/VIDEO
AWG	AMERICAN WIRE GAUGE
C	CONDUIT
CCTV	CLOSED CIRCUIT TELEVISION
CKT or CIR	CIRCUIT
CU	COPPER
db	DECIBEL
DC	DIRECT CURRENT
DIA	DIAMETER
EF	EXHAUST FAN
EMT	ELECTRICAL METALLIC TUBING
EP	EXPLOSION PROOF
EPO	EMERGENCY POWER OFF
ERV	ENERGY RECOVERY VENTILATOR
FA	FIRE ALARM
FLA	FULL LOAD AMPS
GFCI	GROUND FAULT CIRCUIT INTERRUPTING
GRD	GROUND
GRS	GALVANIZED RIGID STEEL
IMC	INTERMEDIATE METAL CONDUIT
KCMIL	THOUSAND CIRCULAR MILS
KVA	KILOVOLT AMPS
LTG	LIGHTING
LRA	LOCKED ROTOR AMPS
MC	METAL CLAD CABLE
MCA	MINIMUM CIRCUIT AMPACITY
MCB	MAIN CIRCUIT BREAKER
MTD	MOUNTED
MTS	MANUAL TRANSFER SWITCH
NC	NORMALLY CLOSED
NEC	NATIONAL ELECTRICAL CODE
NEMA	NATIONAL ELECTRICAL MANUFACTURER'S ASSOCIATION
NF	NON-FUSED
NFPA	NATIONAL FIRE PROTECTION ASSOCIATION
NO	NORMALLY OPEN
NS	NON-SWITCHED
P	POLE
PE	PHOTOELECTRIC CELL
PNL	PANELBOARD
PWR	POWER
QTY	QUANTITY
REQ	REQUIRED
RMS	ROOM MEAN SQUARED
RTU	ROOF TOP UNIT
SD	SMOKE DAMPER
SP	SURGE PROTECTION
ST	SHUNT TRIP
SPD	SURGE PROTECTIVE DEVICE
SW	SWITCH
TC	TIME CLOCK
TEL	TELEPHONE
TYP.	TYPICAL
UC	DENOTES UNDER COUNTER - VERIFY LOCATION
UL	UNDERWRITERS LABORATORY
UON	UNLESS OTHERWISE NOTED
V	VOLTAGE
VA	VOLT AMPS
VEP	VOICE EVACUATION PANEL
VFD	VARIABLE FREQUENCY DRIVE
W	WATT OR WIRE
WH	WATER HEATER
WP	WEATHERPROOF
XFMR	TRANSFORMER

CORPORATE REGISTRATION GARVER LLC No. 766 ARKANSAS ENGINEER

STATE OF ARKANSAS REGISTERED PROFESSIONAL ENGINEER NO. 11120 JAMES W. JOYCE 3/2/2022

Commission Number 2127

E100

Date: February 25 2022

Revisions to
Jonesboro Recreational Center
Jonesboro Arkansas
Phase II

BRACKETT KRENNERICH architects

Revision Schedule				
Tag	Rev. Description	Rev. Date	Issued by	

100 East Huntington Ave. Suite D P.O. Box 1655 870-932-0571 Fax 870-932-0975 www.bkarchts.com

GENERAL NOTES AND LEGENDS

C:\Users\JWJoyce\OneDrive - Garver\Documents\Jonesboro Rec Center
CAD Version: ACAD-23s
3/2/2022 9:48:04 AM

ELECTRICAL KEYED NOTES

1. REMOVE EXISTING LIGHTING FIXTURE, BRANCH CIRCUIT, WIRING, AND CONDUIT BACK TO ITS SOURCE.
2. REMOVE EXISTING LIGHTING SWITCH, AND WIRING BACK TO ITS SOURCE. IN WALLS INDICATED TO BE REMOVED, REMOVE JUNCTION BOX AND CONDUIT. IN WALL INDICATED TO REMAIN, PROVIDE A BLANK COVER PLATE.
3. REMOVE ALL EXISTING LIGHTING FIXTURES, SWITCHES, RECEPTACLES, CONDUIT, AND CABLING IN THIS SPACE.

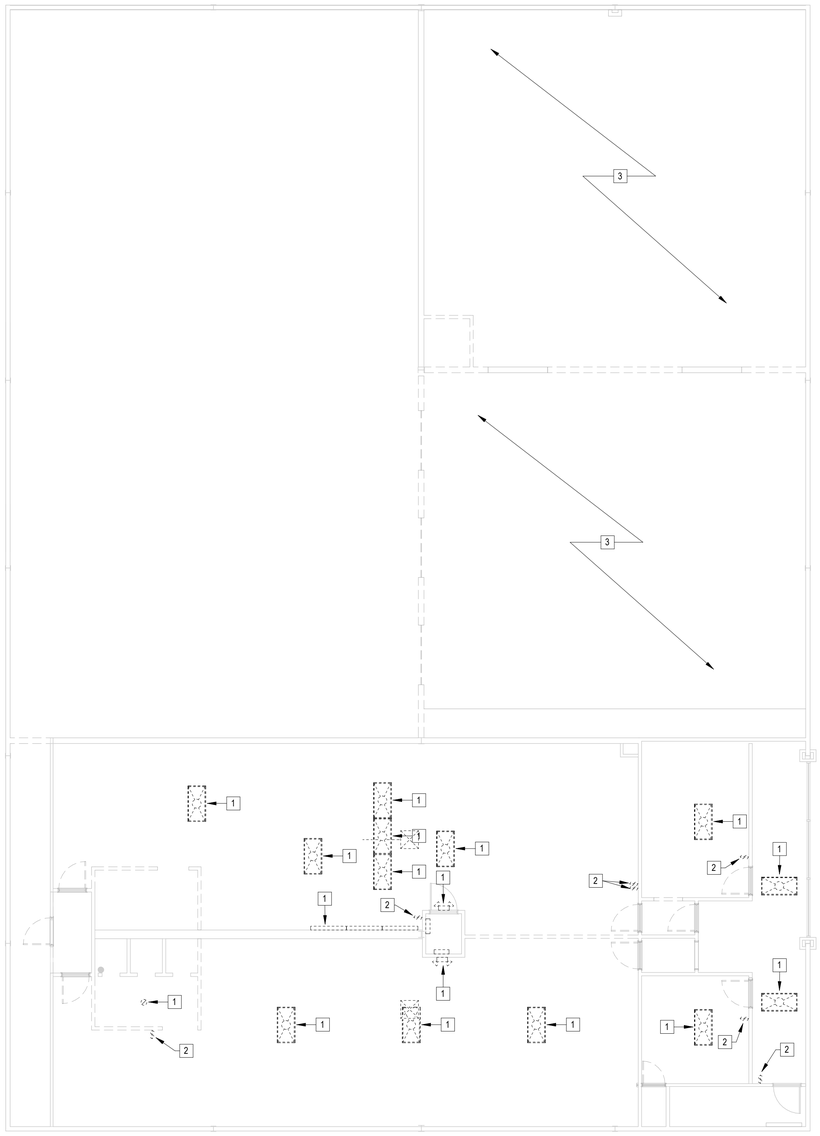

ELECTRICAL RCP - SECOND FLOOR - DEMO

SCALE: 1/8" = 1'-0"

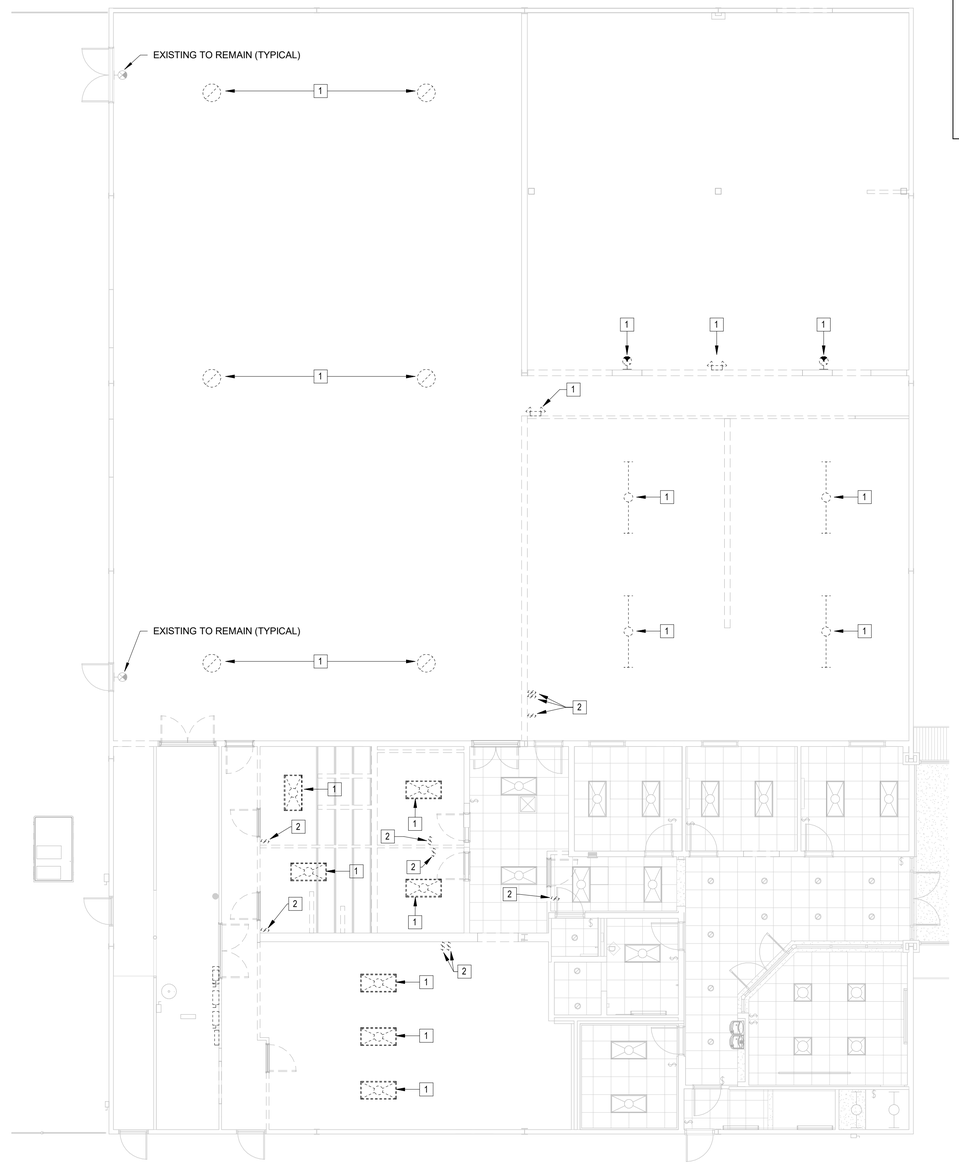

ELECTRICAL RCP - FIRST FLOOR - DEMO

SCALE: 1/8" = 1'-0"

Renovations to Jonesboro Recreational Center

Jonesboro Arkansas Phase II

BRACKETT KRENNERICH architects

100 East Huntington Ave. Suite D P.O. Box 1655 870-932-0571 Fax 870-932-0975 www.bkarchts.com

Revision Schedule			
Tag	Rev. Description	Rev. Date	Issued by

CORPORATE REGISTRATION GARVER LLC No. 766 ARKANSAS ENGINEER

ARKANSAS REGISTERED PROFESSIONAL ENGINEER NO. 11128 3/02/22 JOHN T. GARVER

Commission Number 2127

E101

Date: February 25 2022

ELECTRICAL REFLECTED CEILING PLAN - DEMO

C:\Users\JWilcox\OneDrive - Garver\Documents\Jonesboro Rec Center
Central.rvt
3/2/2022 9:48:06 AM

ELECTRICAL KEYED NOTES

1. REMOVE EXISTING RECEPTACLE, WIRING, AND CONDUIT BACK TO ITS SOURCE.
2. REMOVE EXISTING ELECTRICAL DISCONNECT. REFER TO THE POWER RISER DIAGRAM ON SHEET E602.
3. REMOVE EXISTING ELECTRICAL PANEL. REFER TO THE POWER RISER DIAGRAM ON SHEET E602.
4. REMOVE EXISTING ABANDONED ELECTRICAL PANEL. REFER TO THE POWER RISER DIAGRAM ON SHEET E602.

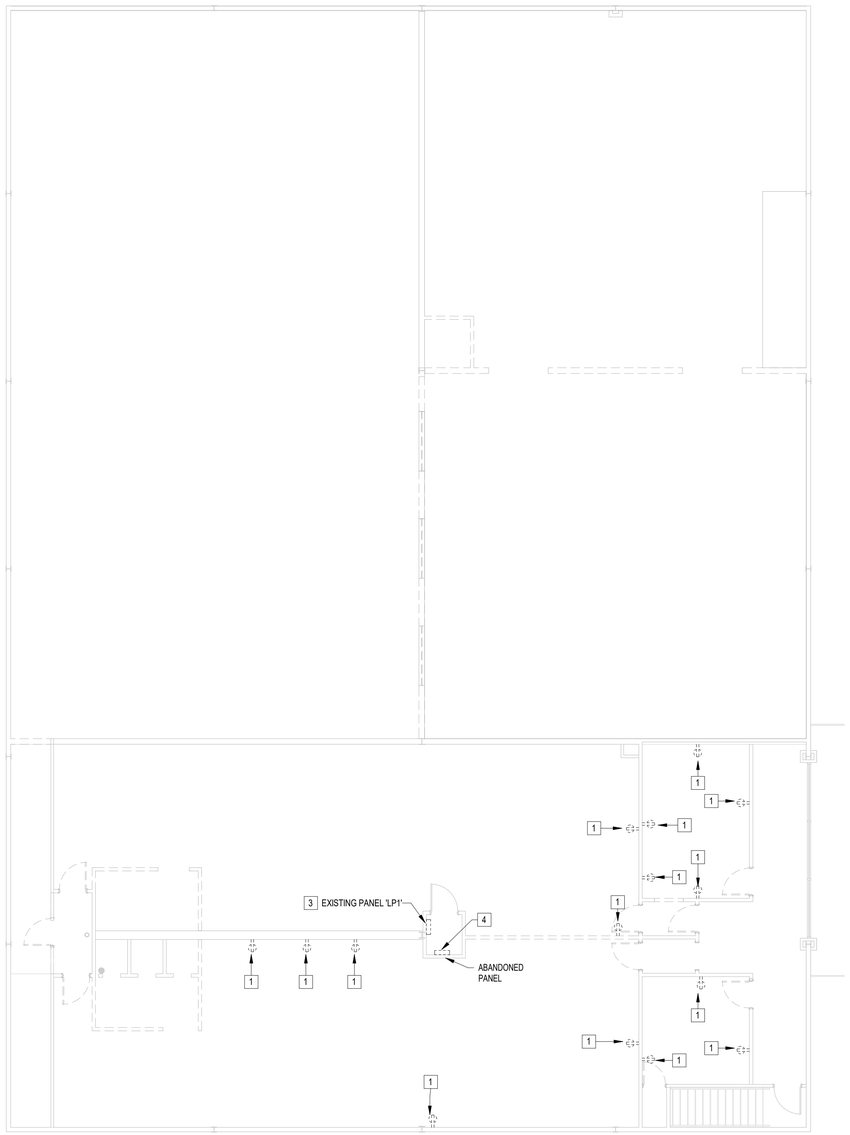

ELECTRICAL PLAN - SECOND FLOOR - DEMO

SCALE: 1/8" = 1'-0"

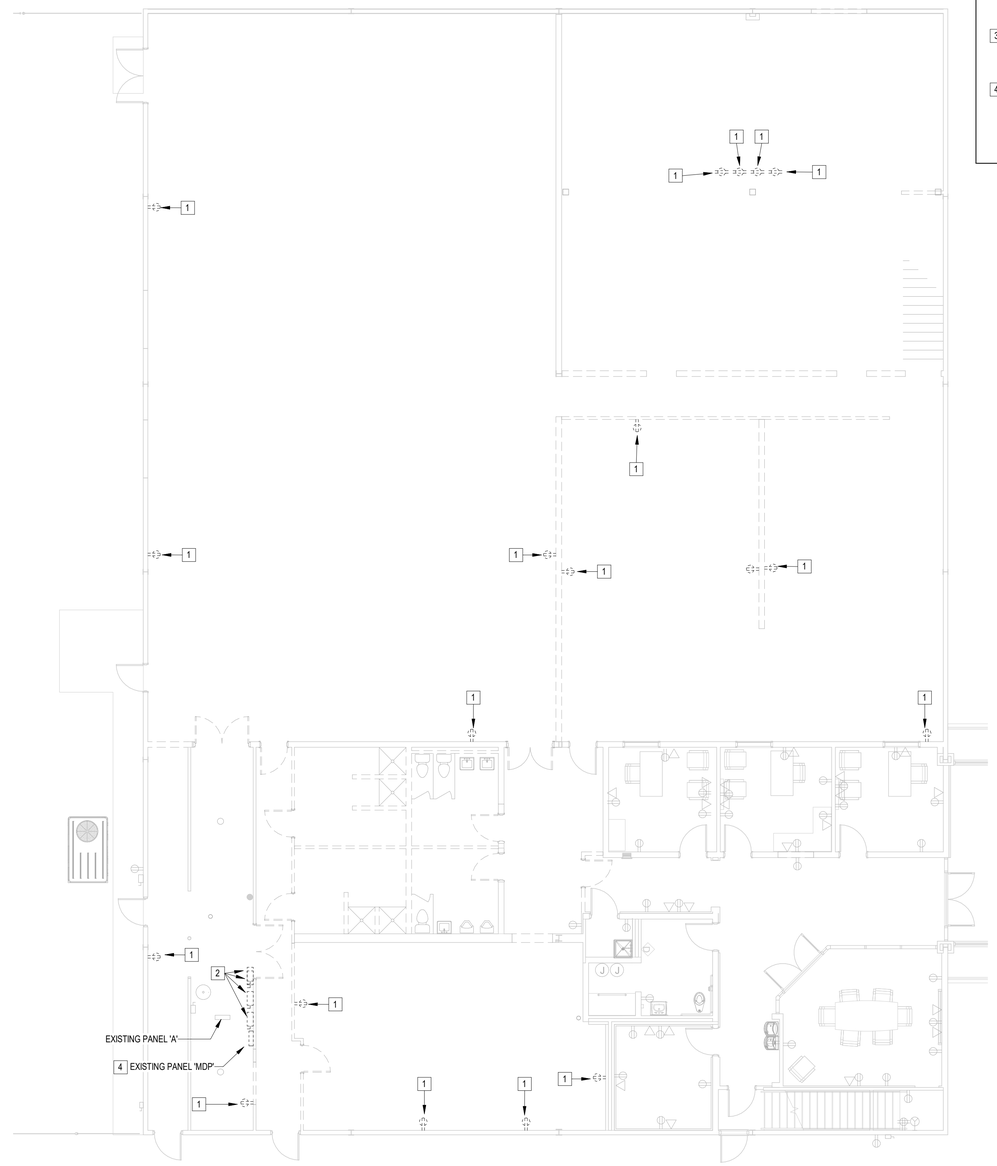

ELECTRICAL PLAN - FIRST FLOOR - DEMO

SCALE: 1/8" = 1'-0"

Renovations to Jonesboro Recreational Center

Jonesboro Arkansas Phase II

BRACKETT KRENNERICH architects

100 East Huntington Ave. Suite D P.O. Box 1655 870-932-0571 Fax 870-932-0975 www.bkarchts.com

Revision Schedule			
Tag	Rev. Description	Rev. Date	Issued by

CORPORATE REGISTRATION GARVER LLC No. 766 ARKANSAS ENGINEER

ARKANSAS REGISTERED PROFESSIONAL ENGINEER NO. 11-13-23 JOHN W. JOYCE

Commission Number 2127

E102

Date: February 25 2022

ELECTRICAL PLAN -DEMO

C:\Users\JWJoyce\OneDrive - Garver\Documents\Jonesboro Rec Center
CENTRAL.rvt
3/2/2022 9:48:08 AM

ELECTRICAL KEYED NOTES

1. TYPE 'C' FIXTURES IN THE SHOWER AREA SHALL BE SWITCHED INDEPENDENTLY OF THE OCCUPANCY SENSOR IN THE RESTROOM.
2. RECONNECT EXISTING FIXTURE TO NEW CIRCUIT SERVING THIS SPACE.
3. PROVIDE NEW SWITCH AT THIS LOCATION. RECONNECT AS SHOWN.

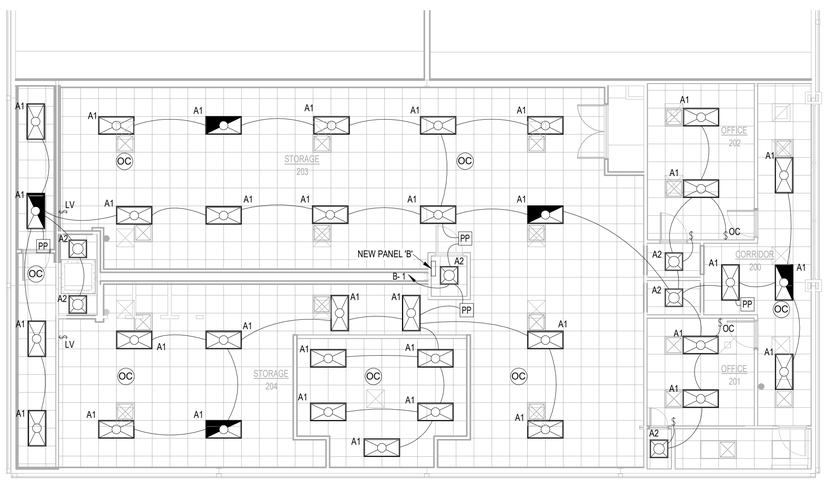

ELECTRICAL RCP - SECOND FLOOR - NEW

SCALE: 1/8" = 1'-0"

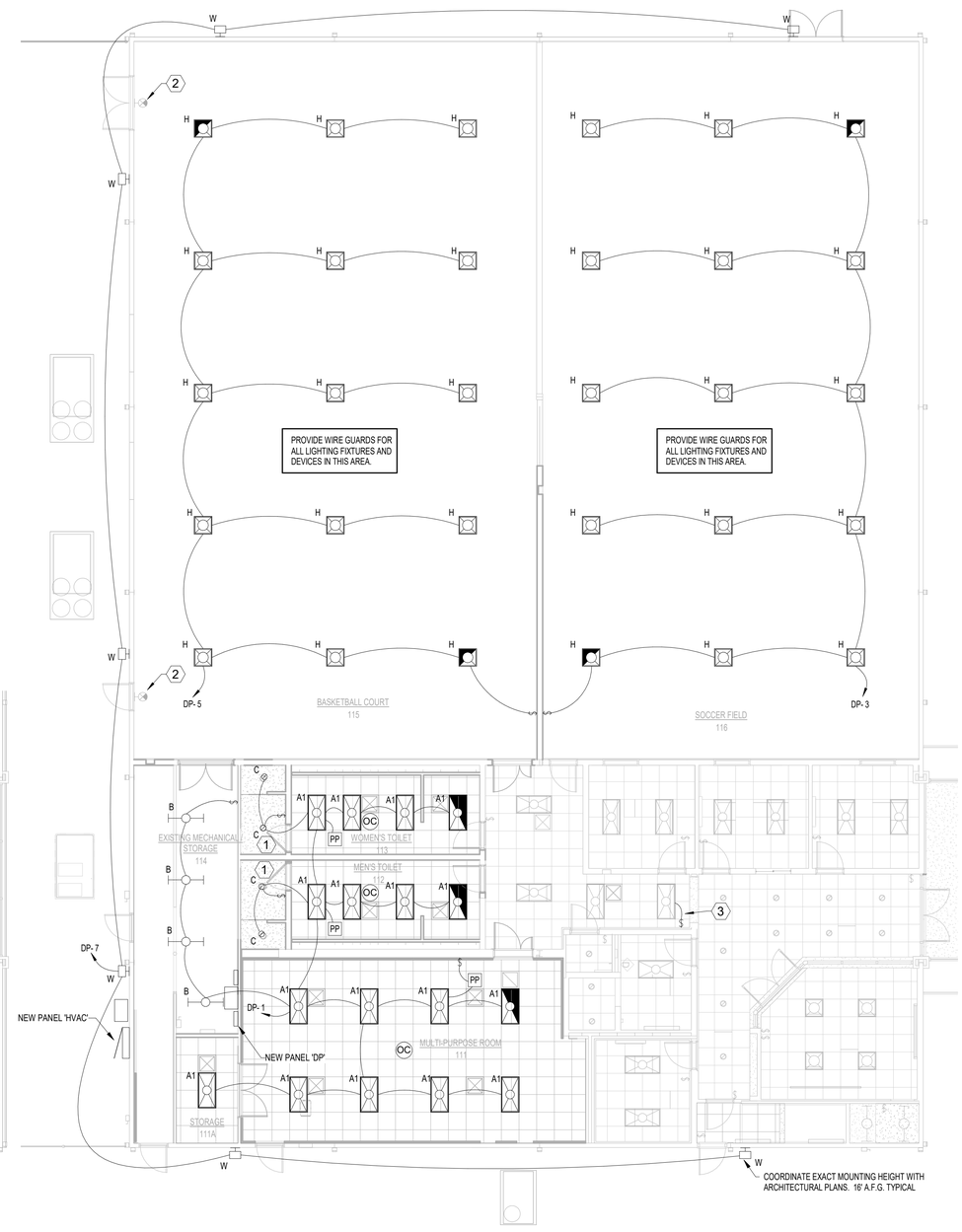

ELECTRICAL RCP - FIRST FLOOR - NEW

SCALE: 1/8" = 1'-0"

Renovations to Jonesboro Recreational Center

Jonesboro Arkansas Phase II

BRACKETT KRENNERICH architects

100 East Huntington Ave. Suite D P.O. Box 1655 870-932-0571 Fax 870-932-0975 www.bkarchts.com

Revision Schedule			
Typ	Rev. Description	Rev. Date	Issued by

CORPORATE REGISTRATION GARVER LLC No. 766 ARKANSAS ENGINEER

ARKANSAS REGISTERED PROFESSIONAL ENGINEER NO. 11-12328 JOHN W. JOYCE 3-1-2022

Commission Number 2127

E103

Date: February 25 2022

ELECTRICAL REFLECTED CEILING PLAN -NEW

C:\Users\JWJoyce\OneDrive - Garver\Documents\Jonesboro Rec Center
CAD Drawing: E103.dwg
3/2/2022 9:48:11 AM

ELECTRICAL KEYED NOTES

1. PROVIDE POWER TO JUNCTION BOX ABOVE CEILING TO POWER FLUSH VALVES AND FAUCETS IN EACH RESTROOM. COORDINATE INSTALLATION OF JUNCTION BOX MOUNTED TRANSFORMER PROVIDED BY PLUMBER. PROVIDE FINAL CONNECTION FROM TRANSFORMER TO DEVICES PER MANUFACTURER'S INSTALLATION INSTRUCTIONS.
2. PROVIDE JUNCTION BOX WITH CIRCUIT FOR OWNER PROVIDED HAND DRYER. COORDINATE THE EXACT LOCATION OF HAND DRYER WITH THE OWNER PRIOR TO INSTALLATION.
3. REUSE EXISTING RECEPTACLE BACK BOX AND CONDUIT AT THIS LOCATION. PROVIDE NEW CIRCUIT, RECEPTACLE, AND COVERPLATE.

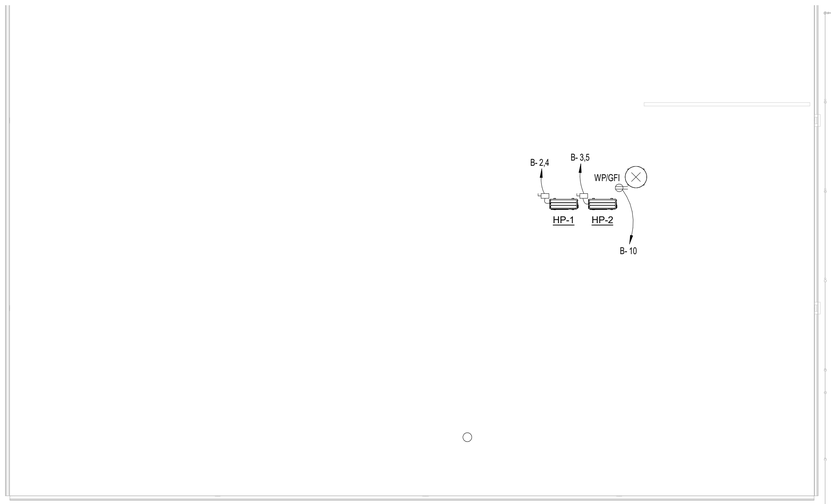

ELECTRICAL PLAN - ROOF - NEW

SCALE: 1/8" = 1'-0"

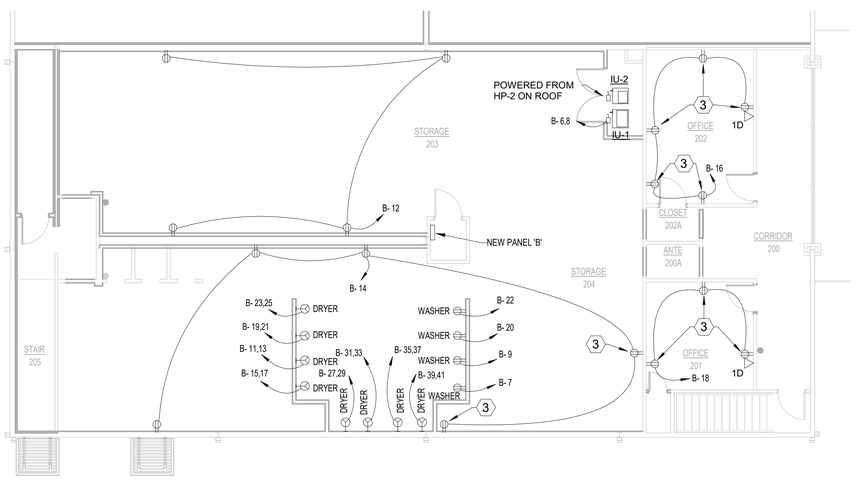

ELECTRICAL PLAN - SECOND FLOOR - NEW

SCALE: 1/8" = 1'-0"

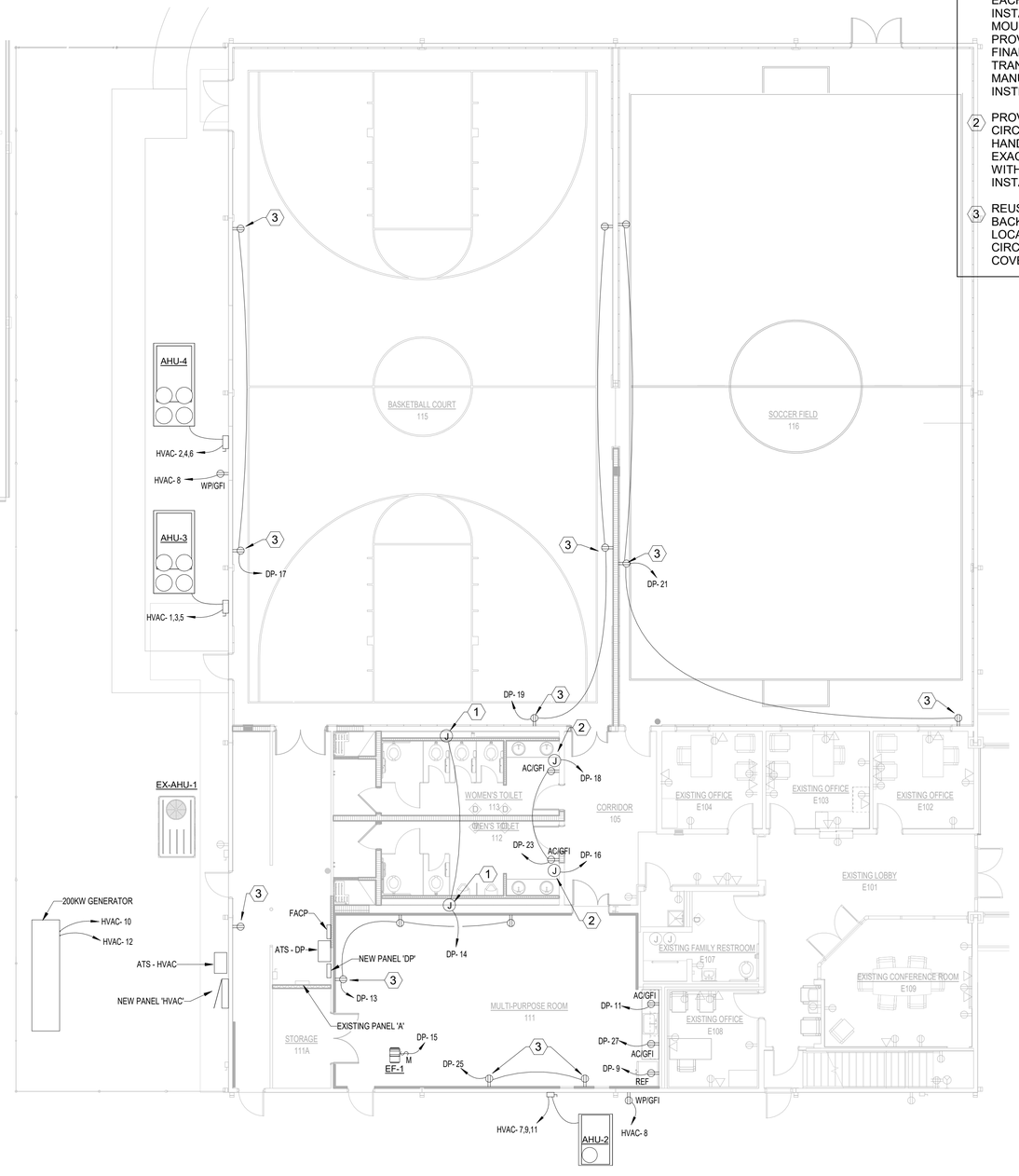

ELECTRICAL PLAN - FIRST FLOOR - NEW

SCALE: 1/8" = 1'-0"

Renovations to Jonesboro Recreational Center

Jonesboro Arkansas Phase II

BRACKETT KRENNERICH architects

100 East Huntington Ave. Suite D P.O. Box 1655 870-932-0571 Fax 870-932-0975 www.bkarchts.com

Revision Schedule			
Tag	Rev. Description	Rev. Date	Issued by

CORPORATE REGISTRATION GARVER LLC No. 766 ARKANSAS ENGINEER

ARKANSAS PROFESSIONAL ENGINEER NO. 11812 JOSHUA W. WOYCE 2/25/22

Commission Number 2127

E104

Date: February 25 2022

ELECTRICAL PLAN -NEW

C:\Users\JWoyce\OneDrive - Garver\Documents\Jonesboro Rec Center
2022 Revit central_JWoyce.rvt
3/2/2022 9:48:14 AM

ELECTRICAL KEYED NOTES

1. AT THIS LOCATION, PROVIDE SINGLE ACTION FIRE ALARM PULL STATION WITH PROTECTIVE COVER EQUAL TO STI STOPPER II.
2. PROVIDE PROTECTIVE WIRE CAGE FOR ALL FIRE ALARM DEVICES IN THE GYM AREA.
3. PROVIDE DUCT MOUNTED SMOKE DETECTORS MOUNTED JUST INSIDE THE BUILDING ON BOTH SUPPLY AND RETURN DUCTS. DETECTORS SHALL REPORT STATUS TO THE FIRE ALARM CONTROL PANEL AND BE INTERLOCKED TO SHUTDOWN POWER TO THE UNIT IF SMOKE IS DETECTED.

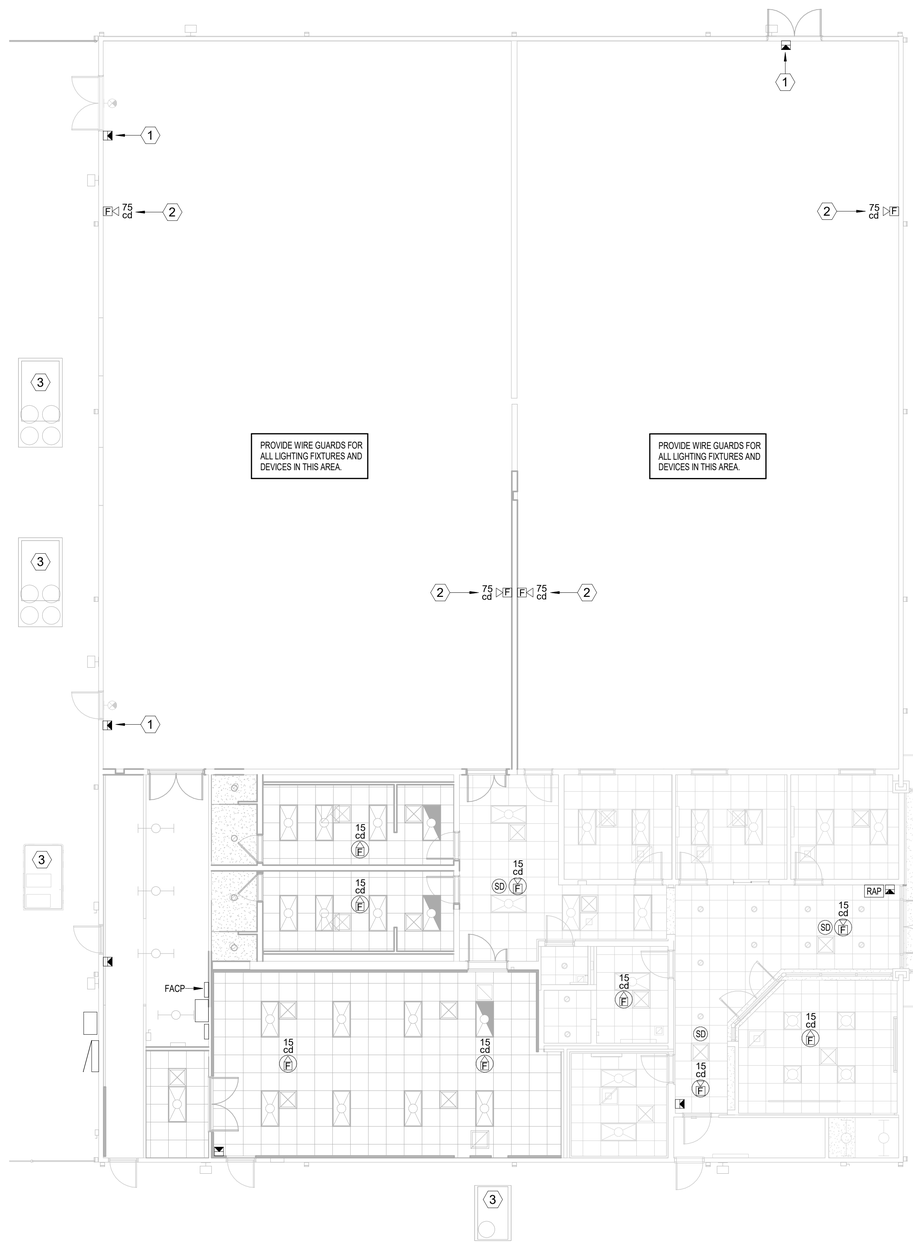

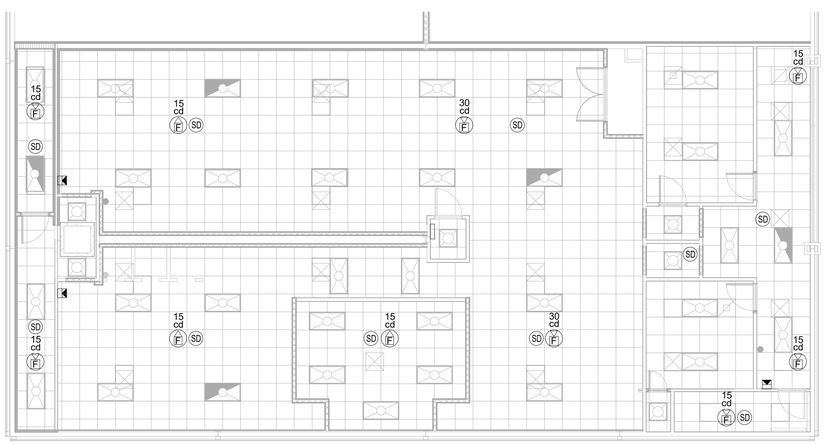

FIRE ALARM PLAN - SECOND FLOOR

SCALE: 1/8" = 1'-0"

FIRE ALARM PLAN - FIRST FLOOR

SCALE: 1/8" = 1'-0"

Renovations to Jonesboro Recreational Center

Jonesboro Arkansas Phase II

BRACKETT KRENNERICH architects

100 East Huntington Ave. Suite D P.O. Box 1655 870-932-0571 Fax 870-932-0975 www.bkarchts.com

Revision Schedule			
Typ	Rev. Description	Rev. Date	issued by

CORPORATE REGISTRATION GARVER LLC No. 766 ARKANSAS ENGINEER

REGISTERED ARKANSAS PROFESSIONAL ENGINEER NO. 11128 JOHN W. JONES 2/25/22

Commission Number 2127

E105

Date: February 25 2022

FIRE ALARM PLAN

C:\Users\JWJoyce\OneDrive - Garver\Documents\Jonesboro Rec Center
c2r_2022_JWJONES.rvt
3/2/2022 9:48:15 AM

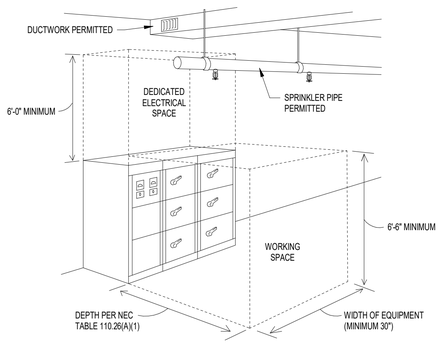

1 ELECTRICAL CLEARANCE DETAIL
SCALE: N.T.S.

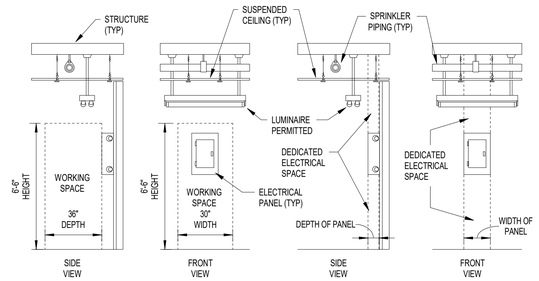

2 ELECTRICAL PANEL CLEARANCE
SCALE: N.T.S.

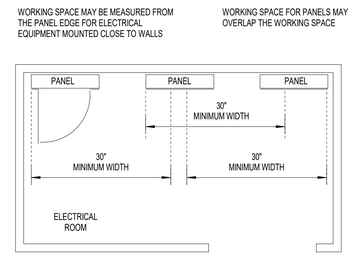

3 ELECTRICAL WORKING SPACE
SCALE: N.T.S.

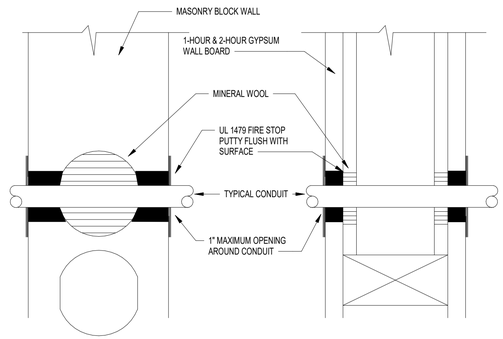

4 FIRE WALL PENETRATION
SCALE: N.T.S.

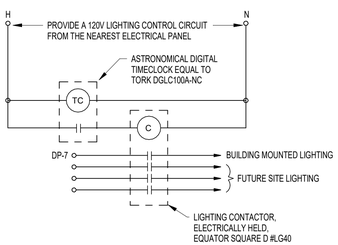

5 LIGHTING CONTACTOR DETAIL
SCALE: N.T.S.

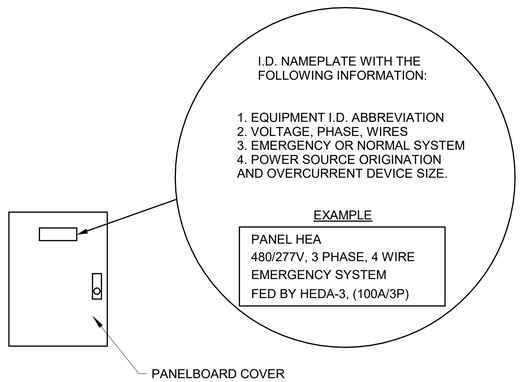

PANEL IDENTIFICATION NOTES:

1. SIMILAR FOR DISCONNECTS, MOTOR CONTROLLERS, TRANSFORMERS, LIGHTING CONTROL PANEL, AUTOMATIC TRANSFER SWITCHES, ETC.
2. PROVIDE PANEL IDENTIFICATION FOR ALL NEW PANELS AND FOR ALL EXISTING REWORKED PANELS THAT DO NOT CURRENTLY HAVE IDENTIFICATION TAGS IN PLACE.

6 PANEL IDENTIFICATION DETAIL
SCALE: N.T.S.

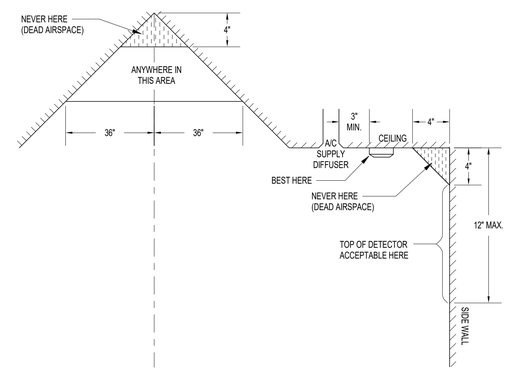

7 SMOKE DETECTOR MOUNTING DETAIL
SCALE: N.T.S.

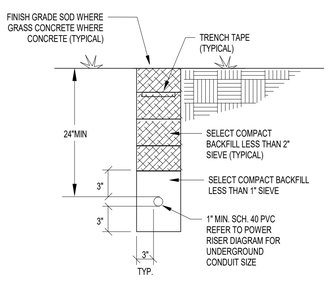

TYPICAL DITCHING DETAIL
600 VOLTS OR LESS

8 UNDERGROUND CONDUIT DETAIL
SCALE: N.T.S.

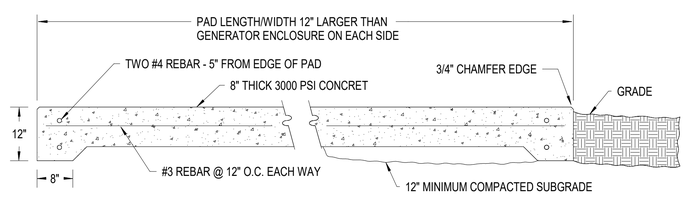

9 HVAC EQUIPMENT PAD DETAIL
SCALE: NOT TO SCALE:

Renovations to Jonesboro Recreational Center
Jonesboro Arkansas
Phase II

BRACKETT KRENNERICH architects
100 East Huntington Ave. Suite D P.O. Box 1655 870-932-0571 Fax 870-932-0975 www.bkarchts.com

Revision Schedule			
Tag	Rev. Description	Rev. Date	Issued by

CORPORATE REGISTRATION GARVER LLC No. 766 ARKANSAS ENGINEER

ARKANSAS REGISTERED PROFESSIONAL ENGINEER NO. 11-11208 2/25/22

Commission Number 2127

E501

Date: February 25 2022

ELECTRICAL DETAILS

C:\Users\JWilcox\OneDrive - Garver\Documents\Jonesboro Rec Center
2021-2022.rvt
3/2/2022 9:48:17 AM

PANEL NAME:	VOLTAGE:	PHASE:	WIRE:	NEUTRAL RATING:	PANEL DESCRIPTION:
DP	**120/208 Wye**	**3**	**4**	**100.00%**	**NEW PANEL 'DP'**
MAINS:	MOUNTING:	MAX NO. OF CIRCUITS	MANUFACTURER:	PANEL AIC RATING:	LOCATION:
400 A MLO	**SURFACE**	**42**	**SQUARE D**	**22K AIC**	**Space 31**

CKT	DESCRIPTION	BRKR	WIRE	A		B		C		WIRE	BRKR	DESCRIPTION	CKT
1	LGTS - FIRST FLOOR	20A	12	653	11692								2
3	LGTS - GYM	20A	12			1515	10884			3/0	150A	EXISTING PANEL 'A'	4
5	LGTS - GYM	20A	12					1515	14990				6
7	LGTS - EXTERIOR	20A	12	175	15431								8
9	REFRIGERATOR	20A	12			1000	17236			3/0	200A	NEW PANEL 'B'	10
11	RCPT - ABOVE COUNTER	20A	12					180	14338				12
13	RCPT - RM 111	20A	12	540	1000					12	20A	FLUSH VALVES	14
15	EF-1	20A	12			600	1500			12	20A	HAND DRYER	16
17	RCPT - RM 115	20A	12					360	1500	12	20A	HAND DRYER	18
19	RCPT - RM 115	20A	12	540	0						20A	SPARE	20
21	RCPT - RM 116	20A	12			540	0				20A	SPARE	22
23	RCPT - RESTROOMS	20A	12					360	0		20A	SPARE	24
25	RCPT - RM 111	20A	12	360	0						20A	SPARE	26
27	RCPT - ABOVE COUNTER	20A	12			180	0				20A	SPARE	28
29	SPARE	20A						0	0		20A	SPARE	30
31	SPARE	20A		0	0						20A	SPARE	32
33	SPACE					0	0					SPACE	34
35	SPACE							0	0			SPACE	36
37	SPACE			0	0							SPACE	38
39	SPACE					0	0					SPACE	40
41	SPACE							0	0			SPACE	42
			Total Load:	30387 VA		33383 VA		33172 VA					
			Total Amps:	253 A		282 A		280 A					

NOTES:

PANEL NAME:	VOLTAGE:	PHASE:	WIRE:	NEUTRAL RATING:	PANEL DESCRIPTION:
HVAC	**120/208 Wye**	**3**	**4**	**100.00%**	**NEW PANEL 'HVAC'**
MAINS:	MOUNTING:	MAX NO. OF CIRCUITS	MANUFACTURER:	PANEL AIC RATING:	LOCATION:
600 A MLO	**SURFACE**	**30**	**SQUARE D**	**22K AIC**	

CKT	DESCRIPTION	BRKR	WIRE	A		B		C		WIRE	BRKR	DESCRIPTION	CKT
1				20760	20760								2
3	AHU-3	200A	3/0			20760	20760			3/0	200A	AHU-4	4
5								20760	20760				6
7				4920	360					12	20A	RCPT - EXTERIOR	8
9	AHU-2	50A	6			4920	500			10	20A	BLOCK HEATER	10
11								4920	500	10	20A	BATTERY CHARGER	12
13	SPACE			0	0							SPACE	14
15	SPACE					0	0					SPACE	16
17	SPACE							0	0			SPACE	18
19	SPACE			0	0							SPACE	20
21	SPACE					0	0					SPACE	22
23	SPACE							0	0			SPACE	24
25	SPACE			0	0							SPACE	26
27	SPACE					0	0					SPACE	28
29	SPACE							0	0			SPACE	30
			Total Load:	46800 VA		46940 VA		46940 VA					
			Total Amps:	390 A		391 A		391 A					

NOTES:

PANEL NAME:	VOLTAGE:	PHASE:	WIRE:	NEUTRAL RATING:	PANEL DESCRIPTION:
B	**120/208 Wye**	**3**	**4**	**100.00%**	**NEW PANEL 'B'**
MAINS:	MOUNTING:	MAX NO. OF CIRCUITS	MANUFACTURER:	PANEL AIC RATING:	LOCATION:
225 A MLO	**SURFACE**	**42**	**SQUARE D**	**22K AIC**	**STORAGE 5**

CKT	DESCRIPTION	BRKR	WIRE	A		B		C		WIRE	BRKR	DESCRIPTION	CKT
1	LGTS - UPPER LEVEL	20A	12	954	3328					8	50A	HP-1	2
3	HP-2	40A	8			3328	3328						4
5								3328	750	12	15A	IU-1	6
7	WASHER	20A	12	1000	750								8
9	WASHER	20A	12			1000	180			12	20A	RCPT - ROOF	10
11	DRYER	30A	10					1500	720	12	20A	RCPT - RM 203	12
13				1500	900					12	20A	RCPT - RM 204	14
15	DRYER	30A	10			1500	900			12	20A	RCPT - RM 202	16
17								1500	540	12	20A	RCPT - RM 201	18
19	DRYER	30A	10	1500	1000					12	20A	WASER	20
21						1500	1000			12	20A	WASHER	22
23	DRYER	30A	10					1500	0			SPACE	24
25				1500	0							SPACE	26
27	DRYER	30A	10			1500	0					SPACE	28
29								1500	0			SPACE	30
31	DRYER	30A	10	1500	0							SPACE	32
33						1500	0					SPACE	34
35	DRYER	30A	10					1500	0			SPACE	36
37				1500	0							SPACE	38
39	DRYER	30A	10			1500	0					SPACE	40
41								1500	0			SPACE	42
			Total Load:	15431 VA		17236 VA		14338 VA					
			Total Amps:	130 A		145 A		119 A					

NOTES:

LIGHTING FIXTURE SCHEDULE

MARK	MANUFACTURER	MODEL	ELECTRICAL DATA	DESCRIPTION
A1	COLUMBIA LIGHTING	LCAT24-40VWG-ED-U	120 V/1-24 VA	2X4 LED VOLUMETRIC RECESSED, 3000 LUMEN, 4000K
A2	COLUMBIA LIGHTING	LCAT22-40MWG-ED-U	120 V/1-18 VA	2X2 LED VOLUMETRIC, 2000 LUMEN, 4000K
B	COLUMBIA LIGHTING	CSL4-LSCS	120 V/1-30 VA	4' LED LINEAR STRIP FIXTURE
C	PRESCOLITE LIGHTING	LBSE-6RD-35K8-WH	120 V/1-32 VA	6" LED DOWNLIGHT 1000 LUMEN, 3500K
H	COLUMBIA LIGHTING	CLB2-40MM-W-EDU	120 V/1-101 VA	LED HIGHBAY FIXTURE, 14,000 LUMEN, 4,000K
W	HUBBELL LIGHTING	TRP2-D-20-4K7-WT-120-COLOR-PC-E	120 V/1-25 VA	LED WALL PACK W/ EMERGENCY BATTERY BACKUP, 3000 LUMEN
X	LITHONIA	LQM-S-W-3-R-120/277-ELN	120 V/1-5 VA	WALL MOUNT LED EXIT SIGN

ELECTRICAL EQUIPMENT SCHEDULE

MARK	DESCRIPTION	VOLTAGE/PHASE	MCA	MOCP	CIRCUIT	DISCONNECT	COMMENTS
AHU-2	AIR HANDLING UNIT	208V/3-PHASE	41 A	50 A	3/4"C-3#6,1#10(G)	60A/3P, NEMA 3R, NON-FUSIBLE	
AHU-3	AIR HANDLING UNIT	208V/3-PHASE	173.3 A	200 A	2"C-3#3/0,1#6(G)	200A/3P, NEMA 3R, NON-FUSIBLE	
AHU-4	AIR HANDLING UNIT	208V/3-PHASE	173.3 A	200 A	2"C-3#3/0,1#6(G)	200A/3P, NEMA 3R, NON-FUSIBLE	
HP-1	HEAT PUMP	208V/1-PHASE	32 A	50 A	3/4"C-2#8,1#10(G)	60A/2P, NEMA 3R, NON-FUSIBLE	
HP-2	HEAT PUMP	208V/1-PHASE	31.3 A	40 A	3/4"C-2#8,1#10(G)	60A/2P, NEMA 3R, NON-FUSIBLE	NOTE 1
IU-1	AIR HANDLING UNIT	208V/1-PHASE	7.2 A	15 A	3/4"C-2#12,1#12(G)	30A/2P, NEMA 1, NON-FUSIBLE	
IU-2	AIR HANDLING UNIT	208V/1-PHASE	- A	- A	3/4"C-2#12,1#12(G)	30A/2P, NEMA 1, NON-FUSIBLE	NOTE 1
EF-1	EXHAUST FAN	120V/1-PHASE	7.2 A	15 A	3/4"C-1#12,1#12(N),1#12(G)	MOTOR RATED TOGGLE	

NOTES:
1. INDOOR UNIT (IU-2) IS POWERED FROM CORRESPONDING OUTDOOR UNIT (HP-2). PROVIDE CONNECTION FROM OUTDOOR TO INDOOR UNITS PER MANUFACTURER'S REQUIREMENTS.

CORPORATE REGISTRATION GARVER LLC No. 766 ARKANSAS ENGINEER

ARKANSAS REGISTERED PROFESSIONAL ENGINEER NO. 11-11208 2/25/22 JASON W. LOVE

Commission Number 2127

E601

Date: February 25 2022

Renovations to
Jonesboro Recreational Center
Jonesboro Arkansas
Phase II

BRACKETT KRENNERICH architects
100 East Huntington Ave. Suite D P.O. Box 1655 870-932-0571 Fax 870-932-0975 www.bkarchts.com

Revision Schedule			
Tag	Rev. Description	Rev. Date	Issued by

ELECTRICAL SCHEDULES

C:\Users\JWLoyce\OneDrive - Garver\Documents\Jonesboro Rec Center
Central Park.rvt
3/2/2022 9:48:19 AM

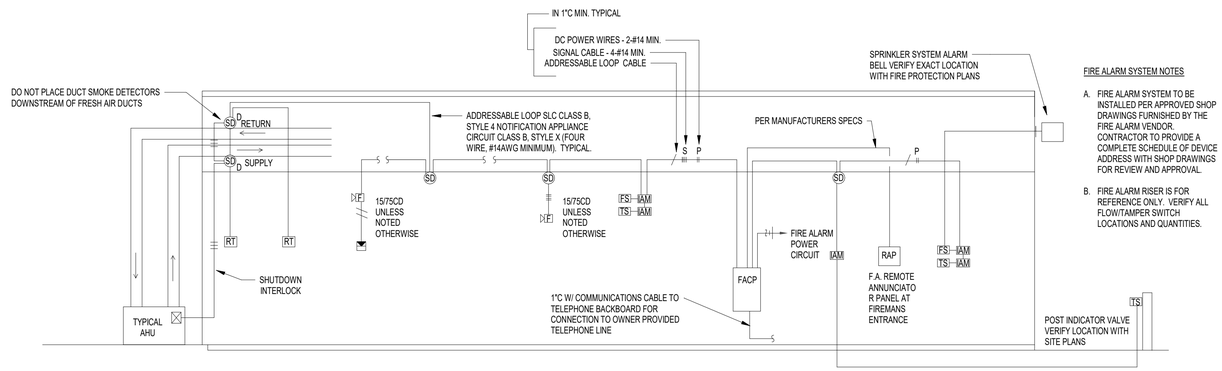

FIRE ALARM SYSTEM NOTES

A. FIRE ALARM SYSTEM TO BE INSTALLED PER APPROVED SHOP DRAWINGS FURNISHED BY THE FIRE ALARM VENDOR. CONTRACTOR TO PROVIDE A COMPLETE SCHEDULE OF DEVICE ADDRESS WITH SHOP DRAWINGS FOR REVIEW AND APPROVAL.

B. FIRE ALARM RISER IS FOR REFERENCE ONLY. VERIFY ALL FLOW/TAMPER SWITCH LOCATIONS AND QUANTITIES.

1 FIRE ALARM RISER DIAGRAM
SCALE: N.T.S.

DEMOLITION KEYED NOTES:

1. REMOVE EXISTING WIREWAY. RETAIN EXISTING SERVICE CONDUCTORS TO FEED NEW DISTRIBUTION PANEL.
2. REMOVE EXISTING DISCONNECT AND ASSOCIATED FEEDER CONDUCTORS AND CONDUIT.
3. REMOVE EXISTING PANEL 'MDP'.
4. REMOVE EXISTING PANEL 'LP1'. RETAIN EXISTING CIRCUITS TO BE RELOCATED TO PANEL 'B'.

CONSTRUCTION KEYED NOTES:

1. PROVIDE A NEW 500A CIRCUIT BREAKER IN EXISTING CUTLER-HAMMER PANEL 'MDP' TO POWER NEW PANEL 'HVAC'.
2. NEW 200KW/250KVA DIESEL GNERATOR WITH 48-HOUR BASE TANK. PROVIDE TWO OUTPUT CIRCUIT BREAKERS. ONE 400A BREAKER TO FEED PANEL 'DP'. ONE 500A BREAEKR TO FEED PANEL 'HVAC'.
3. NEW PANEL 'HVAC' STANDBY AND UTILITY FEEDERS: (2-SETS EA.) 3"C-3#250KCMIL,1#250KCMIL,1#2/0(G).
4. PROVIDE ONE 2" CONDUIT FROM EACH ATS TO GENERATOR FOR CONTROLS WIRING.
5. NEW PANEL 'DP' STANDBY FEEDER: 3-1/2"C-3#500KCMIL,1#500KCMIL(N),1#3(G). EXTEND CONDUIT UP WALL ON THE EXTERIOR OF THE BUILDING. COORDINATE THE EXACT HEIGHT OF WALL PENETRATION WITH INTERIOR STRUCTURE (APPROX. 10' A.F.G.)
6. REUSE EXISTING 400A FEEDER TO POWER NEW PANEL 'DP'.
7. NEW PANEL 'A' FEEDER: 2"C-3#3/0,1#3/0(N),1#6(G)
8. NEW PANEL 'B' FEEDER: 2"C-3#3/0,1#3/0(N),1#6(G)

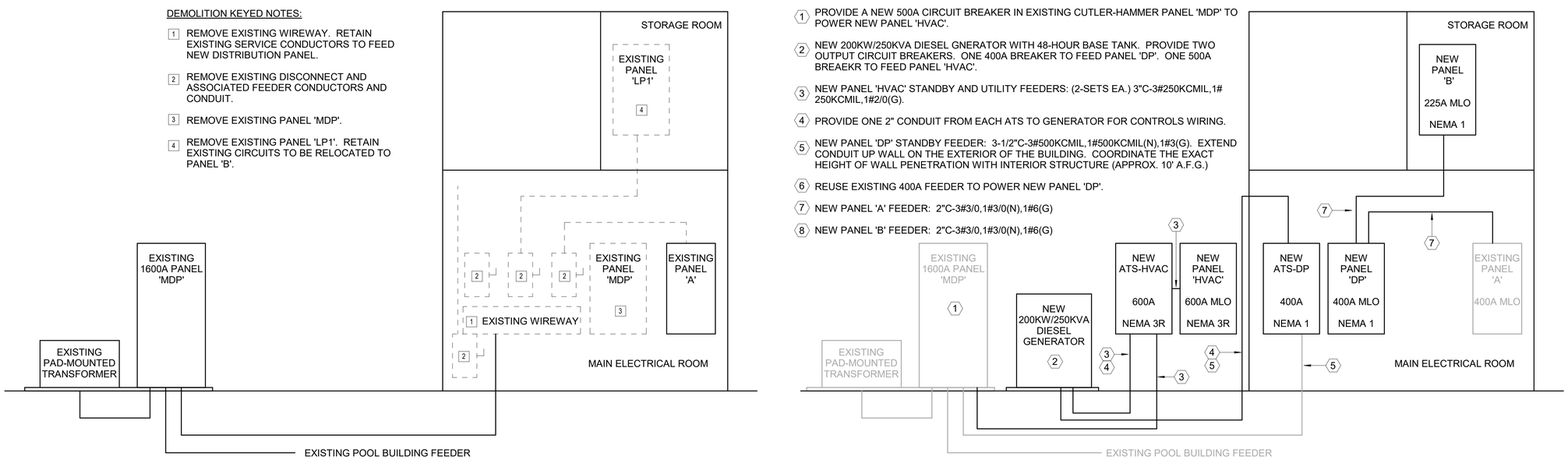

2 POWER RISER DIAGRAM
SCALE: N.T.S.

Renovations to
Jonesboro Recreational Center
Jonesboro Arkansas
Phase II

BRACKETT KRENNERICH architects
100 East Huntington Ave. Suite D P.O. Box 1655 870-932-0571 Fax 870-932-0975 www.bkarchts.com

Revision Schedule

Tag	Rev. Description	Rev. Date	Issued by

CORPORATE REGISTRATION GARVER LLC No. 766 ARKANSAS ENGINEER

REGISTERED ARKANSAS PROFESSIONAL ENGINEER NO. 11128 JOHN W. JOYCE 3-25-22

Commission Number 2127

E602

Date: February 25 2022

ELECTRICAL RISER DIAGRAM

C:\Users\JWJoyce\OneDrive - Garver\Documents\Jonesboro Rec Center
c:\pw_temp\E602.rvt
3/2/2022 9:48:20 AM