# POINSETT COUNTY COURTHOUSE ANNEX

# POINSETT COUNTY

## Harrisburg, Arkansas


**STRUCTURAL ENGINEER:**
SMITH ENGINEERING CO.
P.O. BOX 299
Marion, AR 72364
870.739.5533

STRICKLAND ENGINEERING

**MECHANICAL/PLUMBING/ELECTRICAL ENGINEER:**
STRICKLAND ENGINEERING
113 West Main St. Suite 1
Jackson, MO 63755
573.243.4080

**CIVIL ENGINEER:**
ASSOCIATED ENGINEERING AND TESTING, LLC
103 Church Street
Jonesboro, AR 72403
870.932.3594

**ARCHITECT:**
BRACKETT KRENNERICH
100 East Huntington Ave, Suite D
Jonesboro, Arkansas 72403
870.932.0571
www.bkarchts.com


## ABBREVIATIONS

| | |
|---|---|
| ABOVE FINISH FLOOR | A.F.F. |
| ABOVE | ABV. |
| ACOUSTICAL | ACOUST. |
| ALUMINUM | ALUM. |
| APPOXIMATE | APPROX. |
| BOTTOM OF FOOTING | B.O.F. |
| CEILING | CLG. |
| CENTER LINE | ℄ |
| CONCRETE MASONRY UNIT | CMU |
| EACH | EA. |
| ELECTRIC WATER COOLER | E.W.C. |
| FINISH | FIN. |
| FIRE EXTINGUISHER | F.E. |
| FIRE EXTINGUISHER CABINET | F.E.C. |
| FLOOR | FLR. |
| GENERAL CONTRACTOR | G.C. |
| INSULATION | INSUL. |
| JOINT | JNT. |
| KITCHEN FIRE EXTINGUISHER | K.F.E. |
| MECHANICAL | MECH. |
| METAL THRESHOLD | M.T. |
| NOMINAL | NOM. |
| NOT IN CONTRACT | N.I.C. |
| ON CENTER | O.C. |
| OWNER FURNISHED, CONTRACTOR INSTALLED | OFCI |
| PLATE | PL |
| REQUIRED | REQ. |
| SIMILAR | SIM. |
| SQUARE | SQ. |
| SUSPENDED | SUSP. |
| TOP OF CURB | T.O.C. |
| TOP OF MASONRY | T.O.M. |
| TOP OF FOOTING | T.O.F. |
| TOP OF WALL/WALK | T.O.W. |
| TYPICAL | TYP. |
| UNLESS NOTED OTHERWISE | U.N.O. |
| VERIFY IN FIELD | V.I.F. |
| WITH | W/ |

## MATERIALS KEY

CONCRETE
STEEL
METAL STUDS
CONCRETE BLOCK
PLYWOOD
FINISH WOOD
BATT INSULATION
GYPSUM BOARD
RIGID INSULATION
WOOD FRAMING
COMPACT FILL
GRAVEL FILL
ASPHALT PAVING
EXTERIOR SHEATHING

## SYMBOLS KEY

SECTION — A / A500 — SECTION NUMBER / SHEET NUMBER
DETAIL — 1 / A001 — DETAIL NUMBER / SHEET NUMBER
DOOR — 100
WINDOW — A
ALUMINUM FRAME — AF-1
HOLLOW METAL FRAME — HMF-1
EXISTING CONTOUR LINE
NEW CONTOUR LINE
NEW SPOT ELEVATION — 235.56
FINISH ELEVATION — ELEV. = 100.00

## VICINITY MAP

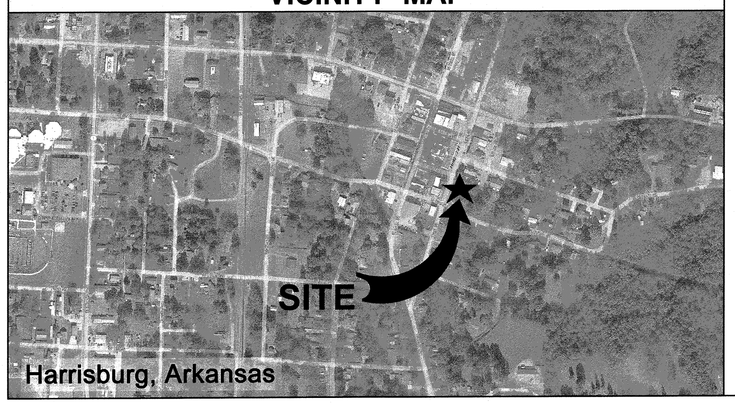


## SCHEDULE OF SPECIAL INSPECTIONS

| MATERIAL / ACTIVITY | SERVICE | APPLICABLE TO THIS PROJECT Y/N | EXTENT | AGENT* | DATE COMPLETED |
|---|---|---|---|---|---|
| **1704.2.2 Inspection of Fabricators** | | | | | |
| Verify fabrication/quality control procedures. | In-plant reviews (1) | | Periodic | 2 | |
| **1705.2 Structural Steel Construction** | | | | | |
| 1. Review the material test reports and certificates as listed in AISC 360-10, Section N3.2 for compliance with the construction documents | Submittal review | | Each submittal | 4 | |
| 2. Material verification of structural steel | Shop (3) and field inspection | | Periodic | 2 | |
| 3. Anchor Rods and other Embedments( Verify diameter, grade, type, length, embedment. See 1705.3 for anchors) | Field inspection | | Continuous | 2 | |
| 4. Verify member locations, braces, stiffeners, and application of joint details at each connection comply with construction documents | Field inspection | | Periodic | 2,4 | |
| 5. Structural steel welding: | | | | | |
| a. Inspection tasks Prior to Welding (Observe, or perform for each welded joint or member, the QA tasks listed in AISC 360, Table N5.4-1) | Shop (3) and field inspection | | Observe or Perform as noted (4) | 2 | |
| b. Inspection tasks During Welding (Observe, or perform for each welded joint or member, the QA tasks listed in AISC 360, Table N5.4-2) | Shop (3) and field inspection | | Observe (4) | 2 | |
| c. Inspection tasks After Welding (Observe, or perform for each welded joint or member, the QA tasks listed in AISC 360, Table N5.4-3) | Shop (3) and field inspection | | Observe or Perform as noted (4) | 2 | |
| d. Nondestructive testing (NDT) of welded joints: *see Commentary* | | | | | |
| 1) Complete penetration groove welds at joints in materials 5/16" thick or greater in Risk Category III or IV | Shop (3) or field ultrasonic testing - 100% | | Periodic | 2 | |
| 6. Structural steel bolting: | Shop (3) and field inspection | | | | |
| a. Inspection tasks Prior to Bolting (Observe, or perform tasks for each bolted connection, in accordance with QA tasks listed in AISC 360-10, Table N5.6-1) | | | Observe or Perform as noted (4) | 2 | |
| b.Inspection tasks During Bolting (Observe the QA tasks listed in AISC 360-10, Table N5.6-2) | | | Observe (4) | 2 | |
| 1) Pre-tensioned and slip-critical joints | | | | | |
| a) Turn-of-nut with matching markings | | | Periodic | 3 | |
| b) Direct tension indicator | | | Periodic | 2 | |
| c) Twist-off type tension control bolt | | | Periodic | 2 | |
| d) Turn-of-nut without matching markings | | | Continuous | 2 | |
| e) Calibrated wrench | | | Continuous | 2 | |
| c. Inspection tasks After Bolting (Perform tasks for each bolted connection in accordance with QA tasks listed in AISC 360, Table N5.6-3) | | | Perform (4) | 2 | |
| 7. Inspection of steel elements dfbcmposite construction prior to concrete placement in accordance with QA tasks listed in AISC 360-10, Table N6.1 and Section N6 | Shop (3) and field inspection and testing | | Observe or Perform as noted (4) | 2 | |
| a. Placement and installation of steel deck | | | Periodic | 2 | |
| b. Placement and installation of steel headed stud anchors | | | Periodic | 2 | |
| **1705.2.2 Steel Construction Other Than Structural Steel** | | | | | |
| 1. Material verification of cold-formed steel deck: | | | | | |
| a. Identification markings | Field inspection | | Periodic | 2 | |
| b. Manufacturer's certified test reports | Submittal Review | | Each submittal | 3,4 | |
| 2. Connection of cold-formed steel deck to supporting structure: | Shop (3) and field inspection | | | | |
| a. Welding | | | Periodic | 2 | |
| b. Other fasteners (in accordance with AISC 360,Section N6) | | | | | |
| 1) Verify fasteners are in conformance with approved submittal | | | Periodic | 2 | |
| 2) Verify fastener installation is in conformance with approved submittal and manufacturer's recommendations. | | | Periodic | 2 | |
| **1705.3 Concrete Construction** | | | | | |
| 1. Inspection of reinforcing steel placement | Field inspection | | Periodic | 2,3 | |
| 2. Inspection of anchors and reinforcing steel post-installed in hardened concrete: Per research reports requirements | Field inspection | | Continuous | 2,4 | |
| 3. Verify use of approved design mix: | Shop (3) and field inspection | | Periodic | 2,3,4 | |
| 4. Fresh concrete sampling, perform slump and air content tests and determine temperature of concrete | Shop (3) and field inspection | | Continuous | 2 | |
| 5. Inspection for maintenance of specified curing temperature and techniques | Shop (3) and field inspection | | Periodic | 3 | |
| 6. Inspection of formwork for shape, lines, location and dimensions | Field inspection | | Periodic | 2,3 | |
| 7. Concrete strength testing and verification of compliance with construction documents | Field testing and review of | | Periodic | 2,3,4 | |
| **1705.4 Masonry Construction (LEVEL B)** | | | | | |
| 1. Verify compliance with approved submittals | Field Inspection | | Periodic | 2,3 | |
| 2. Verification of $f'_m$ and $f'_{AAC}$ prior to construction | Testing by unit strength method or prism test method | | Periodic | 2 | |
| 3. Verify grade, type, and size of reinforcement and anchor bolts, and prestressing tendons and anchorages | Field Inspection | | Periodic | 2,3 | |
| 4. Verify placement of reinforcement, connectors, and anchorages | Field Inspection | | Level B - Periodic<br>Level C - Continuous | 2,3 | |
| 5. Verify grout space prior to grouting | Field Inspection | | Level B - Periodic<br>Level C - Continuous | 2 | |
| 6. Verify type, size, and location of anchors, including details of anchorage of masonry to structural members, frames, or other construction. | Field Inspection | | Level B - Periodic<br>Level C - Continuous | 2 | |
| 7. Verify preparation, construction, and protection of masonry during cold weather (temperature below 40° F) or hot weather (temperature above 90° F) | Field Inspection | | Periodic | 2 | |
| 8. Prepare grout and mortar specimens | Field testing | | Level B - Periodic<br>Level C - Continuous | 2 | |
| **1705.6 Soils** | | | | | |
| 1. Verify materials below shallow foundations are adequate to achieve the design bearing capacity. | Field inspection | | Periodic | 1 | |
| 2. Verify excavations are extended to proper depth and have reached proper material. | Field inspection | | Periodic | 1 | |
| 3. Perform classification and testing of controlled fill materials. | Field inspection | | Periodic | 1 | |
| 4. Verify use of proper materials, densities, and lift thicknesses during placement and compaction of compacted fill | Field inspection | | Continuous | 1 | |
| 5. Prior to placement of controlled fill, observe subgrade and verify that site has been prepared properly | Field inspection | | Periodic | 1 | |
| **1705.11.1 Structural Steel Special Inspections for Seismic Resistance** | | | | | |
| 1. Fabricator and erector documents (Verify reports and certificates as listed in AISC 341-10,Section J2 for compliance with construction documents) | Submittal Review | | Each submittal | 3,4 | |
| 2. Structural steel welding: | | | | | |
| a. Inspection tasks Prior to, During and After Welding (Observe, or perform for each welded joint or member, the QA tasks listed in AISC 341-10, Table J6-1, J2 & J6.5) | Shop (3) and field inspection | | Observe or Perform as | 2 | |
| b. Nondestructive testing (NDT) of welded joints in accordance with AISC 341-10, Section J6.2 | Shop (3) and field testing | | Periodic | 2 | |
| 3. Structural steel bolting: | | | | | |
| a. Inspection tasks Prior to, During and After Bolting (Observe, or perform tasks for each bolted connection, in accordance with QA tasks listed in AISC 341-10 Table J7-1, J7-2 & J7-3) | Shop (3) and field inspection | | Observe or Perform as noted (4); | 2 | |
| a. Protected zones | Shop (3) and field inspection | | Observe (4) | 2,4 | |
| **1705.11.6 Designated Seismic System Verification** | | | | | |
| Repair and verify that that the component label, anchorage or mounting conforms to the certificate of compliance in accordance with 1705.12.3 | Field inspection | | Periodic | 3,5,6 | |
| 1. Architectural Designated Seismic Systems (per ASCE 7-10) | | | | | |
| a. Interior non-structural partition walls and connections | Field Inspection | | Periodic | 3 | |
| b. Exterior non-structural walls elements and connections | Field Inspection | | Periodic | 3 | |
| c. Veneer | Field Inspection | | Periodic | 3 | |
| d. Suspended Ceiling Systems | Field Inspection | | Periodic | 3 | |
| e. Cabinets | Field Inspection | | Periodic | 3 | |
| f. Storefront and curtainwall framing | Field Inspection | | Periodic | 3 | |
| g. Glass in glazed interior and exterior storefront and curtainwall systems | Field Inspection | | Periodic | 3 | |
| 2. Mechanical & Electrical Designated Seismic Systems (per ASCE 7-10) | | | | | |
| a. Mechanical and Electrical Components | | | | | |
| 1) An-side HVAC fans, air handlers, air conditioning units, air distribution boxes, and other mechanical components constructed of sheet metal | Field Inspection | | Periodic | 3,5 | |
| 2) Wet side HVAC, boilers, furnaces, atmospheric tanks and bins, shifters, water heaters, heat exchangers, air separators, manufacturing or process equipment and other mechanical components constructed of high-deformability materials | Field Inspection | | Periodic | 3,5 | |
| 3) Motor control centers, panel boards, switch gear, heat-ventilation cabinets, and other components constructed of sheet metal framing | Field Inspection | | Periodic | 5 | |
| 4) Communication equipment, computers, instrumentation and controls | Field Inspection | | Periodic | 3,5 | |
| 5) Light fixtures | Field Inspection | | Periodic | 3,5 | |
| b. Vibration Isolated Components & Systems | | | | | |
| 1) Components and systems isolated using neoprene elements and neoprene isolated floors with built-in or separate elastomeric snubbing devices or resilial perimeter stops | Field Inspection | | Periodic | 3,5 | |
| 2) Spring isolated components and systems closely restrained using built in or separate elastomeric snubbing devices or resilient perimeter stops | Field Inspection | | Periodic | 3,5 | |
| 3) Internally isolated systems and supports | Field Inspection | | Periodic | 3,5 | |
| 4) Suspended vibration isolation equipment including in-line duct devices and suspended internally isolated components | Field Inspection | | Periodic | 3,5 | |
| c. Distribution Systems | | | | | |
| 1) Piping and tubing including in-line components | Field Inspection | | Periodic | 3,5 | |
| 2) HVAC ducts and in-line components | Field Inspection | | Periodic | 3,5 | |
| 3) Electrical conduit and cable trays | Field Inspection | | Periodic | 3,5 | |
| 4) Bus ducts | | | | 3,5 | |
| 5) Plumbing | Field Inspection | | Periodic | 3,5 | |
| 6) Fire Protection Sprinkler Pipe System | Field Inspection | | Periodic | 3,5 | |
| **1705.11.8 Architectural Components Special Inspections for Seismic Resistance** | | | | | |
| 1. Inspection during the erection and fastening of exterior cladding and interior and exterior veneer. | Field Inspection | | Periodic | 3 | |
| 2. Inspection during the erection and fastening of interior and exterior non load bearing walls. | Field inspection | | Periodic | 3 | |
| **1705.11.8 Mechanical and Electrical Components Special Inspections for Seismic Resistance** | | | | | |
| 1. Inspection during the anchorage of electrical equipment for emergency or standby power systems. | Field inspection | | Periodic | 3,5 | |
| 2. Inspection during the anchorage of other electrical equipment. | Field Inspection | | Periodic | 3,5 | |
| 3. Inspection during the installation and anchorage of vibration isolation systems. | Field inspection | | Periodic | 3,5 | |
| **1705.12.1 Concrete Reinforcement Testing and Qualification for Seismic Resistance** | | | | | |
| Review certified mill test reports | Field review | | Each shipment | 3,4 | |
| **1705.12.3 Seismic Certification of Nonstructural Components** | | | | | |
| Review certificate of compliance for designated seismic system components. | Certificate of compliance review | | Each submittal | 3,5,6 | |

| * INSPECTION AGENTS | FIRM |
|---|---|
| 1. TESTING AGENCY | GEOTECHNICAL ENGINEER |
| 2. TESTING AGENCY | TO BE SELECTED |
| 3. ARCHITECT | BRACKETT KRENNERICH |
| 4. STRUCTURAL ENGINEER | STRUCTURAL ENGINEER OF RECORD |
| 5. MECHANICAL ENGINEER | MECHANICAL ENGINEER OF RECORD |
| 6. ELECTRICAL ENGINEER | ELECTRICAL ENGINEER OF RECORD |
| 7. STEEL FABRICATOR | TO BE SELECTED |

Notes: 1. *The Inspection and testing agent(s) shall be engaged by the Owner or the Owner's Agent, and not by the Contractor or Subcontractor whose work is to be inspected or tested. The Owner or the Owner's Agent shall notify the Building Official and the Design Professional of the identities of the Special Inspector(s) and/or testing agencies are subject to the approval of the Building Official and/or the Design Professional.*
2. *The list of Special Inspectors may be submitted as a separate document, if noted as above.*
3. *Prior to commencement of work listed in this schedule, the Special Inspector shall be approved in accordance with IBC Section 1704.2.5.2*
4. *Observe on a random basis, operations need not be delayed pending these inspections. Perform these tests for each welded joint, socket connection, or stud element.*
5. *NDT of welds completed in an approved fabricator's shop may be performed by that fabricator when approved by the AHJ. Refer to AISC 360, N7.*

**Circle "Yes" or "No" as appropriate and date this document below:**
*Are Special Inspections required included in the Statement of Special Inspections?* — Yes / No
*Are Requirements for Torsion Resistance included in the Statement of Special Inspections?* — Yes / No

DATE: 5-Apr-21

## INDEX TO DRAWINGS



I HEREBY CERTIFY THAT THESE PLANS & SPECIFICATIONS HAVE BEEN PREPARED BY ME, OR UNDER MY DIRECT SUPERVISION. I CERTIFY THAT TO THE BEST OF MY KNOWLEDGE, THESE PLANS & SPECIFICATIONS ARE AS REQUIRED BY LAW & IN COMPLIANCE WITH THE ARKANSAS FIRE PREVENTION CODE FOR THE STATE OF ARKANSAS.

Todd S. Welch

BRACKETT KRENNERICH & ASSOCIATES P.A. — REGISTERED ARCHITECTS — C13 — 26 JULY 2024 — ARKANSAS

SET NUMBER

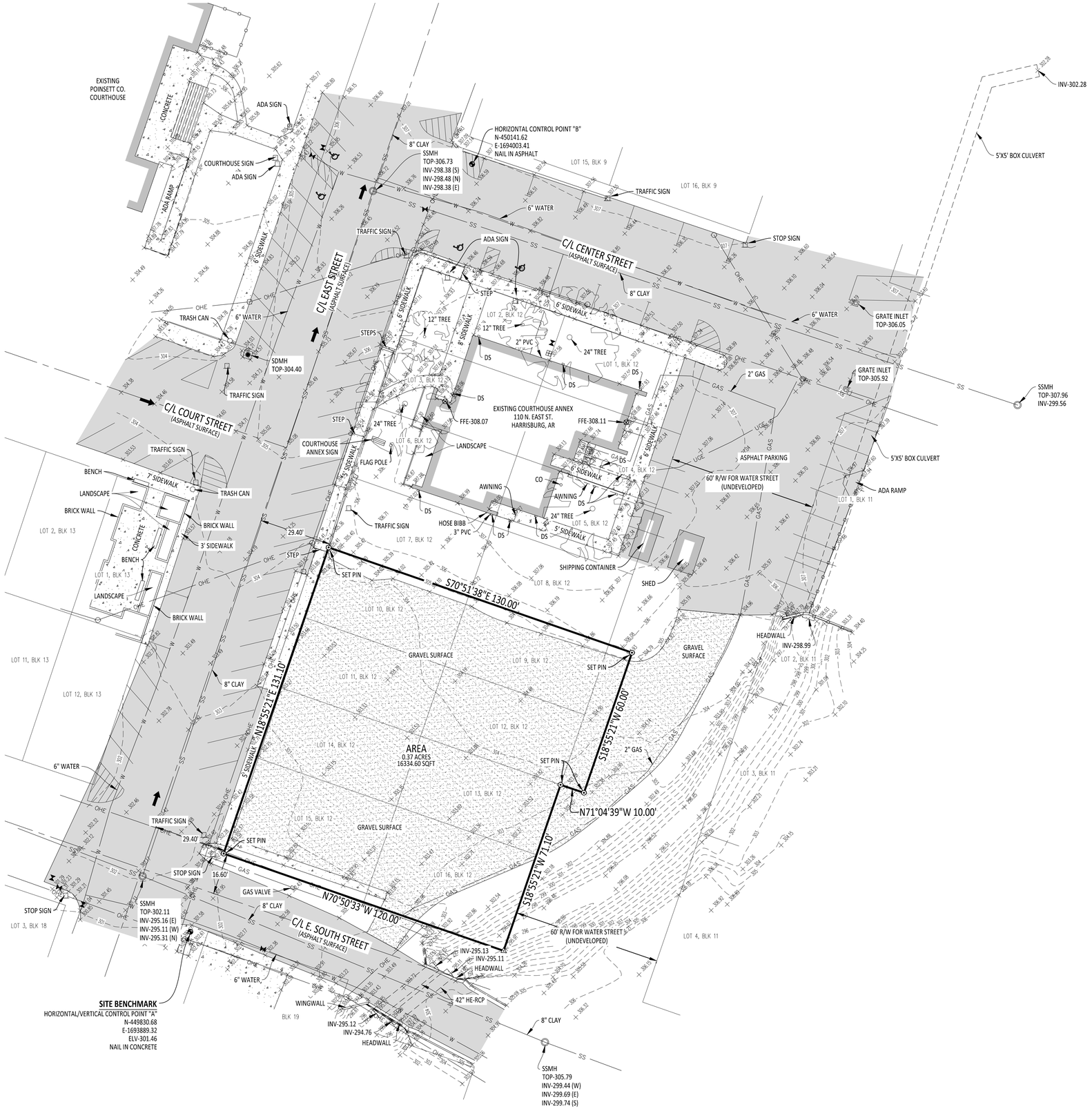



VICINITY MAP
NOT TO SCALE

## RECORD DESCRIPTION:

WARRANTY DEED - 2022R-02065:
LOTS 9, 10, 11, 12, 13, 14, 15 & 16 IN BLOCK 12 OF THE ORIGINAL SURVEY OF THE CITY OF HARRISBURG, ARKANSAS; AND THAT PORTION OF WATER STREET LYING EAST OF AND ADJACENT TO THE EAST LINE OF LOTS 9 AND 12 IN BLOCK 12 OF THE ORIGINAL SURVEY OF THE CITY OF HARRISBURG, ARKANSAS, BEING A STRIP OF LAND 10 FEET IN WIDTH - EAST AND WEST AND 60 FEET IN LENGTH - NORTH AND SOUTH.

## CERTIFICATE OF SURVEY:

TO ALL PARTIES INTERESTED IN TITLE TO THESE PREMISES: I HEREBY CERTIFY THAT I HAVE PRIOR TO THIS DAY MADE A SURVEY OF THE ABOVE DESCRIBED PROPERTY AS SHOWN ON THE PLAT OF SURVEY HEREON. THE PROPERTY LINES AND CORNER MONUMENTS, TO THE BEST OF MY KNOWLEDGE AND ABILITY, ARE CORRECTLY ESTABLISHED: THE IMPROVEMENTS ARE AS SHOWN ON THE PLAT OF SURVEY. ENCROACHMENTS, IF ANY, AS DISCLOSED BY SURVEY, ARE SHOWN HEREON.

## SURVEYOR NOTES:

1) BASIS OF BEARINGS: GPS OBSERVATIONS (ARKANSAS NORTH STATE PLANE COORDINATE SYSTEM)
2) THE RESEARCH COMPLETED FOR THIS SURVEY INCLUDES:
   - SITE MAP PROVIDED BY CLIENT.
   - WARRNTY DEED (DOCUMENT NO. 2022R-02065
   - PLAT OF ORIGINAL SURVEY CITY OF HARRISBURG
3) ALL CORNER MONUMENTS SET ARE ½" REBAR, UNLESS NOTED OTHERWISE ON THE PLAT.
4) OWNER: POINSETT COUNTY
5) THIS TRACT DOES LIE WITHIN THE 100-YR SPECIAL FLOOD HAZARD AREA PER FLOOD INSURANCE RATE MAP OF POINSETT CO., AR, AND INCORPORATED AREAS, MAP NO. 05111C0275D WITH AN EFFECTIVE DATE OF 02/04/11.
6) THE SURVEYOR HAS MADE NO INVESTIGATION OR INDEPENDENT SEARCH FOR EASEMENTS OF RECORD OR ANY OTHER FACTS WHICH AN ACCURATE TITLE SEARCH MAY DISCLOSE.
7) CURRENT ZONING: C-1 (SETBACKS REQUIREMENTS: 0' STREET & SIDE; & 10' REAR)
8) ALL UTILITIES SHOWN ARE BASED UPON OBSERVED EVIDENCE TOGETHER WITH 811 UTILITY LOCATION SERVICES TICKET NO. 230623-0630.
9) HORIZON LAND SURVEYING, LLC HOLDS NO LIABILITY TO THE LOCATION OF UTILITIES ILLUSTRATED OR NOT ILLUSTRATED UPON THIS SURVEY. IT SHALL BE THE RESPONSIBILITY OF THE OWNER OR CONTRACTOR TO VERIFY ALL UTILITIES PRIOR TO ANY CONSTRUCTION OR EARTH MOVING WORK.
10) HORIZONTAL/VERTICAL CONTROL POINT "A" AS DEPICTED ON THIS SURVEY IS A NAIL IN CONCRETE.
HORIZONTAL CONTROL POINT "B" AS DEPICTED ON THIS SURVEY IS A NAIL IN ASPHALT.
SITE BENCHMARK ELEVATION IS 301.46 AND IS LOCATED SOUTHEAST 30 FT. IN CONCRETE SIDEWALK FROM EXISTING SEWER MANHOLE AT INTERSECTION OF E. SOUTH ST. AND EAST ST.

## LEGEND:

- FOUND MONUMENT (AS NOTED)
- SET MONUMENT (AS NOTED)
- COMPUTED POINT
- SECTION CORNER
- WATER METER (WM)
- FIRE HYDRANT (FH)
- WATER VALVE
- UTILITY POLE
- TELEPHONE PEDESTAL (TP)
- SANITARY SEWER MANHOLE (SSMH)
- STORM DRAIN MANHOLE (SDMH)
- GRATE DRAIN INLET (GI)
- ELECTRIC TRANSFORMER
- ELECTRIC BOX/METER
- LIGHT POLE
- CLEANOUT (CO)
- SIGN
- GAS METER (GM)
- UGE — UNDERGROUND ELECTRIC (UGE)
- OHE — OVERHEAD ELECTRIC (OHE)
- WOOD FENCE
- CHAIN LINK FENCE
- SS — SEWER
- W — WATER
- GAS — GAS
- T — TELEPHONE

20 10 0 20
SCALE 1" = 20'

811 Know what's below. Call before you dig.


Horizon LAND SURVEYING, LLC
PHONE: 870-243-0092
2918 WOOD STREET, JONESBORO, AR 72404


PROJECT:
POINSETT CO., AR COURTHOUSE ANNEX
HARRISBURG, AR

CLIENT:
BRACKETT-KRENNERICH & ASSOCIATES, P.A.

CERTIFICATE OF AUTHORIZATION
HORIZON LAND SURVEYING, LLC
No. 3472
ARKANSAS

REGISTERED PROFESSIONAL SURVEYOR
STATE OF ARKANSAS
P.S. 1590
SIGNATURE
DANNY R. BURNS
07/13/2023

| REVISIONS | | |
|---|---|---|
| DATE | BY | DESCRIPTION |
| | | |
| | | |
| | | |
| | | |
| | | |

| DRAWING INFO. | |
|---|---|
| DRAWN BY: | DRB |
| DATE: | 07/13/2023 |
| SCALE: | 1"=20' |
| JOB NO.: | H23-064 |
| CAD NO.: | |

BOUNDARY/
TOPOGRAPHIC SURVEY

SHEET NUMBER:
1 of 1

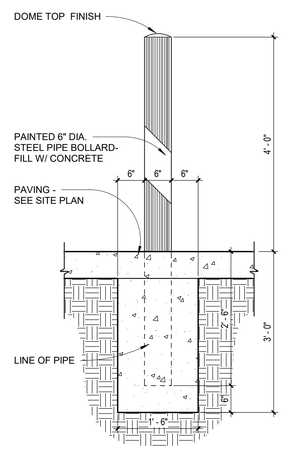


**4 bollard detail**
SCALE: 3/4" = 1'-0"

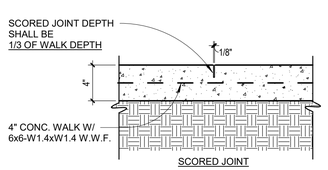


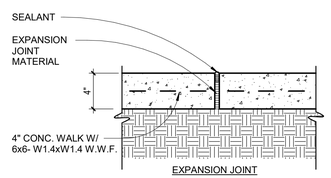


**3 walk details**
SCALE: 1 1/2" = 1'-0"

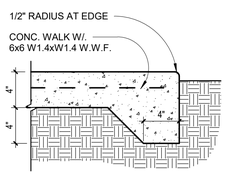


**2 walk edge detail**
SCALE: 1 1/2" = 1'-0"

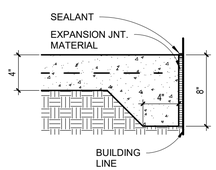


**1 edge of building**
SCALE: 1 1/2" = 1'-0"

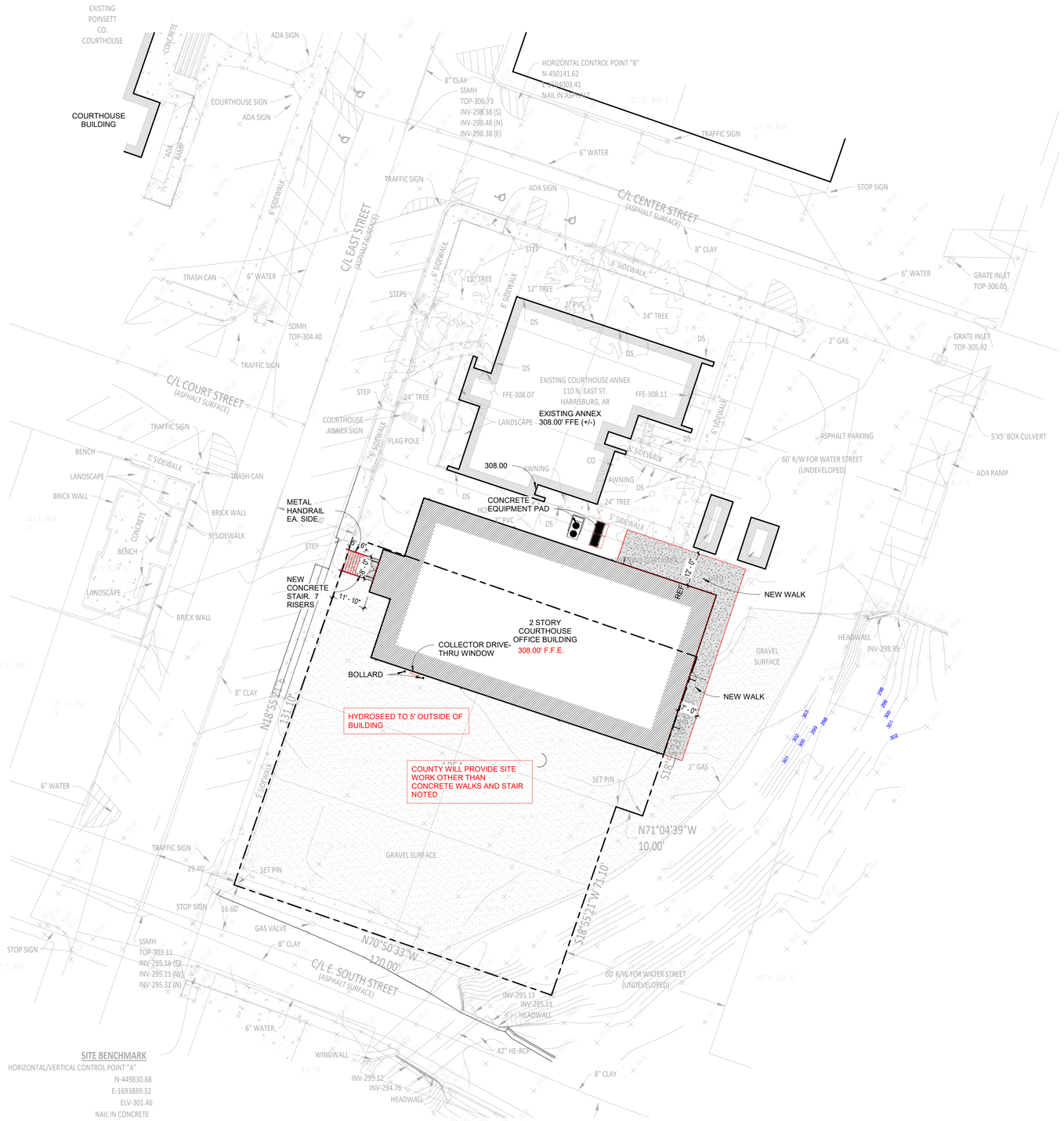


**n site plan**
SCALE: 1" = 20'-0"

# POINSETT COUNTY COURTHOUSE ANNEX
# POINSETT COUNTY
## Harrisburg, Arkansas

BRACKETT KRENNERICH architects

100 East Huntington Ave. Suite D P.O. Box 1655 870-932-0571 Fax 870-932-0975 www.bkarchts.com

| Revision Schedule | | | |
|---|---|---|---|
| Tag | Rev. Description | Rev. Date | Issued by |

BRACKETT & KRENNERICH & ASSOCIATES, P.A.
REGISTERED ARCHITECTS
C13
26 JULY 2024
ARKANSAS

Commission Number
2237

C001

Date: July 26, 2024

SITE PLAN

C:\Users\toddw\Documents\2237 Poinsett Annex CD 07-31-24 Central_toddwch.rvt
8/7/2024 8:17:42 AM

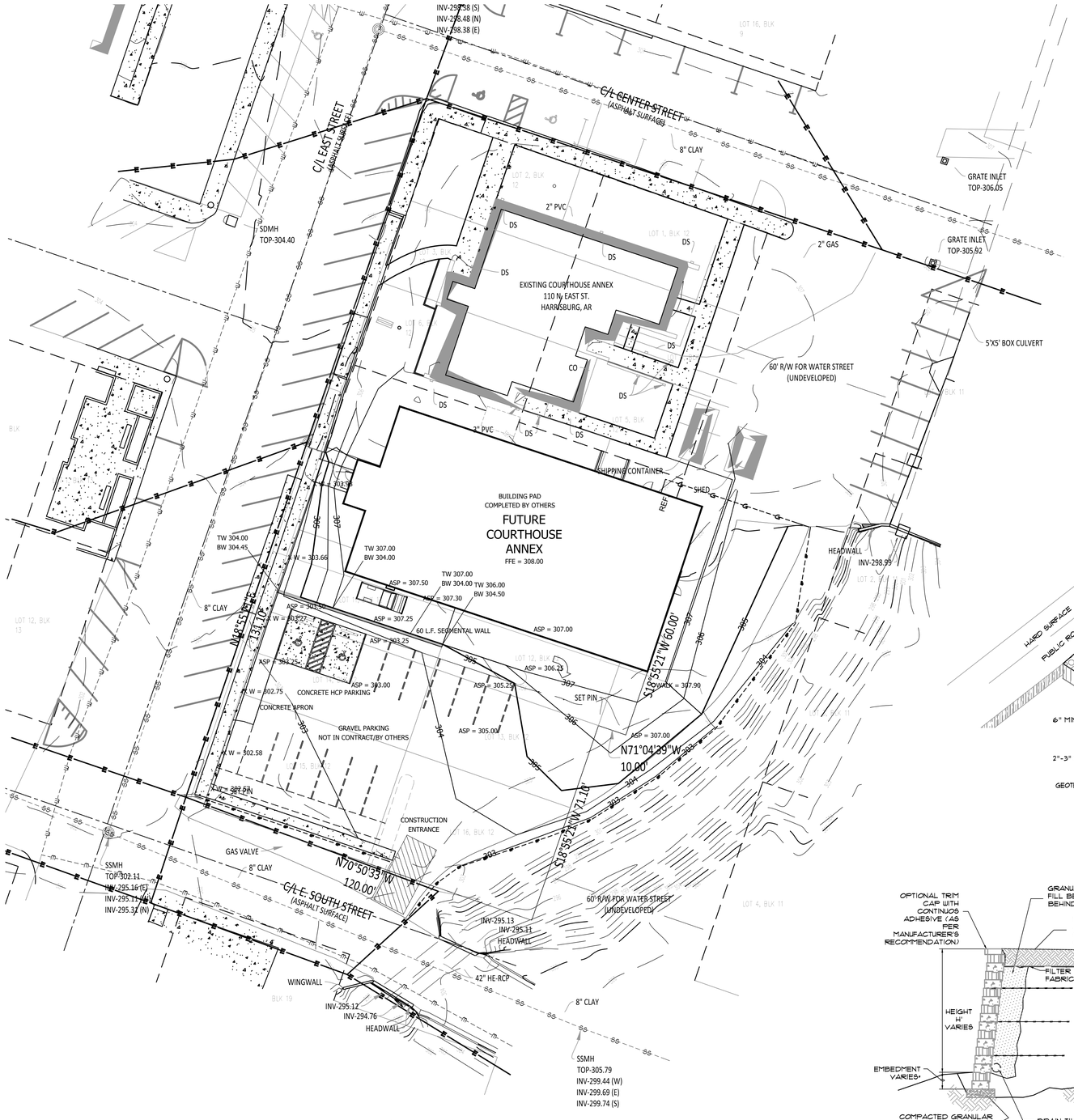


## LEGEND

| | |
|---|---|
| SF | SILT FENCE |
| | CONSTRUCTION ENTRANCE |
| | INLET PROTECTION |
| | DUMPED RIPRAP |

BEARING BASIS
(STATE PLANE COORDINATES ARKANSAS NORTH ZONE)

20' 10' 0' 20'

GRAPHIC SCALE
IN FEET

## GRADING NOTES

1. ALL DIMENSIONS ARE TO THE FACE OF CURB, UNLESS OTHERWISE NOTED.
2. ALL CURB RETURN RADII SHALL BE 5' UNLESS OTHERWISE NOTED.
3. PROJECT SITE IS CURRENTLY VACANT.
4. THROUGHOUT ALL EXCAVATION ACTIVITIES, POSITIVE DRAINAGE SHALL BE MAINTAINED WITHIN MINIMUM SLOPES OF 0.50% OR GREATER AND SURFACE DRAINAGE GENERALLY IN THE DIRECTION PROVIDED BY EXISTING TOPOGRAPHY.
5. WORK SHALL PROGRESS IN SUCH A MANNER AS TO ALLOW THE EXISTING VEGETATION TO REMAIN AS LONG AS POSSIBLE, CONSISTENT WITH THE SCOPE OF WORK.
6. ALL ACCESSIBLE ROUTES SHALL HAVE A MAXIMUM CROSS SLOPE OF 2.0%. ALL ACCESSIBLE PARKING SPACES SHALL HAVE A MAXIMUM SLOPE OF 2.0% IN ALL DIRECTIONS.
7. REMOVE AND DISPOSE OF ALL DEBRIS AND OTHER MATERIAL AS SHOWN IN ACCORDANCE WITH ALL LOCAL, STATE AND/OR FEDERAL REGULATIONS.
8. ACCESS ALONG ROADWAY SHALL BE MAINTAINED AT ALL TIMES. CONSTRUCTION IN CITY, COUNTY OR STATE RIGHT OF WAY SHALL BE COORDINATED WITH THE RESPECTIVE AUTHORITY.
9. TAKE ALL PRECAUTIONS NECESSARY TO AVOID PROPERTY DAMAGE TO ADJACENT PROPERTIES. THE CONTRACTOR SHALL GIVE AFFECTED PROPERTY OWNERS SUFFICIENT NOTICE PRIOR TO CONSTRUCTION OPERATIONS.

## EROSION CONTROL MEASURES

1. THE PURPOSE OF THIS PLAN IS TO ESTABLISH MINIMUM EROSION CONTROL MEASURES. THIS PLAN IS NOT INTENDED TO COVER ALL MEASURES, BUT TO SUPPLEMENT, EXPAND OR IMPLEMENT THE REQUIREMENTS OF THE STATE OF ARKANSAS NATIONAL POLLUTION DISCHARGE ELIMINATION SYSTEM GENERAL PERMIT (NPDES PERMIT).
2. SILT FENCING SHALL BE PLACED ALONG THE LIMITS OF CONSTRUCTION AND AROUND EACH DRAINAGE STRUCTURE PRIOR TO CONSTRUCTION.
3. GRAVEL CONSTRUCTION ENTRANCES SHALL BE CONSTRUCTED AT PROPOSED DRIVEWAY LOCATIONS TO PREVENT TRANSPORT OF SEDIMENT OFF SITE. WHEEL WASH FACILITIES MAY BE REQUIRED.
4. THE CONTRACTOR SHALL BE RESPONSIBLE FOR INSTALLING ALL EROSION CONTROL MEASURES AND FACILITIES IN GOOD WORKING CONDITION THROUGHOUT THE ENTIRE CONSTRUCTION PERIOD. ANY FAILURES IN THE MEASURES MUST BE IMMEDIATELY REPAIRED. EROSION CONTROL MEASURES AND FACILITIES SHALL BE FREQUENTLY INSPECTED FOR COMPLIANCE. FAILURE TO INSTALL OR MAINTAIN THESE FACILITIES MAY RESULT IN DENIAL OF BUILDING INSPECTIONS UNTIL ALL PROBLEMS ARE CORRECTED. CONTRACTORS SHALL BE HELD ACCOUNTABLE FOR CONSTRUCTION VEHICLES TRACKING DIRT AND MUD ONTO PUBLIC STREETS. CONTRACTORS SHALL PUT INTO PLACE APPROPRIATE FACILITIES TO CLEAN VEHICLES BEFORE THEY ENTER STREETS. THE CONTRACTOR SHALL FREQUENTLY SWEEP THE ACCESS STREETS.
5. THE OWNER SHALL BE RESPONSIBLE FOR SUBMITTING A NOTICE OF INTENT WITH THE ARKANSAS DEPARTMENT OF ENVIRONMENTAL QUALITY (ADEQ).
6. DUST SHALL BE KEPT TO A MINIMUM. THE USE OF MOTOR OILS AND OTHER PETROLEUM BASED LIQUIDS FOR DUST SUPPRESSION ARE PROHIBITED.
7. ALL WORK ON THIS SITE PERTAINING TO EXCAVATION AND DRAINAGE SHALL BE IN ACCORDANCE WITH THIS PLAN AND THE APPLICABLE PROVISIONS OF THE CITY OF HARRISBURG STORM WATER MANAGEMENT REGULATIONS.
8. ADDITIONAL CONTROLS MAY BE REQUIRED BY THE CITY OF HARRISBURG AND ADEQ DURING CONSTRUCTION. GUIDELINES ESTABLISHED BY THE SOIL CONSERVATION SERVICE MAY BE REQUIRED FOR SEEDING OPERATIONS IF DETERMINED NECESSARY.

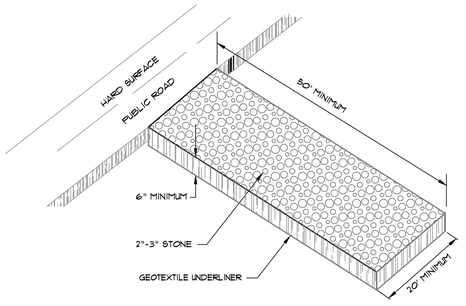


CONSTRUCTION ENTRANCE
NOT TO SCALE

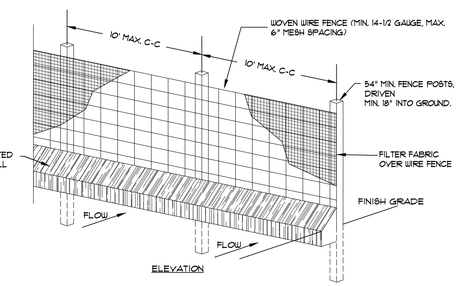


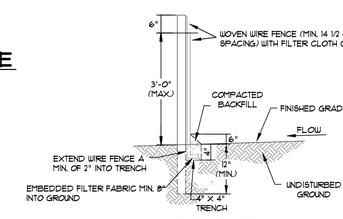


POSTS: STEEL EITHER T OR U TYPE OR 2"X2" HARDWOOD
FENCE: WOVEN WIRE, 14-1/2 GA. 6" MAX. MESH OPENING
FILTER FABRIC:
1. MIRAFI 140N5
2. PHILLIPS 66 SUPAC 4NP
3. DUPONT TYPAR 3341
4. OR APPROVED EQUAL.

1. WOVEN WIRE FENCE TO BE FASTENED SECURELY TO FENCE POSTS WITH WIRE TIES OR STAPLES.
2. FILTER CLOTH TO BE FASTENED SECURELY TO WOVEN WIRE FENCE WITH TIES SPACED EVERY 24" AT TOP AND MID SECTION.
3. WHEN TWO SECTIONS OF FILTER CLOTH ADJOIN EACH OTHER THEY SHALL BE OVERLAPPED BY SIX INCHES AND FOLDED.
4. MAINTENANCE SHALL BE PERFORMED AS NOTED IN THE EROSION CONTROL PLAN. COLLECTED MATERIAL SHALL BE REMOVED WHEN "BULGES" DEVELOP IN THE SILT FENCE.

SILT FENCE
NOT TO SCALE

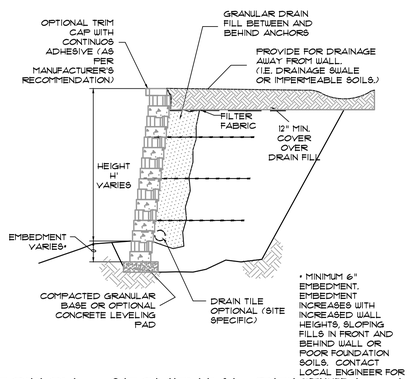


SECTION - SEGMENTAL RETAINING WALL
N.T.S.

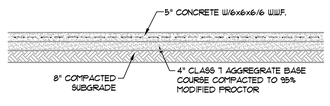


SECTION - CONCRETE PAVING - LIGHT
N.T.S.

n

# grading and erosion plan

SCALE: 1" = 20'-0"

CERTIFICATE OF AUTHORIZATION
ASSOCIATED ENGINEERING AND TESTING, LLC
No. 299
ARKANSAS ENGINEER

STATE OF ARKANSAS
REGISTERED PROFESSIONAL ENGINEER
No. 9815
JOHN M. ERSLEY

811
Know what's below.
Call before you dig.

POINSETT COUNTY COURT ANNEX

# POINSETT COUNTY

Harrisburg, Arkansas

BRACKETT KRENNERICH architects

100 East Huntington Ave. Suite D P.O. Box 14655 870-932-0571 Fax 870-932-0975 www.bkarchts.com

| Revision Schedule | | | | |
|---|---|---|---|---|
| Tag | Rev. Description | Rev. Date | Issued by | |

Commission Number
2237

C002

Date: July 26, 2024

GRADING/EROSION PLAN

D:\Katie\Documents\2237 Poinsett Annex DD 05-27-24 CENTRAL_katieH4M4R.rvt
6/5/2024 8:41:24 AM

# PLUMBING FIXTURE ANALYSIS

| MINIMUM NUMBER OF REQUIRED PLUMBING FIXTURES | | REQUIRED # OF FIXTURES | FIXTURES PROVIDED |
|---|---|---|---|
| **FIRST FLOOR** | | | |
| WATER CLOSETS | | | |
| MALE | 1 PER 150 | 2 WATER CLOSETS | 2 URINALS<br>1 WATER CLOSET |
| FEMALE | 1 PER 75 | 3 WATER CLOSETS | 4 WATER CLOSETS |
| LAVATORIES | | | |
| MALE | 1 PER 200 | 2 LAVATORIES | 2 LAVATORIES |
| FEMALE | 1 PER 200 | 2 LAVATORIES | 3 LAVATORIES |
| DRINKING FOUNTAINS | | | |
| 1 PER 1,000 | | 1 DRINKING FOUNTAINS | 2 DRINKING FOUNTAINS |
| OTHER | | | |
| 1 SERVICE SINK | | 1 SERVICE SINK | 1 SERVICE SINK |
| **SECOND FLOOR** | | | |
| WATER CLOSETS | | | |
| MALE | 1 PER 150 | 2 WATER CLOSETS | 2 URINALS<br>1 WATER CLOSET |
| FEMALE | 1 PER 75 | 4 WATER CLOSETS | 4 WATER CLOSETS<br>*1 WATER CLOSET PROVIDED AT FAMILY RESTROOM LOCATED ON FIRST FLOOR* |
| LAVATORIES | | | |
| MALE | 1 PER 200 | 2 LAVATORIES | 2 LAVATORIES |
| FEMALE | 1 PER 200 | 2 LAVATORIES | 3 LAVATORIES<br>*1 LAVATORY PROVIDED AT FAMILY RESTROOM LOCATED ON FIRST FLOOR* |
| DRINKING FOUNTAINS | | | |
| 1 PER 1,000 | | 1 DRINKING FOUNTAINS | 2 DRINKING FOUNTAINS |
| OTHER | | | |
| 1 SERVICE SINK | | 1 SERVICE SINK | 1 SERVICE SINK |

# CODE ANALYSIS

## APPLICABLE CODES

ARKANSAS FIRE PREVENTION CODE, 2021 VOLUMES 1 & 2
2018 ARKANSAS PLUMBING CODE
2021 ARKANSAS MECHANICAL CODE
2020 NATIONAL ELECTRICAL CODE
2018 INTERNATIONAL FUEL AND GAS CODES
2014 ARKANSAS ENERGY CODE
2003 ICC/ANSI A117.1 AMERICAN NATIONAL STANDARDS
A.C.A. 12-80-101 ET.SEQ. (ARKANSAS STATE LAW)

## BUILDING DATA

| | |
|---|---|
| Primary Occupancy Type | Group B, Business |
| Other Occupancy Type | Group A, Assembly |
| New Building Area | 12,604 square feet |
| **Total Gross Building Area** | **12,604 square feet** |
| **Floor Area Per Story** | |
| First Floor (Total Area) | 6,357 square feet |
| New | *6,357 square feet* |
| Second Floor (Total Area) | 6,247 square feet |
| New | *6,247 square feet* |
| Building Height | 20'-6" |
| Number of Stories | Two (2) |
| Type of Construction | TYPE V-B (FULLY SPRINKLERED) |
| Allowable Height (Table 503) | 60'-0" |
| Allowable Area (Table 503, Section 506) | 27,000 square feet |
| Stories Allowed (Table 503) | Three (3) |
| Building Setbacks | |
| North | Closest structure or property line is 12'-0" |
| East | Closest structure or property line is greater than 30'-0" |
| South | Closest structure or property line is greater than 30'-0" |
| West | Closest structure or property line is greater than 30'-0" |

## STRUCTURAL DATA

SEISMIC DESIGN REQUIREMENTS
Seismic Zone 3
Site Class D
Seismic Design Category D

SPECIAL INSPECTIONS — Section 1704

## EGRESS

| | |
|---|---|
| Maximum common path of egress travel distance | |
| Business | 100'-0" |
| Exit access travel distance | |
| Business | 300'-0" |
| Dead end corridor distance | |
| Business | 50'-0" |
| Minimum door size | 36" (ADA) |
| Egress width per occupant | |
| Stairways | .2 inches |
| Other egress components | .15 inches |
| Minimum number of exits | Two (3) |

## FIRE PROTECTION

| | | |
|---|---|---|
| Sprinkler system | Provided | Section 903 |
| Fire Alarm | Provided | Section 907.2 |
| Smoke Alarm | Provided | Section 907 |
| **TYPICAL ASSEMBLIES** | | |
| CORRIDOR RATING | 0 HOUR | Table 1018.1 |
| PRIMARY STRUCTURAL FRAME | 0 HOUR | Table 601 |
| BEARING WALLS | | |
| Exterior Walls | 0 HOUR | Table 601 |
| Interior Walls | 0 HOUR | Table 601 |
| NON-BEARING WALLS | | |
| Exterior Walls | 0 HOUR | Table 602 |
| Interior Walls | 0 HOUR | Table 601 |
| FLOOR / CEILING ASSEMBLY | 0 HOUR | Table 601, Section 508.3, 508.4 |
| ROOF / CEILING ASSEMBLY | 0 HOUR | Table 601 |

## BUILDING OCCUPANCY

OCCUPANCY LOAD

*SEE LIFE SAFETY PLAN FOR ROOM OCCUPANCY LOAD*

| | |
|---|---|
| FIRST FLOOR | 232 |
| SECOND FLOOR | 21 |
| TOTAL OCCUPANCY | 253 |

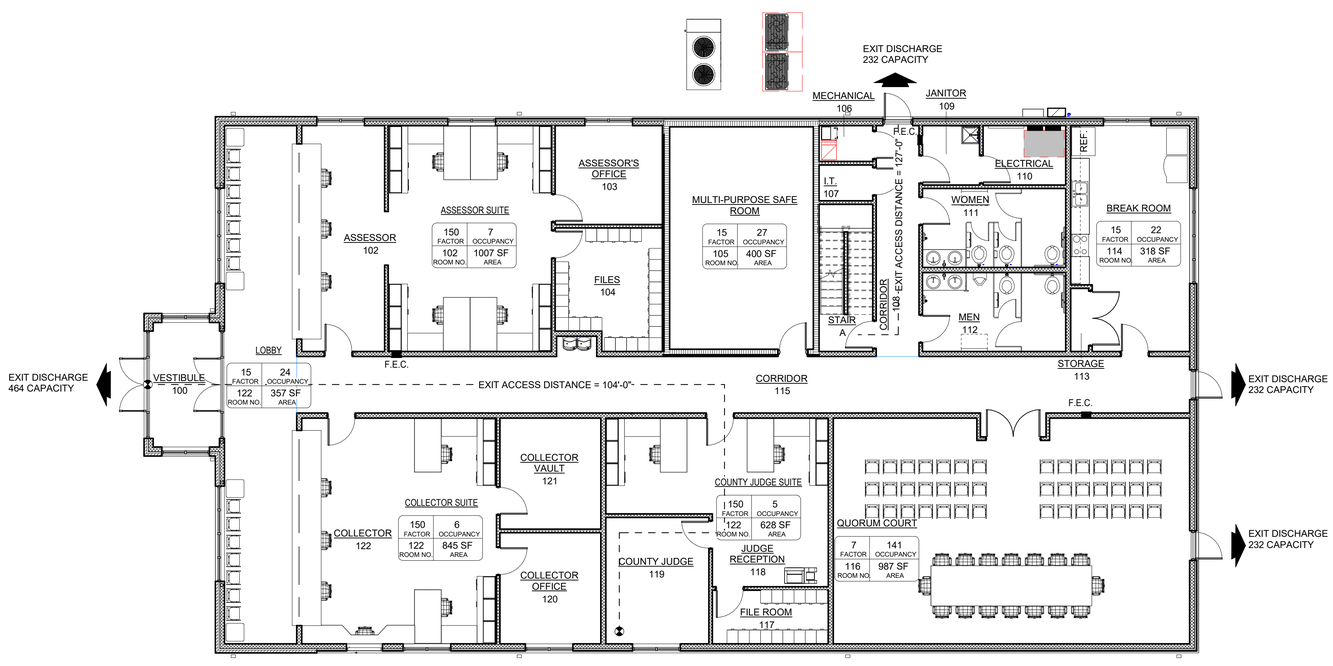


## LIFE SAFETY LEGEND

- COMMON PATH OF EGRESS
- EXIT ACCESS TRAVEL PATH
- 0'-0" — DISTANCE BETWEEN WAY POINTS
- WAY POINT
- F.E. — FIRE EXTINGUISER
- F.E.C. — FIRE EXTINGUISER CABINET
- EXIT DISCHARGE
- XXX — EXIT CAPACITY
- EGRESS
- XXX — EGRESS CAPACITY
- EXIT STAIRWAY
- XXX — STAIR CAPACITY
- EXIT ACCESS STAIRWAY
- XXX — STAIR CAPACITY
- FIRE ALARM PULL STATION

TRUE NORTH — BUILDING NORTH

# first floor life safety plan

SCALE: 1/8" = 1'-0"

POINSETT COUNTY COURTHOUSE ANNEX

**POINSETT COUNTY**

**Harrisburg, Arkansas**


BRACKETT KRENNERICH architects
100 East Huntington Ave. Suite D P.O. Box 1655
870-932-0571 Fax 870-932-0975
www.bkarchts.com


Revision Schedule

| Tag | Rev. Description | Rev. Date | Issued by |
|---|---|---|---|

BRACKETT-KRENNERICH & ASSOCIATES, P.A.
REGISTERED ARCHITECTS
C13
26 JULY 2024
ARKANSAS

Commission Number
2237

LS001

Date: July 26, 2024

LIFE SAFETY PLAN - FIRST FLOOR, CODE ANALYSIS

C:\Users\toddw\Documents\2237 Poinsett Annex CD 07-31-24
central_toddw_bkarch.rvt
8/7/2024 8:14:35 AM

## LIFE SAFETY LEGEND

| | |
|---|---|
| | COMMON PATH OF EGRESS |
| | EXIT ACCESS TRAVEL PATH |
| 0'-0" | DISTANCE BETWEEN WAY POINTS |
| | WAY POINT |
| F.E. | FIRE EXTINGUISER |
| F.E.C. | FIRE EXTINGUISER CABINET |
| | EXIT DISCHARGE |
| XXX | EXIT CAPACITY |
| | EGRESS |
| XXX | EGRESS CAPACITY |
| | EXIT STAIRWAY |
| XXX | STAIR CAPACITY |
| | EXIT ACCESS STAIRWAY |
| XXX | STAIR CAPACITY |
| | FIRE ALARM PULL STATION |

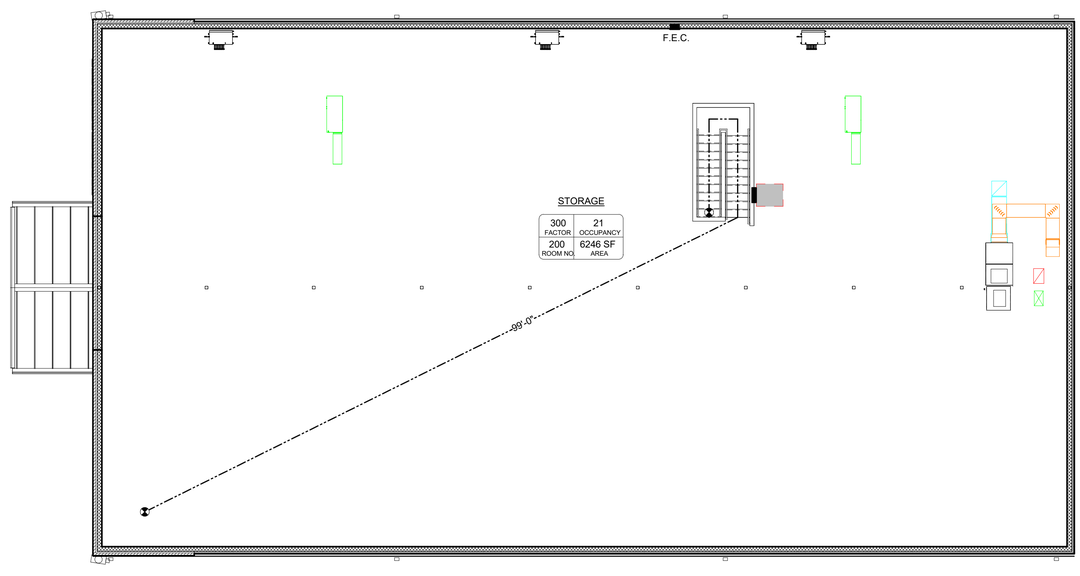


TRUE NORTH  BUILDING NORTH

# second floor life safety plan

SCALE: 1/8" = 1'-0"

POINSETT COUNTY COURTHOUSE ANNEX

# POINSETT COUNTY

Harrisburg, Arkansas

BRACKETT KRENNERICH architects

100 East Huntington Ave. Suite D P.O. Box 1655  870-932-0571  Fax 870-932-0975  www.bkarchts.com

| Revision Schedule | | | |
|---|---|---|---|
| Tag | Rev. Description | Rev. Date | Issued by |

BRACKETT KRENNERICH & ASSOCIATES, P.A. REGISTERED ARCHITECTS C13 26 JULY 2024 ARKANSAS

Commission Number 2237

LS002

Date: July 26, 2024

LIFE SAFETY PLAN - SECOND FLOOR

C:\Users\toddw\Documents\2237 Poinsett Annex CD 07-31-24 central_toddwarch.rvt
8/7/2024 8:14:36 AM

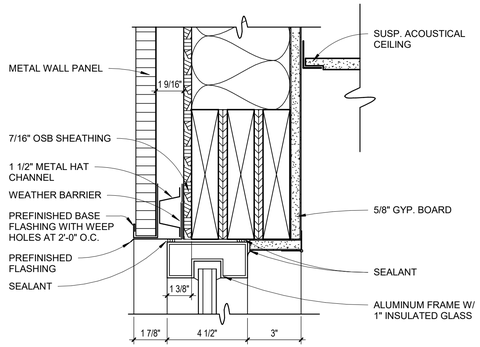


## 4 head detail
SCALE: 3" = 1'-0"

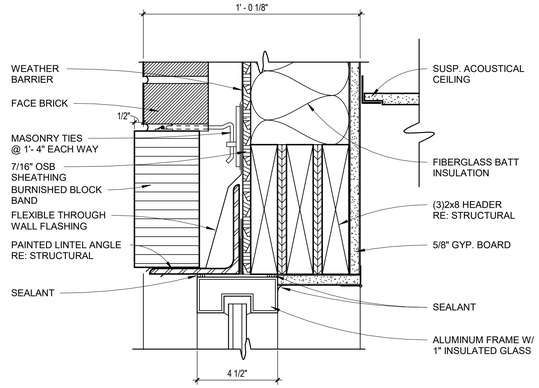


## 1 head detail
SCALE: 3" = 1'-0"

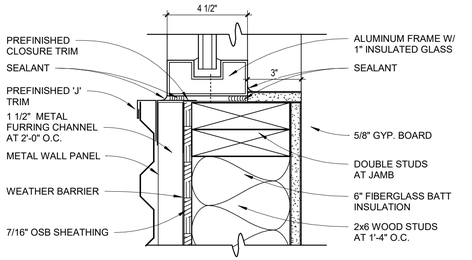


## 5 jamb detail
SCALE: 3" = 1'-0"

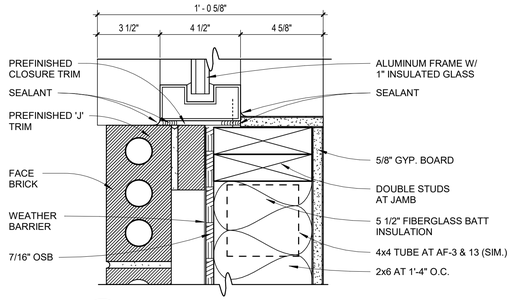


## 2 jamb detail
SCALE: 3" = 1'-0"

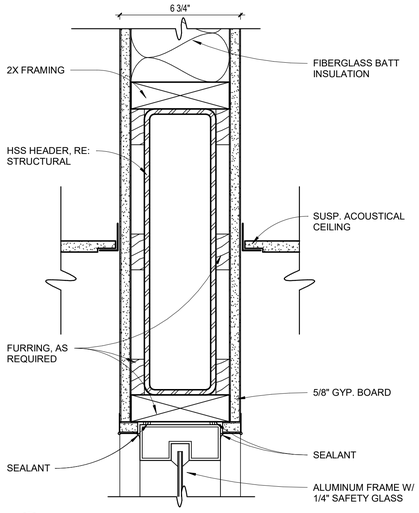


## 6 head detail
SCALE: 3" = 1'-0"

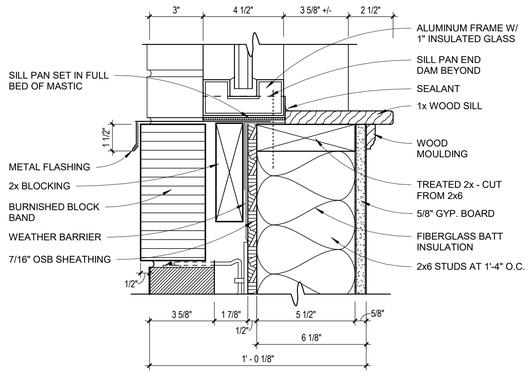


## 3 sill detail
SCALE: 3" = 1'-0"

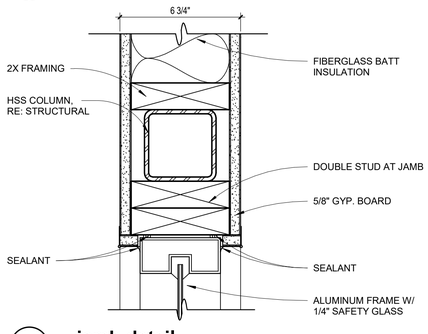


## 7 jamb detail
SCALE: 3" = 1'-0"

| DOOR SCHEDULE - FIRST FLOOR | | | | | | | | | | |
|---|---|---|---|---|---|---|---|---|---|---|
| Door Number | DOOR | | | | DETAILS | | | Label | HDWE | Remarks |
| | Type | Style | Threshold | Frame | Head | Jamb | Sill | | | |
| 100 | A | PAIR | ALUM | AF-1 | 1/A001 | 2/A001 | 3/A002 | --- | 1 | ADA BUTTON |
| 101 | B | PAIR | --- | AF-2 | 6/A001 | 7/A001 | --- | --- | 2 | ADA BUTTON |
| 102 | C | SINGLE | --- | HMF-2 | 4/A002 | 5/A002 | --- | --- | 7 | |
| 103 | C | SINGLE | --- | HMF-2 | 6/A002 | 7/A002 | --- | --- | 8 | |
| 104 | C | SINGLE | --- | HMF-2 | 6/A002 | 7/A002 | --- | --- | 5 | |
| 105 | E | SINGLE | --- | HMF-1 | 8/A002 | 9/A002 | --- | --- | 9 | |
| 106 | C | SINGLE | --- | HMF-2 | 6/A002 | 7/A002 | --- | --- | 5 | |
| 107 | C | SINGLE | --- | HMF-2 | 6/A002 | 7/A002 | --- | --- | 5 | |
| 108.1 | E | SINGLE | ALUM | HMF-2 | 1/A002 | 2/A002 | 3/A002 | --- | 4 | |
| 108.2 | C | SINGLE | --- | HMF-2 | 6/A002 | 7/A002 | --- | --- | 5 | |
| 109 | C | SINGLE | --- | HMF-2 | 6/A002 | 7/A002 | --- | --- | 5 | |
| 110 | C | SINGLE | --- | HMF-2 | 6/A002 | 7/A002 | --- | --- | 5 | |
| 111 | C | SINGLE | --- | HMF-2 | 6/A002 | 7/A002 | --- | --- | 10 | |
| 112 | C | SINGLE | --- | HMF-2 | 6/A002 | 7/A002 | --- | --- | 10 | |
| 113 | C | PAIR | --- | HMF-3 | 6/A002 | 7/A002 | --- | --- | 6 | |
| 114 | D | SINGLE | --- | HMF-2 | 4/A002 | 5/A002 | --- | --- | 11 | BLINDS IN BETWEEN GLASS AT DOOR |
| 115.1 | E | SINGLE | ALUM | HMF-2 | 1/A002 | 2/A002 | 3/A002 | --- | 4 | |
| 116.1 | C | PAIR | --- | HMF-3 | 6/A002 | 7/A002 | --- | --- | 3 | |
| 116.2 | E | SINGLE | ALUM | HMF-2 | 1/A002 | 2/A002 | 3/A002 | --- | 4 | |
| 117 | C | SINGLE | --- | HMF-2 | 6/A002 | 7/A002 | --- | --- | 5 | |
| 118 | D | SINGLE | --- | HMF-2 | 4/A002 | 5/A002 | --- | --- | 7 | |
| 119 | C | SINGLE | --- | HMF-2 | 6/A002 | 7/A002 | --- | --- | 8 | |
| 120 | C | SINGLE | --- | HMF-2 | 6/A002 | 7/A002 | --- | --- | 8 | |
| 121 | C | SINGLE | --- | HMF-2 | 6/A002 | 7/A002 | --- | --- | 5 | |
| 122 | C | SINGLE | --- | HMF-2 | 4/A002 | 5/A002 | --- | --- | 7 | |

## GLAZING LEGEND

- A — 1" TEMPERED INSULATED GLASS
- B — 1" INSULATED GLASS
- C — 1/4" TEMPERED CLEAR POLISHED PLATE GLASS
- D — 1/4" CLEAR POLISHED PLATE GLASS

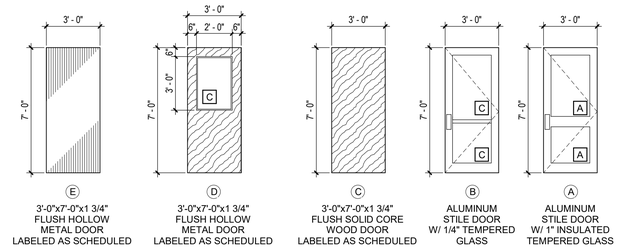


## visual door types
1/4" = 1'-0"

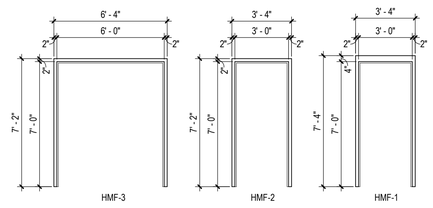


## hollow metal frame schedule
1/4" = 1'-0"

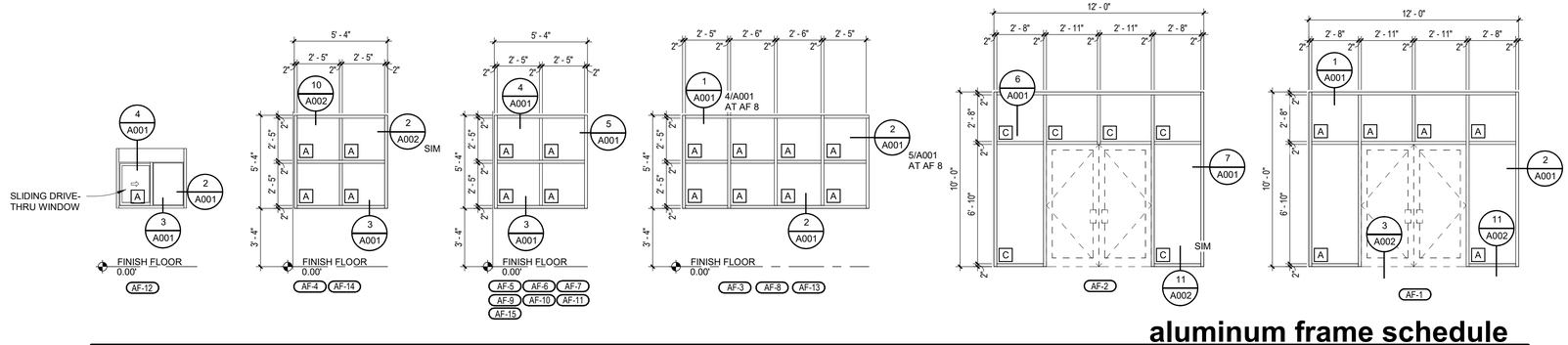


## aluminum frame schedule
1/4" = 1'-0"

POINSETT COUNTY COURTHOUSE ANNEX

**POINSETT COUNTY**

Harrisburg, Arkansas


BRACKETT KRENNERICH architects

100 East Huntington Ave. Suite D P.O. Box 1655 870-932-0571 Fax 870-932-0975 www.bkarchts.com


| Revision Schedule | | | |
|---|---|---|---|
| Tag | Rev. Description | Rev. Date | Issued by |

BRACKETT KRENNERICH & ASSOCIATES, P.A. REGISTERED ARCHITECTS C13 26 JULY 2024 ARKANSAS

Commission Number 2237

A001

Date: July 26, 2024

DOOR SCHEDULE, VISUAL DOOR TYPES, ALUMINUM FRAME SCHEDULE

C:\Users\toddw\Documents\2237 Poinsett Annex CD 07-31-24 Central_BKarch.rvt
8/7/2024 8:14:37 AM

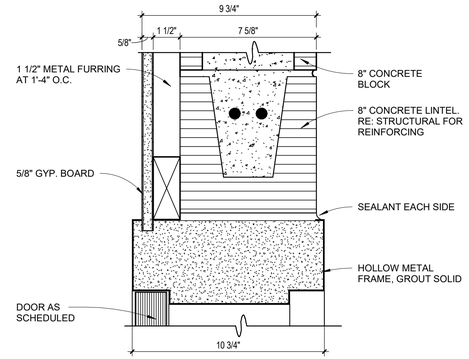


**8** **head detail**
SCALE: 3" = 1'-0"

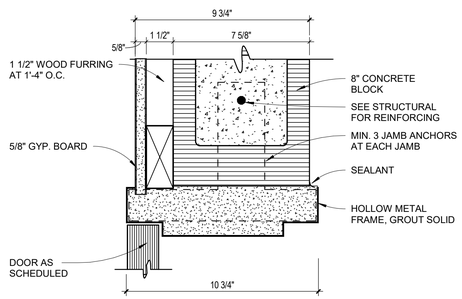


**9** **jamb detail**
SCALE: 3" = 1'-0"

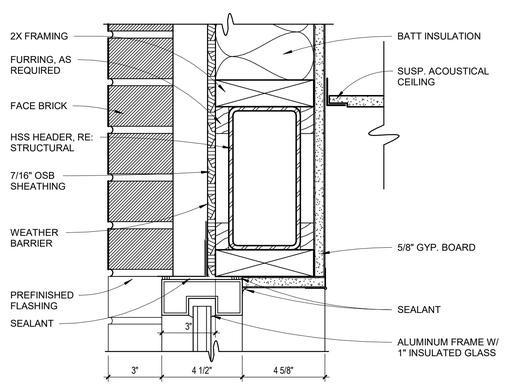


**10** **head detail**
SCALE: 3" = 1'-0"

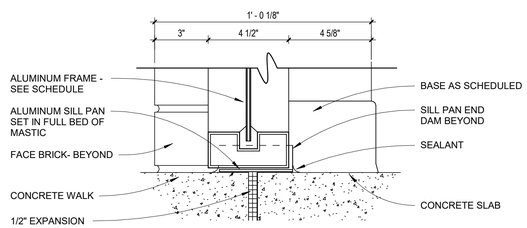


**11** **sill detail**
SCALE: 3" = 1'-0"

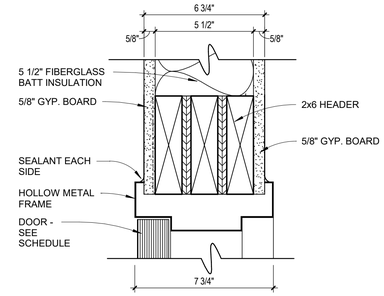


**4** **head detail**
SCALE: 3" = 1'-0"

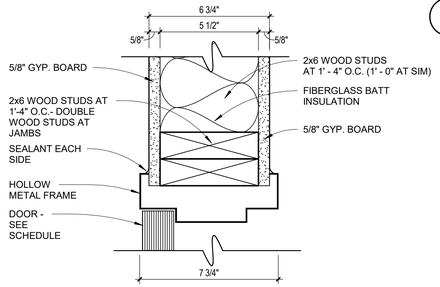


**5** **jamb detail**
SCALE: 3" = 1'-0"

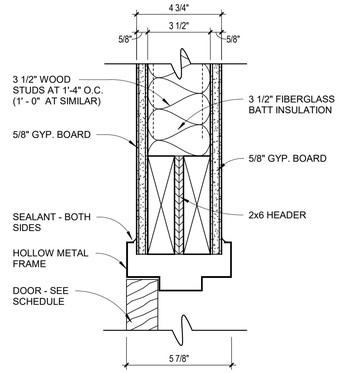


**6** **head detail**
SCALE: 3" = 1'-0"

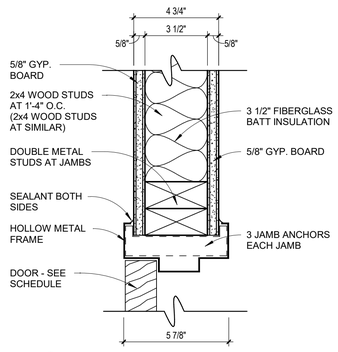


**7** **jamb detail**
SCALE: 3" = 1'-0"

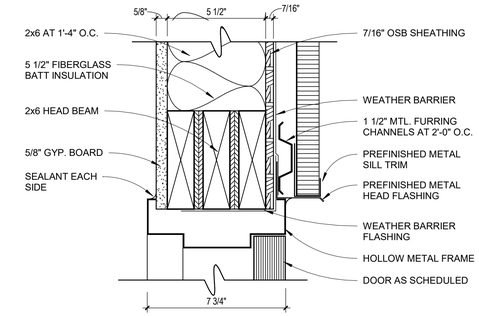


**1** **head detail**
SCALE: 3" = 1'-0"

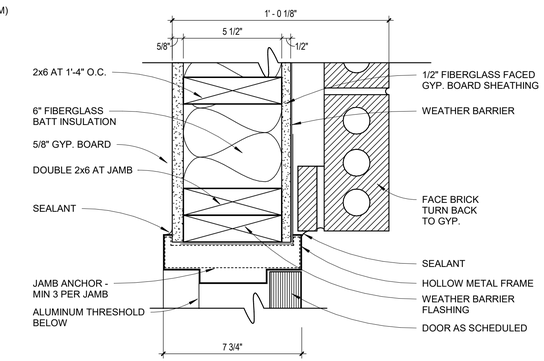


**2** **jamb detail**
SCALE: 3" = 1'-0"

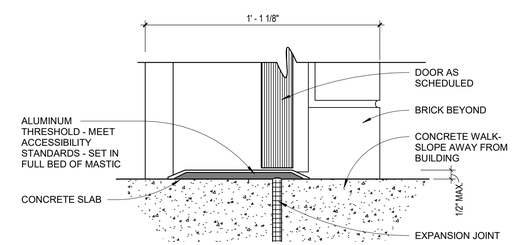


**3** **threshold detail**
SCALE: 3" = 1'-0"

POINSETT COUNTY COURTHOUSE ANNEX
**POINSETT COUNTY**
**Harrisburg, Arkansas**


BRACKETT KRENNERICH architects
100 East Huntington Ave. Suite D P.O. Box 1655 870-932-0571 Fax 870-932-0975 www.bkarchts.com


| Revision Schedule | | | |
|---|---|---|---|
| Tag | Rev. Description | Rev. Date | Issued by |

BRACKETT KRENNERICH & ASSOCIATES, P.A.
REGISTERED ARCHITECTS
C13
26 JULY 2024
ARKANSAS

Commission Number
2237

A002

Date: July 26, 2024

HOLLOW METAL FRAME DETAILS

C:\Users\toddw\Documents\2237 Poinsett Annex CD 07-31-24 central_toddwatch.rvt
8/7/2024 8:14:37 AM

## FINISH SCHEDULE - FIRST FLOOR

| Room No. | Room Name | Floor Finish | Base | Wall Finish: North | Wall Finish: East | Wall Finish: South | Wall Finish: West | Ceiling Finish |
|---|---|---|---|---|---|---|---|---|
| 100 | VESTIBULE | 12 X 24 PORCELAIN TILE | TILE BASE | PAINTED GYP. BOARD | PAINTED GYP. BOARD | PAINTED GYP. BOARD | PAINTED GYP. BOARD | 2X2 SUSP. ACOUSTICAL CEILING TILE |
| 101 | LOBBY | 12 X 24 PORCELAIN TILE | TILE BASE | PAINTED GYP. BOARD | PAINTED GYP. BOARD | PAINTED GYP. BOARD | PAINTED GYP. BOARD | 2X2 SUSP. ACOUSTICAL CEILING TILE / PAINTED GYP. BOARD |
| 102 | ASSESSOR | CARPET TILE | 4" RUBBER BASE | PAINTED GYP. BOARD | PAINTED GYP. BOARD | PAINTED GYP. BOARD | PAINTED GYP. BOARD | 2X2 SUSP. ACOUSTICAL CEILING TILE |
| 103 | ASSESSOR'S OFFICE | CARPET TILE | 4" RUBBER BASE | PAINTED GYP. BOARD | PAINTED GYP. BOARD | PAINTED GYP. BOARD | PAINTED GYP. BOARD | 2X2 SUSP. ACOUSTICAL CEILING TILE |
| 104 | FILES | CARPET TILE | 4" RUBBER BASE | PAINTED GYP. BOARD | PAINTED GYP. BOARD | PAINTED GYP. BOARD | PAINTED GYP. BOARD | 2X2 SUSP. ACOUSTICAL CEILING TILE |
| 105 | MULTI-PURPOSE SAFE ROOM | CARPET TILE | 4" RUBBER BASE | PAINTED CMU | PAINTED CMU | PAINTED CMU | PAINTED CMU | 2X2 SUSP. ACOUSTICAL CEILING TILE |
| 106 | MECHANICAL | SEALED CONCRETE | 4" RUBBER BASE | PAINTED GYP. BOARD | PAINTED GYP. BOARD | PAINTED GYP. BOARD | PAINTED GYP. BOARD | EXPOSED TO STRUCTURE |
| 107 | I.T. | SEALED CONCRETE | 4" RUBBER BASE | PAINTED GYP. BOARD | PAINTED GYP. BOARD | PAINTED GYP. BOARD | PAINTED GYP. BOARD | EXPOSED TO STRUCTURE |
| 108 | CORRIDOR | 12 X 24 PORCELAIN TILE | TILE BASE | PAINTED GYP. BOARD | PAINTED GYP. BOARD | PAINTED GYP. BOARD | PAINTED GYP. BOARD | 2X2 SUSP. ACOUSTICAL CEILING TILE |
| 109 | JANITOR | SEALED CONCRETE | 4" RUBBER BASE | PAINTED GYP. BOARD | PAINTED GYP. BOARD | PAINTED GYP. BOARD | PAINTED GYP. BOARD | 2X2 SUSP. ACOUSTICAL CEILING TILE |
| 110 | ELECTRICAL | SEALED CONCRETE | 4" RUBBER BASE | PAINTED GYP. BOARD | PAINTED GYP. BOARD | PAINTED GYP. BOARD | PAINTED GYP. BOARD | EXPOSED TO STRUCTURE |
| 111 | WOMEN | 12 X 24 PORCELAIN TILE | PORCELAIN TILE WAINSCOT | PORCELAIN TILE / EPOXY PAINTED GYP. BOARD | PORCELAIN TILE / EPOXY PAINTED GYP. BOARD | PORCELAIN TILE / EPOXY PAINTED GYP. BOARD | PORCELAIN TILE / EPOXY PAINTED GYP. BOARD | 2X2 SUSP. ACOUSTICAL CEILING TILE |
| 112 | MEN | 12 X 24 PORCELAIN TILE | PORCELAIN TILE WAINSCOT | PORCELAIN TILE / EPOXY PAINTED GYP. BOARD | PORCELAIN TILE / EPOXY PAINTED GYP. BOARD | PORCELAIN TILE / EPOXY PAINTED GYP. BOARD | PORCELAIN TILE / EPOXY PAINTED GYP. BOARD | 2X2 SUSP. ACOUSTICAL CEILING TILE |
| 113 | STORAGE | 12 X 24 PORCELAIN TILE | TILE BASE | PAINTED GYP. BOARD | PAINTED GYP. BOARD | PAINTED GYP. BOARD | PAINTED GYP. BOARD | 2X2 SUSP. ACOUSTICAL CEILING TILE |
| 114 | BREAK ROOM | 12 X 24 PORCELAIN TILE | TILE BASE | PAINTED GYP. BOARD | PAINTED GYP. BOARD | PAINTED GYP. BOARD | PAINTED GYP. BOARD | 2X2 SUSP. ACOUSTICAL CEILING TILE |
| 115 | CORRIDOR | 12 X 24 PORCELAIN TILE | TILE BASE | PAINTED GYP. BOARD | PAINTED GYP. BOARD | PAINTED GYP. BOARD | PAINTED GYP. BOARD | 2X2 SUSP. ACOUSTICAL CEILING TILE / PAINTED GYP. BOARD |
| 116 | QUORUM COURT | 12 X 24 PORCELAIN TILE | TILE BASE | PAINTED GYP. BOARD | PAINTED GYP. BOARD | PAINTED GYP. BOARD [1] | PAINTED GYP. BOARD | 2X2 SUSP. ACOUSTICAL CEILING TILE |
| 117 | FILE ROOM | CARPET TILE | 4" RUBBER BASE | PAINTED GYP. BOARD | PAINTED GYP. BOARD | PAINTED GYP. BOARD | PAINTED GYP. BOARD | 2X2 SUSP. ACOUSTICAL CEILING TILE |
| 118 | JUDGE RECEPTION | CARPET TILE | 4" RUBBER BASE | PAINTED GYP. BOARD | PAINTED GYP. BOARD | PAINTED GYP. BOARD | PAINTED GYP. BOARD | 2X2 SUSP. ACOUSTICAL CEILING TILE |
| 119 | COUNTY JUDGE | CARPET TILE | 4" RUBBER BASE | PAINTED GYP. BOARD | PAINTED GYP. BOARD | PAINTED GYP. BOARD | PAINTED GYP. BOARD | 2X2 SUSP. ACOUSTICAL CEILING TILE |
| 120 | COLLECTOR OFFICE | CARPET TILE | 4" RUBBER BASE | PAINTED GYP. BOARD | PAINTED GYP. BOARD | PAINTED GYP. BOARD | PAINTED GYP. BOARD | 2X2 SUSP. ACOUSTICAL CEILING TILE |
| 121 | COLLECTOR VAULT | CARPET TILE | 4" RUBBER BASE | PAINTED GYP. BOARD | PAINTED GYP. BOARD | PAINTED GYP. BOARD | PAINTED GYP. BOARD | 2X2 SUSP. ACOUSTICAL CEILING TILE |
| 122 | COLLECTOR | CARPET TILE | 4" RUBBER BASE | PAINTED GYP. BOARD | PAINTED GYP. BOARD | PAINTED GYP. BOARD | PAINTED GYP. BOARD | 2X2 SUSP. ACOUSTICAL CEILING TILE |
| A | STAIR | SEALED CONCRETE | 4" RUBBER BASE | PAINTED GYP. BOARD | PAINTED GYP. BOARD | PAINTED GYP. BOARD | PAINTED GYP. BOARD | EXPOSED TO STRUCTURE |

## FINISH SCHEDULE - SECOND FLOOR

| Room No. | Room Name | Floor Finish | Base | Wall Finish: North | Wall Finish: East | Wall Finish: South | Wall Finish: West | Ceiling Finish |
|---|---|---|---|---|---|---|---|---|
| 200 | STORAGE | ---- | ---- | ---- | ---- | ---- | ---- | EXPOSED TO STRUCTURE |

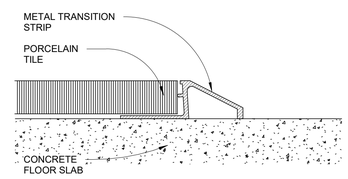


**2** porcelain tile / conc.
SCALE: 12" = 1'-0"

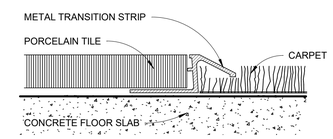


**1** porcelain tile / carpet
SCALE: 1 : 1

**FLOOR FINISH LEGEND**

- 12 X 24 PORCELAIN TILE
- CARPET TILE
- SEALED CONCRETE

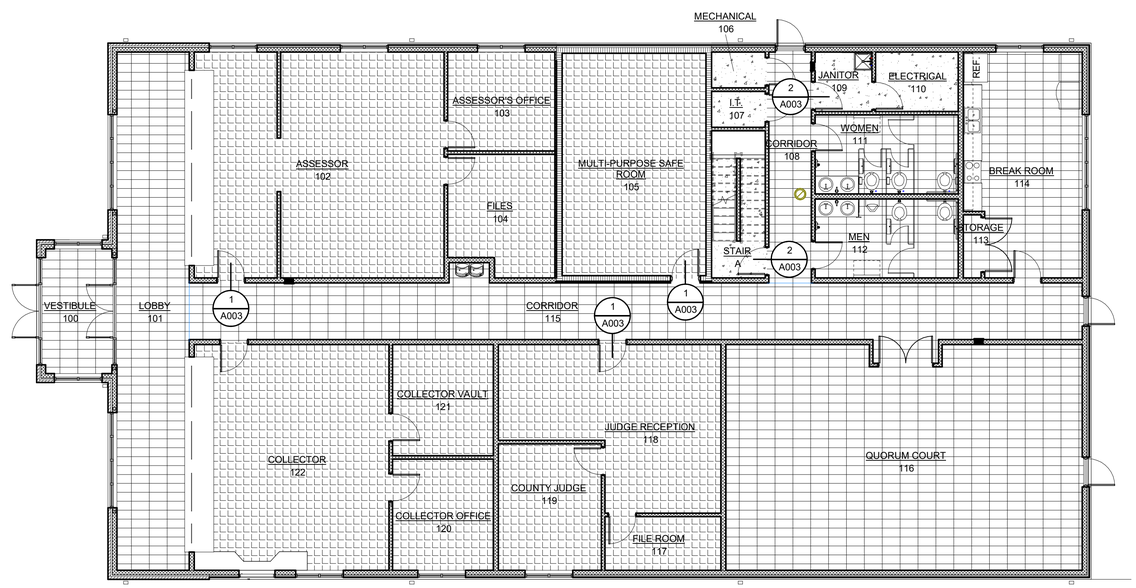


TRUE NORTH BUILDING NORTH

**first floor finish plan**
SCALE: 1/8" = 1'-0"

POINSETT COUNTY COURTHOUSE ANNEX

# POINSETT COUNTY

Harrisburg, Arkansas


BRACKETT KRENNERICH architects
100 East Huntington Ave. Suite D P.O. Box 1655 870-932-0571 Fax 870-932-0975 www.bkarchts.com


| Revision Schedule | | | |
|---|---|---|---|
| Tag | Rev. Description | Rev. Date | Issued by |

BRACKETT-KRENNERICH & ASSOCIATES, P.A. REGISTERED ARCHITECTS C13 26 JULY 2024 ARKANSAS

Commission Number 2237

A003

Date: July 26, 2024

FLOOR FINISHES PLAN, FINISH SCHEDULE

C:\Users\toddw\Documents\2237 Poinsett Annex CD 07-31-24 Central_toddwatch.rvt
8/7/2024 8:14:38 AM

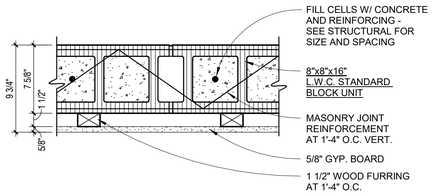


G **interior block wall**
SCALE: 1 1/2" = 1'-0"

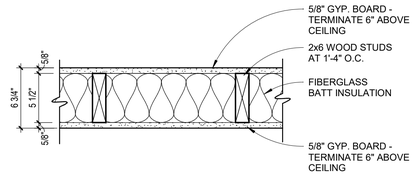


E **interior wall**
SCALE: 1 1/2" = 1'-0"

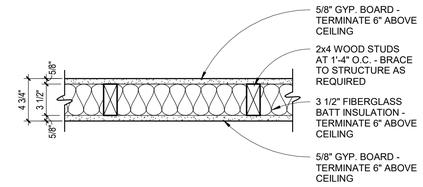


C **interior wall**
SCALE: 1 1/2" = 1'-0"

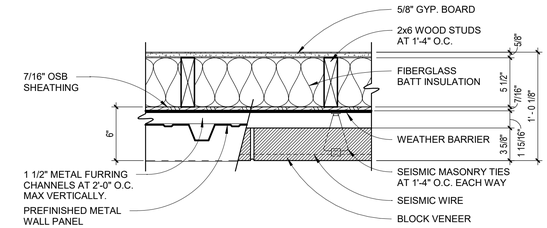


A **exterior wall**
SCALE: 1 1/2" = 1'-0"

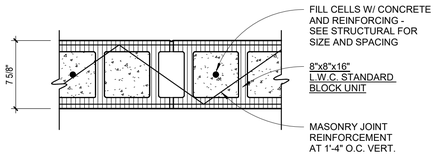


H **interior block wall**
SCALE: 1 1/2" = 1'-0"

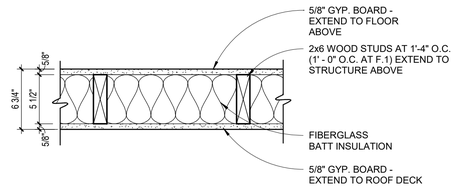


F.1 F **interior wall**
SCALE: 1 1/2" = 1'-0"

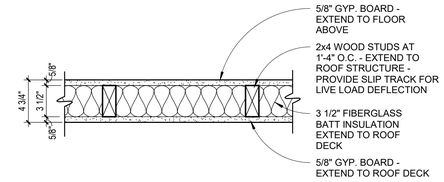


D **interior wall**
SCALE: 1 1/2" = 1'-0"

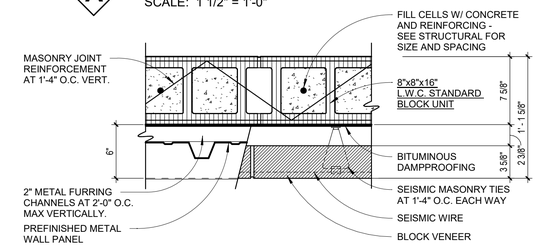


B **exterior wall**
SCALE: 1 1/2" = 1'-0"

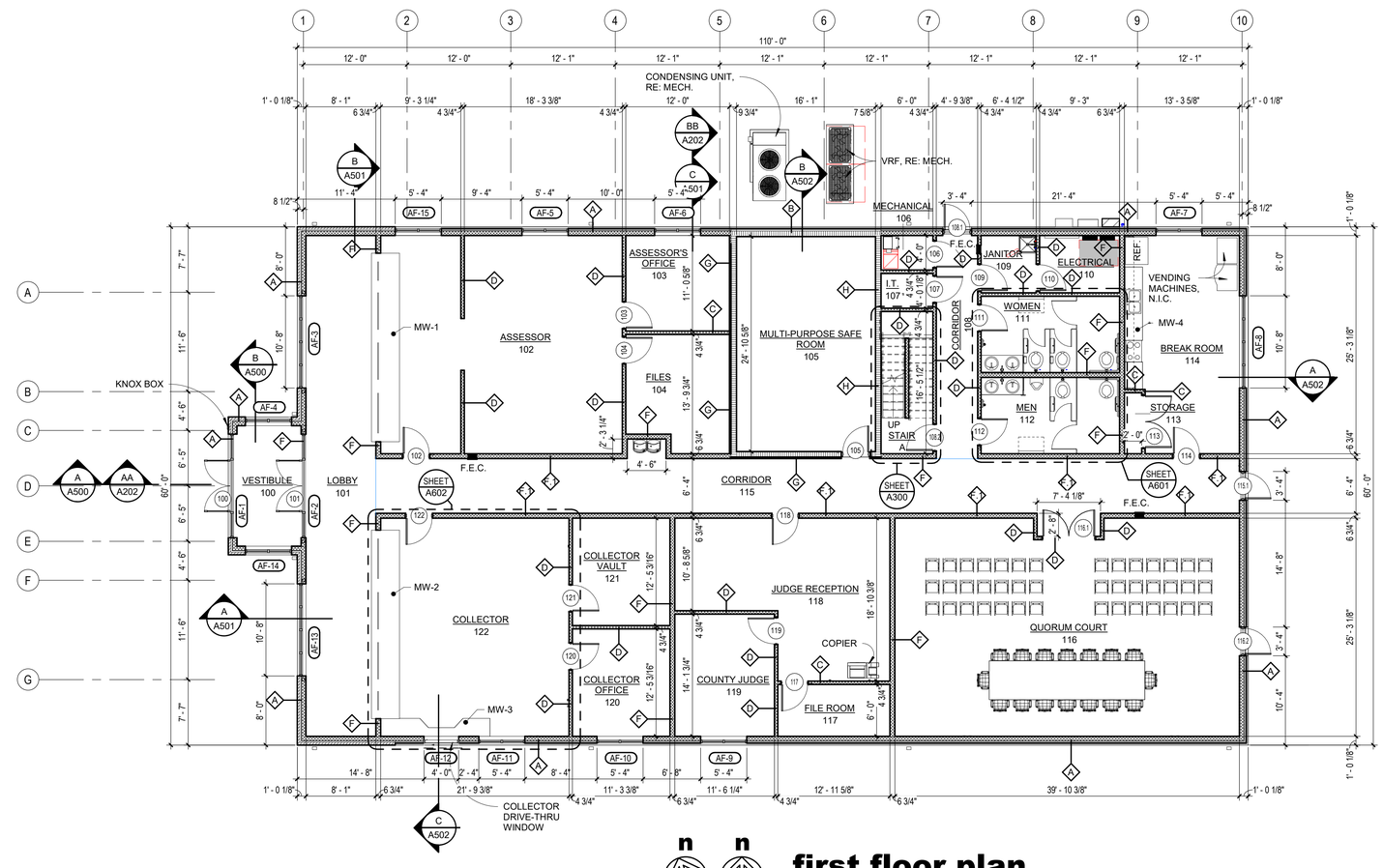


n TRUE NORTH
n BUILDING NORTH

**first floor plan**
SCALE: 1/8" = 1'-0"

POINSETT COUNTY COURTHOUSE ANNEX
# POINSETT COUNTY
Harrisburg, Arkansas

BRACKETT KRENNERICH architects
100 East Huntington Ave. Suite D P.O. Box 1655
870-932-0571 Fax 870-932-0975
www.bkarchts.com

| Revision Schedule | | | |
|---|---|---|---|
| Tag | Rev. Description | Rev. Date | Issued by |

BRACKETT KRENNERICH & ASSOCIATES, P.A.
REGISTERED ARCHITECTS
C13
26 JULY 2024
ARKANSAS

Commission Number 2237
A100
Date: July 26, 2024

FIRST FLOOR PLAN, WALL TYPES

C:\Users\toddw\Documents\2237 Poinsett Annex CD 07-31-24
C:\Users\toddwrich.rvt
8/7/2024 8:14:40 AM

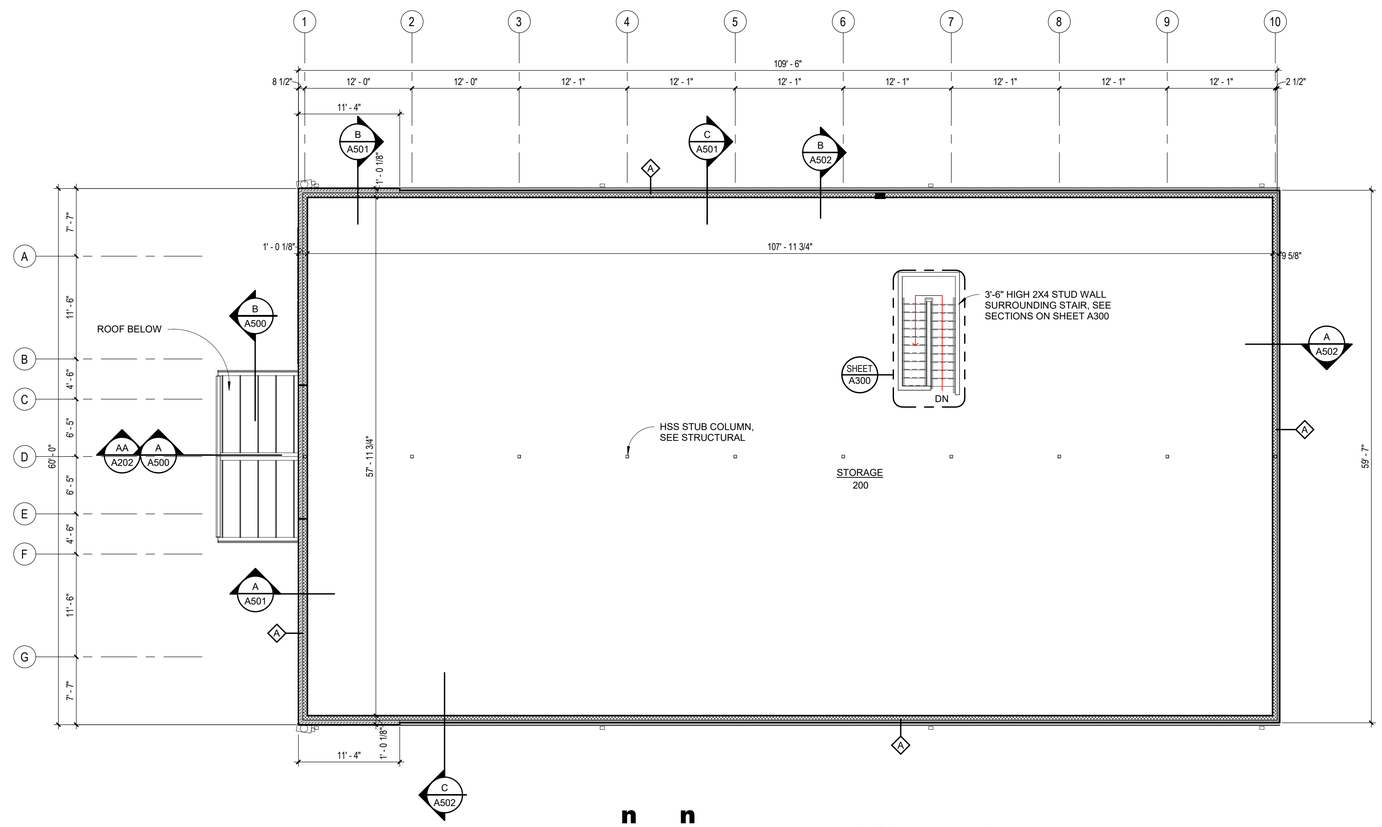


TRUE NORTH

BUILDING NORTH

# second floor plan

SCALE: 1/8" = 1'-0"

C:\Users\toddw\Documents\2237 Poinsett Annex CD 07-31-24 central_revised_toddwch.rvt
8/7/2024 8:14:41 AM

POINSETT COUNTY COURTHOUSE ANNEX

# POINSETT COUNTY

Harrisburg, Arkansas

BRACKETT KRENNERICH architects

100 East Huntington Ave. Suite D P.O. Box 1655 870-932-0571 Fax 870-932-0975 www.bkarchts.com

| Revision Schedule | | | |
|---|---|---|---|
| Tag | Rev. Description | Rev. Date | Issued by |

BRACKETT KRENNERICH & ASSOCIATES, P.A.
REGISTERED ARCHITECTS
C13
26 JULY 2024
ARKANSAS

Commission Number
2237

A101

Date: July 26, 2024

SECOND FLOOR

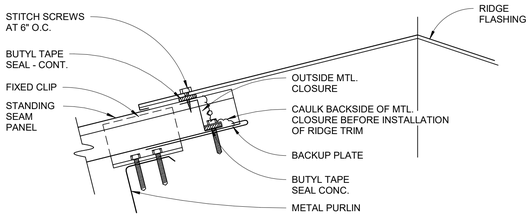


**4 roof ridge detail**
SCALE: 3" = 1'-0"

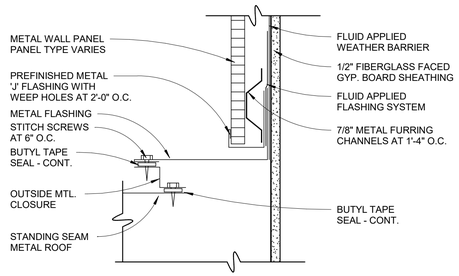


**3 flashing detail**
SCALE: 3" = 1'-0"

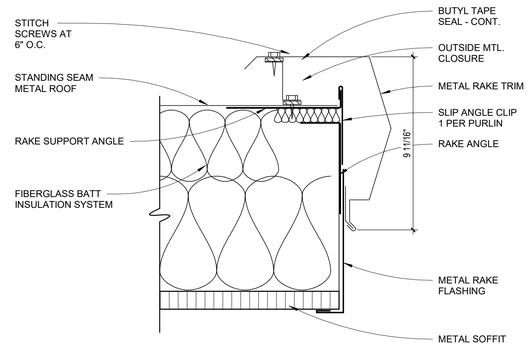


**2 rake detail**
SCALE: 3" = 1'-0"

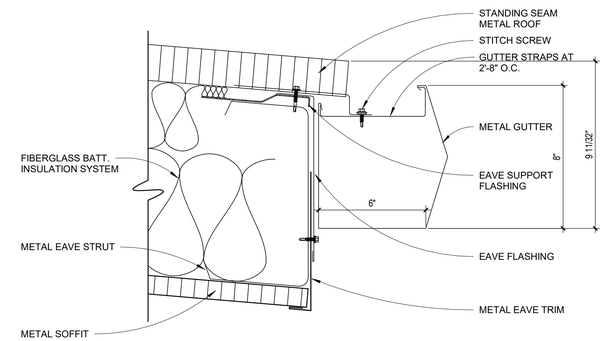


**1 gutter detail**
SCALE: 3" = 1'-0"

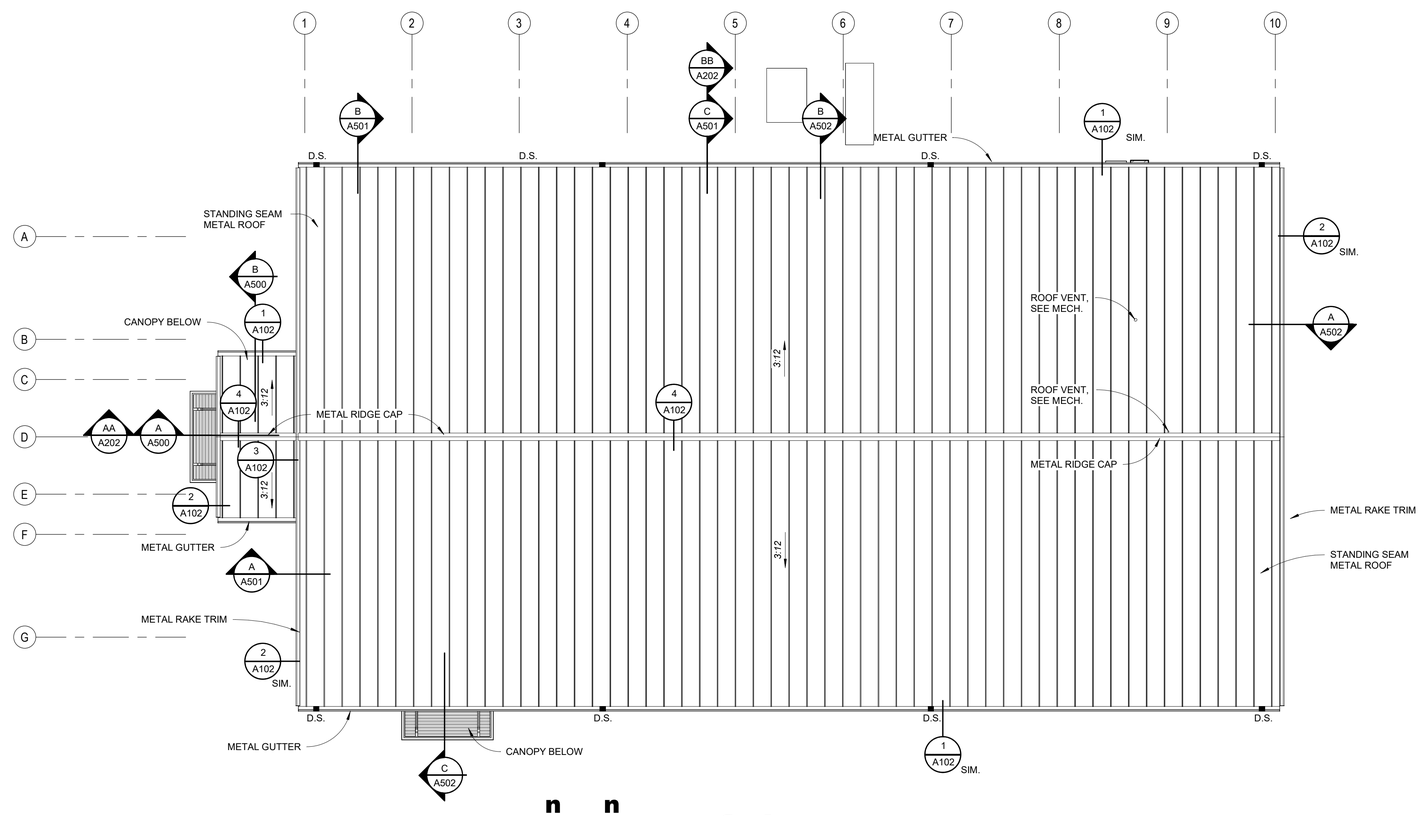


**roof plan**
SCALE: 1/8" = 1'-0"

TRUE NORTH — BUILDING NORTH

POINSETT COUNTY COURTHOUSE ANNEX
**POINSETT COUNTY**
**Harrisburg, Arkansas**

BRACKETT KRENNERICH architects
100 East Huntington Ave. Suite D P.O. Box 1655 870-932-0571 Fax 870-932-0975 www.bkarchts.com

| Revision Schedule | | | |
|---|---|---|---|
| Tag | Rev. Description | Rev. Date | Issued by |

BRACKETT KRENNERICH & ASSOCIATES, P.A. REGISTERED ARCHITECTS C13 26 JULY 2024 ARKANSAS

Commission Number 2237

A102

Date: July 26, 2024

ROOF PLAN & DETAILS

C:\Users\toddw\Documents\2237 Poinsett Annex CD 07-31-24 central_revised_toddwarch.rvt
8/7/2024 8:14:42 AM

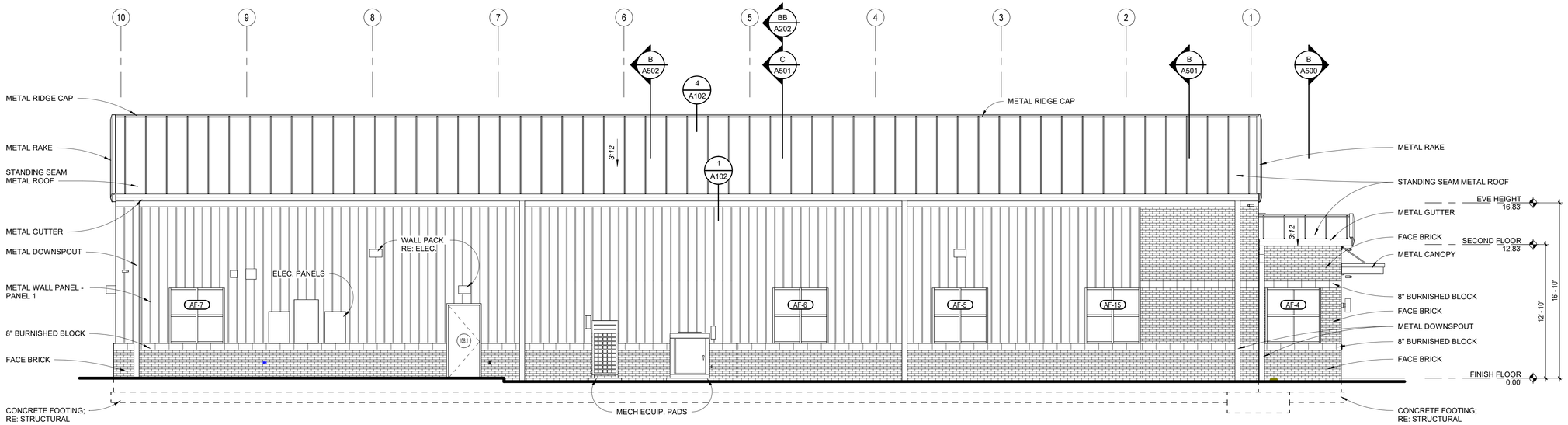


## north building elevation

SCALE: 3/16" = 1'-0"

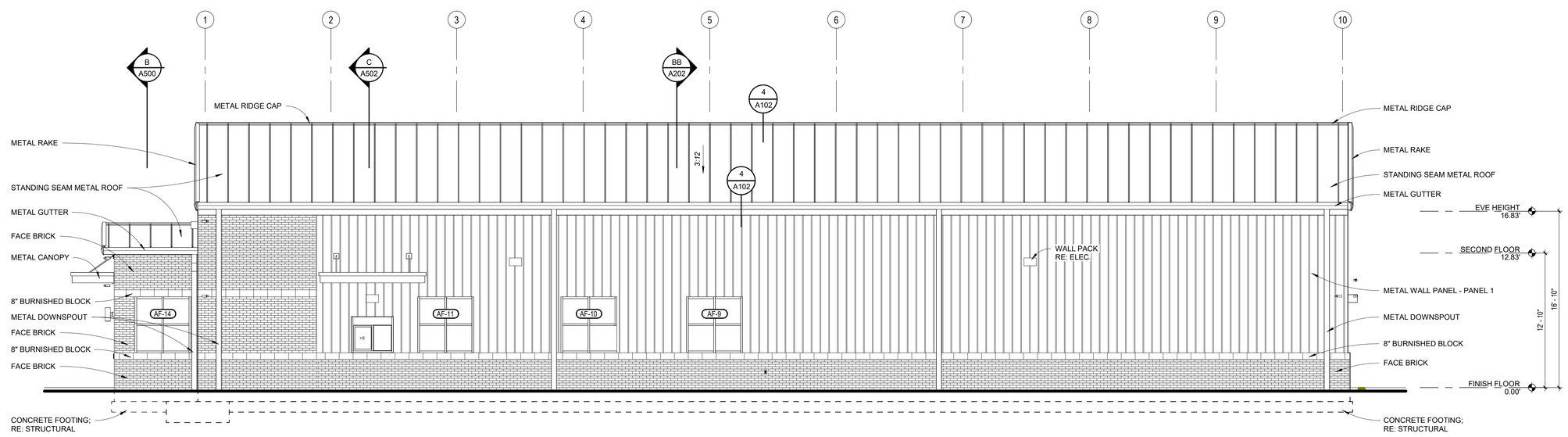


## south building elevation

SCALE: 3/16" = 1'-0"

C:\Users\todds\Documents\2237 Poinsett Annex CD 07-31-24 central_south.rvt
8/7/2024 8:14:43 AM

POINSETT COUNTY COURTHOUSE ANNEX

# POINSETT COUNTY

Harrisburg, Arkansas


BRACKETT KRENNERICH architects

100 East Huntington Ave. Suite D P.O. Box 1655 870-932-0571 Fax 870-932-0975 www.bkarchts.com


| Revision Schedule | | | | |
|---|---|---|---|---|
| Tag | Rev. Description | Rev. Date | Issued by | |

BRACKETT-KRENNERICH & ASSOCIATES, P.A.
REGISTERED ARCHITECTS
C13
26 JULY 2024
ARKANSAS

Commission Number 2237

A200

Date: July 26, 2024

EXTERIOR BUILDING ELEVATIONS

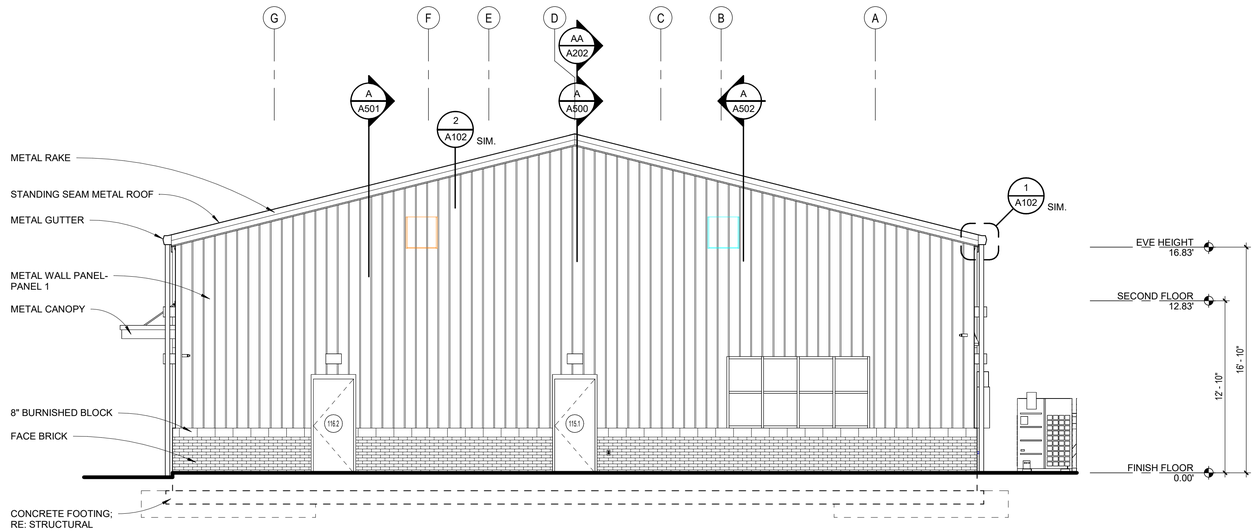


## east building elevation

SCALE: 3/16" = 1'-0"

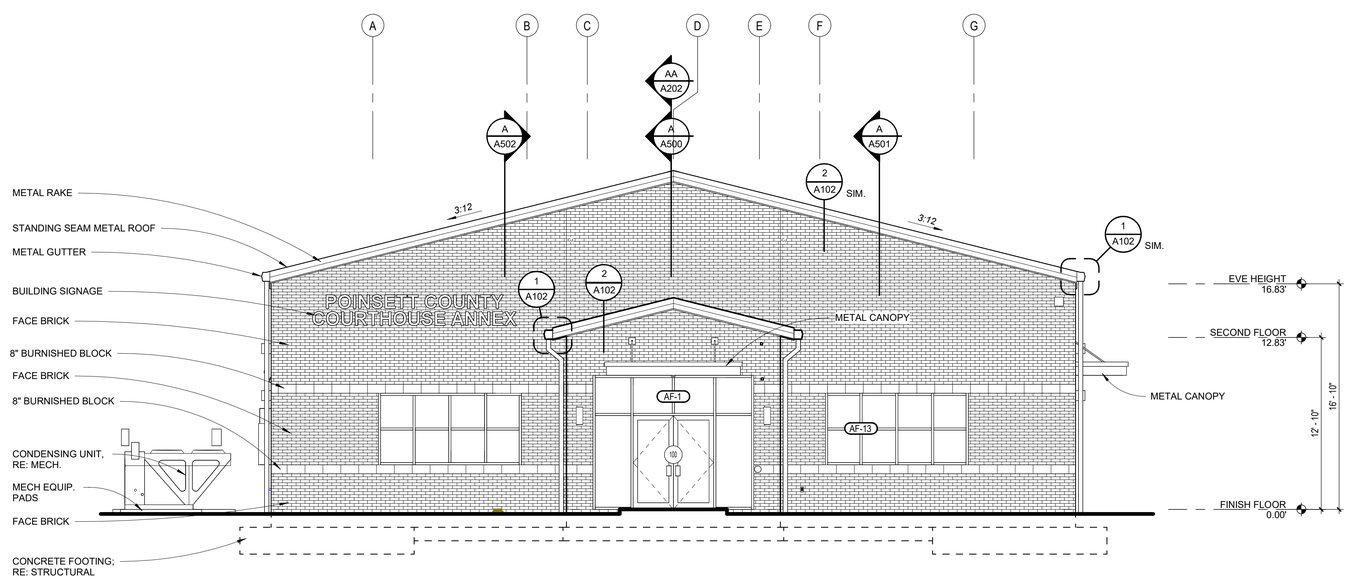


## west building elevation

SCALE: 3/16" = 1'-0"

C:\Users\todds\Documents\2237 Poinsett Annex CD 07-31-24
central.rvt
**8/7/2024 8:24:24 AM**

POINSETT COUNTY COURTHOUSE ANNEX

# POINSETT COUNTY

Harrisburg, Arkansas


BRACKETT KRENNERICH architects

100 East Huntington Ave. Suite D P.O. Box 1655 870-932-0571 Fax 870-932-0975 www.bkarchts.com


| Revision Schedule | | | |
|---|---|---|---|
| Tag | Rev. Description | Rev. Date | Issued by |

BRACKETT-KRENNERICH & ASSOCIATES, P.A.
REGISTERED ARCHITECTS
C13
26 JULY 2024
ARKANSAS

Commission Number
2237

A201

Date: July 26, 2024

EXTERIOR BUILDING ELEVATIONS

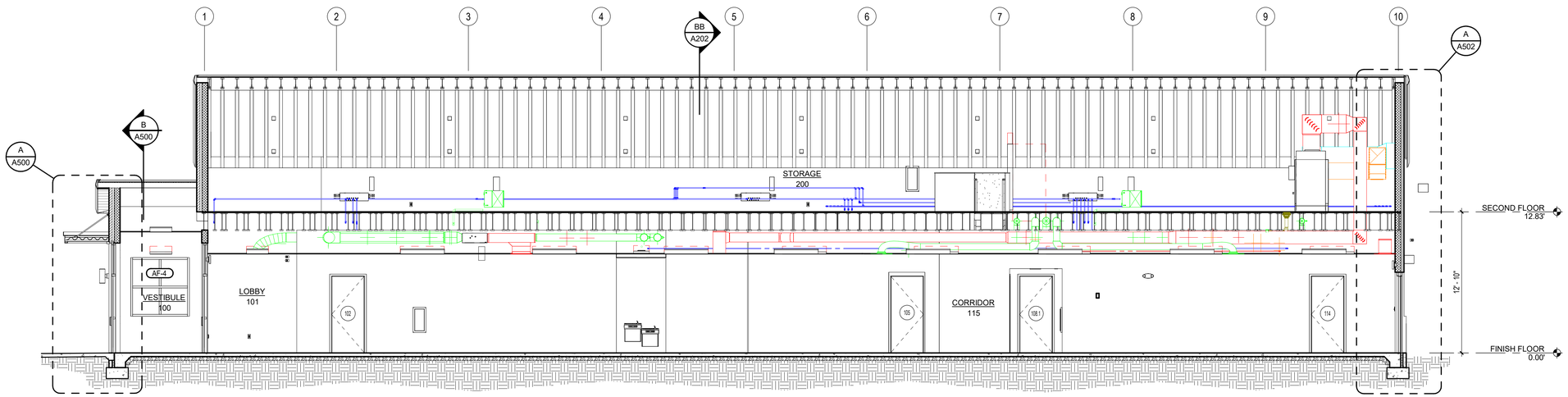


## AA building section

SCALE: 3/16" = 1'-0"

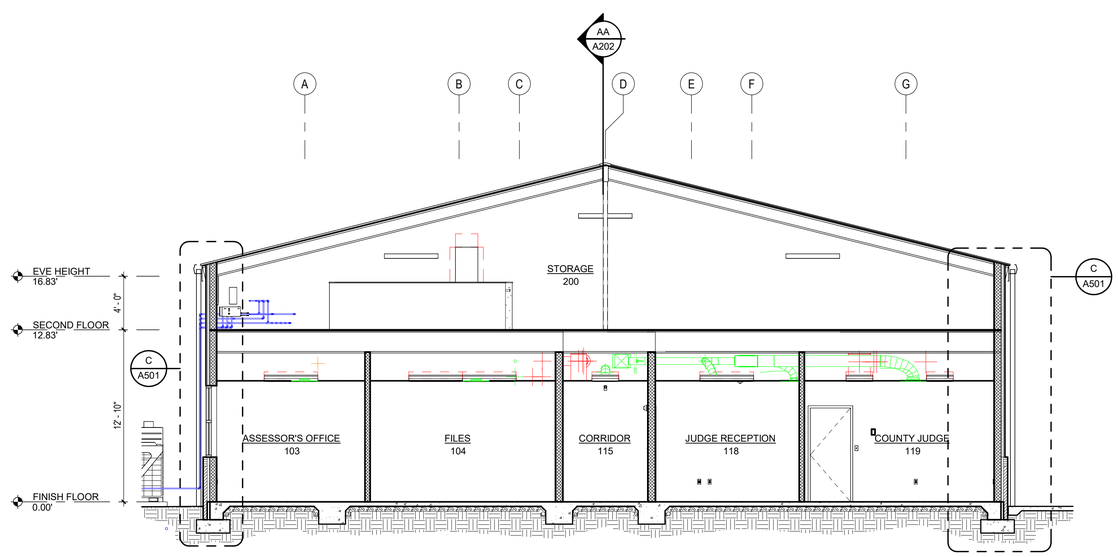


## BB building section

SCALE: 3/16" = 1'-0"

POINSETT COUNTY COURTHOUSE ANNEX

# POINSETT COUNTY

Harrisburg, Arkansas

BRACKETT KRENNERICH architects

100 East Huntington Ave. Suite D P.O. Box 1655 870-932-0571 Fax 870-932-0975 www.bkarchts.com

| Revision Schedule | | | |
|---|---|---|---|
| Tag | Rev. Description | Rev. Date | Issued by |

BRACKETT-KRENNERICH & ASSOCIATES, P.A.
REGISTERED ARCHITECTS
C13
26 JULY 2024
ARKANSAS

Commission Number
2237

A202

Date: July 26, 2024

BUILDING SECTIONS

C:\Users\todds\Documents\2237 Poinsett Annex CD 07-31-24
central_model_todds.rvt
8/7/2024 8:14:46 AM

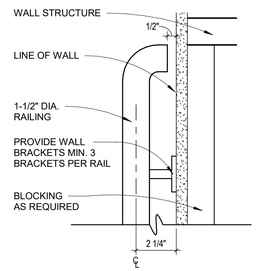


**3 rail end detail**
SCALE: 3" = 1'-0"

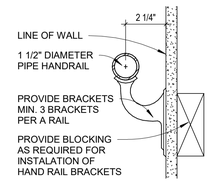


**2 detail at rail**
SCALE: 3" = 1'-0"

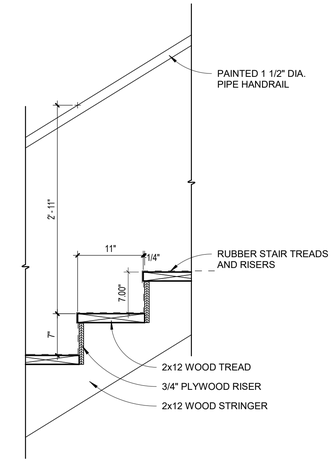


**1 stair detail**
SCALE: 1" = 1'-0"

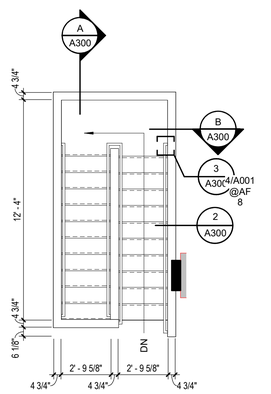


**stair 'A' second floor**
SCALE: 1/4" = 1'-0"

TRUE NORTH BUILDING NORTH

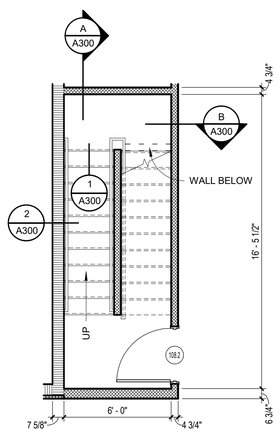


**stair 'A' first floor**
SCALE: 1/4" = 1'-0"

TRUE NORTH BUILDING NORTH

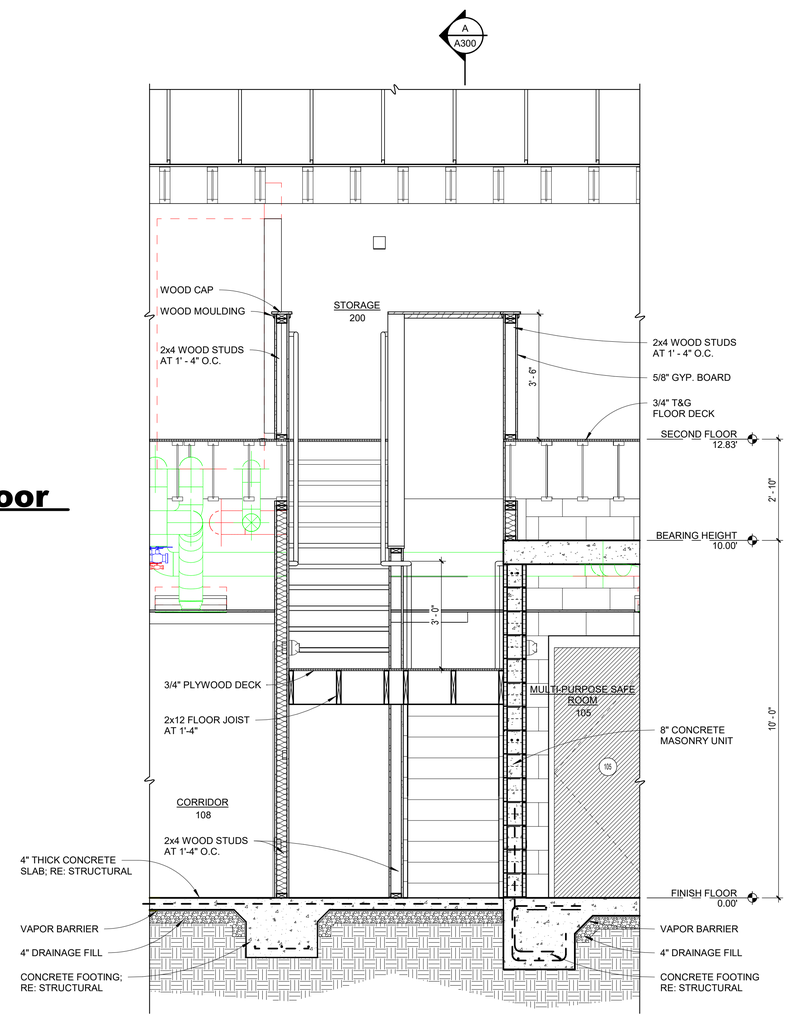


**B stair section**
SCALE: 1/2" = 1'-0"

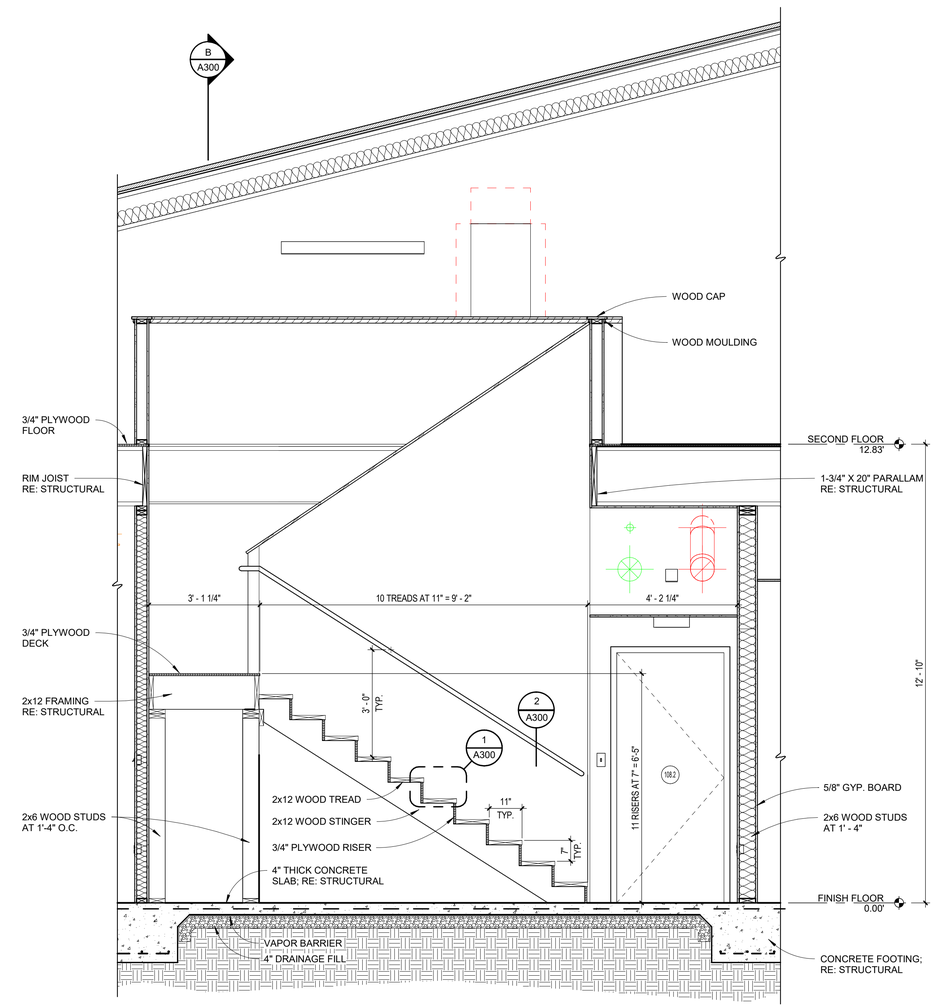


**A stair section**
SCALE: 1/2" = 1'-0"

POINSETT COUNTY COURTHOUSE ANNEX

# POINSETT COUNTY

Harrisburg, Arkansas

BRACKETT KRENNERICH architects
100 East Huntington Ave. Suite D P.O. Box 1655
870-932-0571 Fax 870-932-0975
www.bkarchts.com

| Revision Schedule | | | |
|---|---|---|---|
| Tag | Rev. Description | Rev. Date | Issued by |

BRACKETT-KRENNERICH & ASSOCIATES, P.A.
REGISTERED ARCHITECTS
C13
26 JULY 2024
ARKANSAS

Commission Number
2237

A300

Date: July 26, 2024

ENLARGED STAIR PLANS, STAIR DETAILS

C:\Users\loadw\Documents\2237 Poinsett Annex CD 07-31-24 central_loadw.rvt
8/7/2024 8:14:47 AM

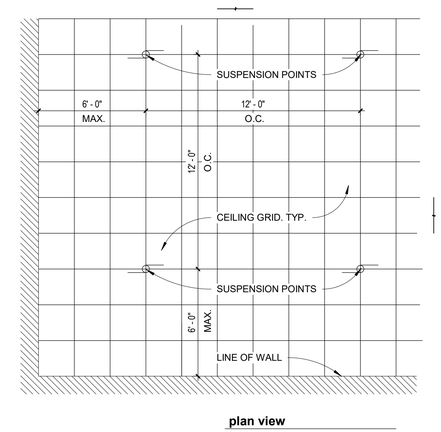


## seismic detail

1/4" = 1'-0"

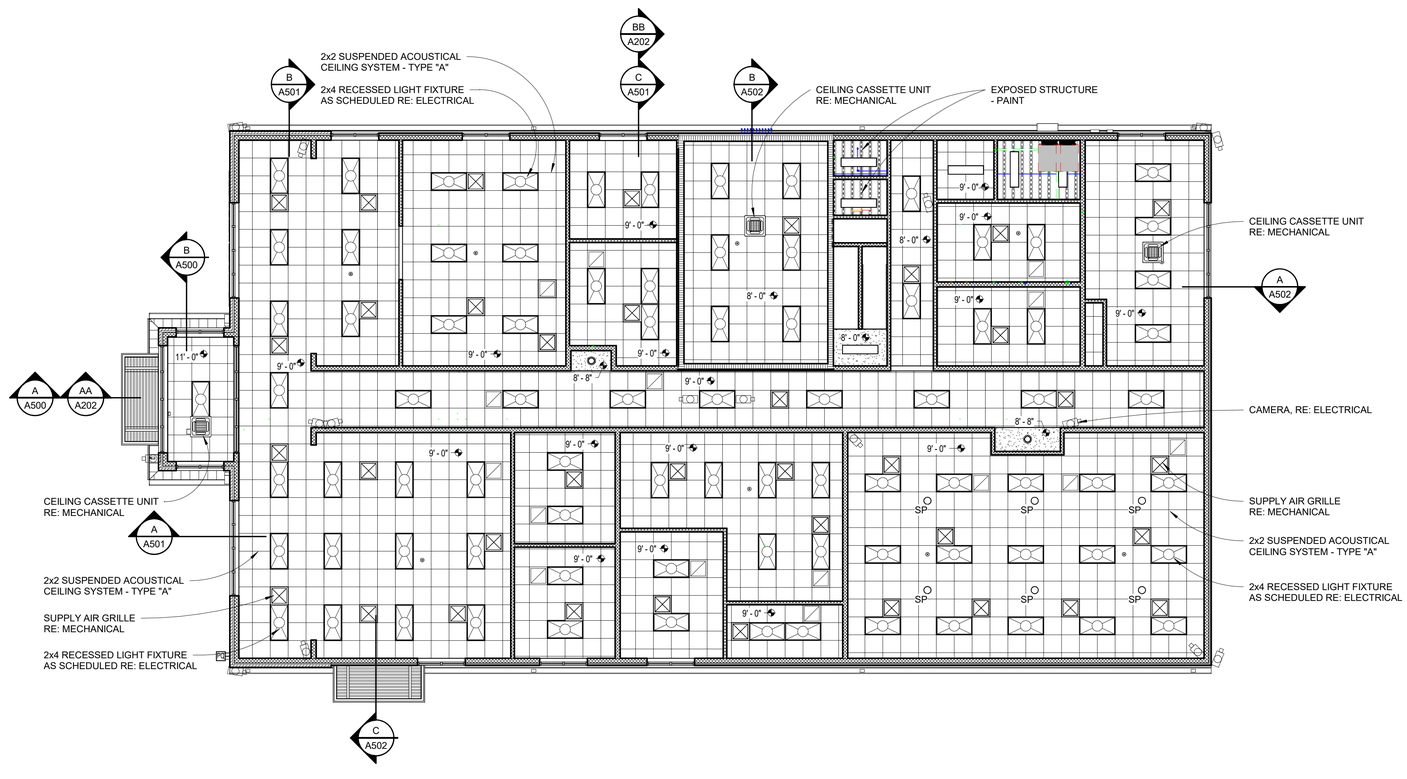


n n

TRUE NORTH BUILDING NORTH

## first floor reflected ceiling plan

SCALE: 1/8" = 1'-0"

### ARCHITECTURAL

- 2x2 SUSP. ACOUSTICAL CEILING SYSTEM - TYPE 'A'
- 2x2 SUSP. ACOUSTICAL CEILING SYSTEM - TYPE 'B'
- PAINTED GYP. BOARD
- METAL SOFFIT
- PERFORATED METAL SOFFIT
- EXPOSED STRUCTURE

### MECHANICAL

- RETURN AIR GRILLE
- SUPPLY AIR GRILLE
- EXHAUST FAN

SEE MECHANICAL PLAN FOR FURTHER DETAILS AND INFORMATION

### ELECTRICAL

- 2x4 RECESSED LIGHT FIXTURE
- WALL MOUNT LIGHT FIXTURE
- RECESSED CEILING LIGHT FIXTURE
- WALL MOUNT LIGHT FIXTURE
- DECORATIVE SUSP. LIGHT FIXTURE
- STRIP LIGHT
- STRIP LIGHT W/ COVER
- SUSPENDED LIGHT FIXTURE
- HIGH BAY LIGHT FIXTURE
- EXTERIOR DECORATIVE SCONCE
- EXTERIOR WALL PACK
- EXIT SIGN

SEE ELECTRICAL PLAN FOR FURTHER DETAILS AND INFORMATION

# POINSETT COUNTY COURTHOUSE ANNEX

# POINSETT COUNTY

## Harrisburg, Arkansas

BRACKETT KRENNERICH architects
100 East Huntington Ave. Suite D P.O. Box 1655 870-932-0571 Fax 870-932-0975 www.bkarchts.com

| Revision Schedule | | | |
|---|---|---|---|
| Tag | Rev. Description | Rev. Date | Issued by |

BRACKETT & KRENNERICH & ASSOCIATES, P.A. REGISTERED ARCHITECTS C13 26 JULY 2024 ARKANSAS

Commission Number 2237

A400

Date: July 26, 2024

FIRST FLOOR REFLECTED CEILING PLAN

C:\Users\todaw\Documents\2237 Poinsett Annex CD 07-31-24 central_updatedwith.rvt
8/7/2024 8:14:48 AM

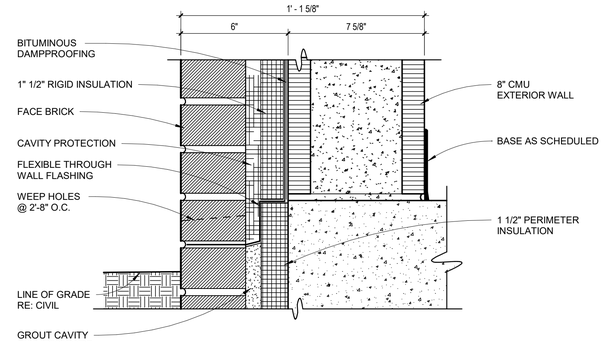


**2 through wall flashing detail at block**
SCALE: 3" = 1'-0"

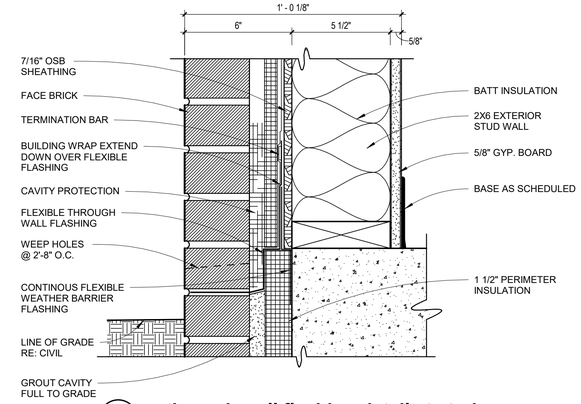


**1 through wall flashing detail at studs**
SCALE: 3" = 1'-0"

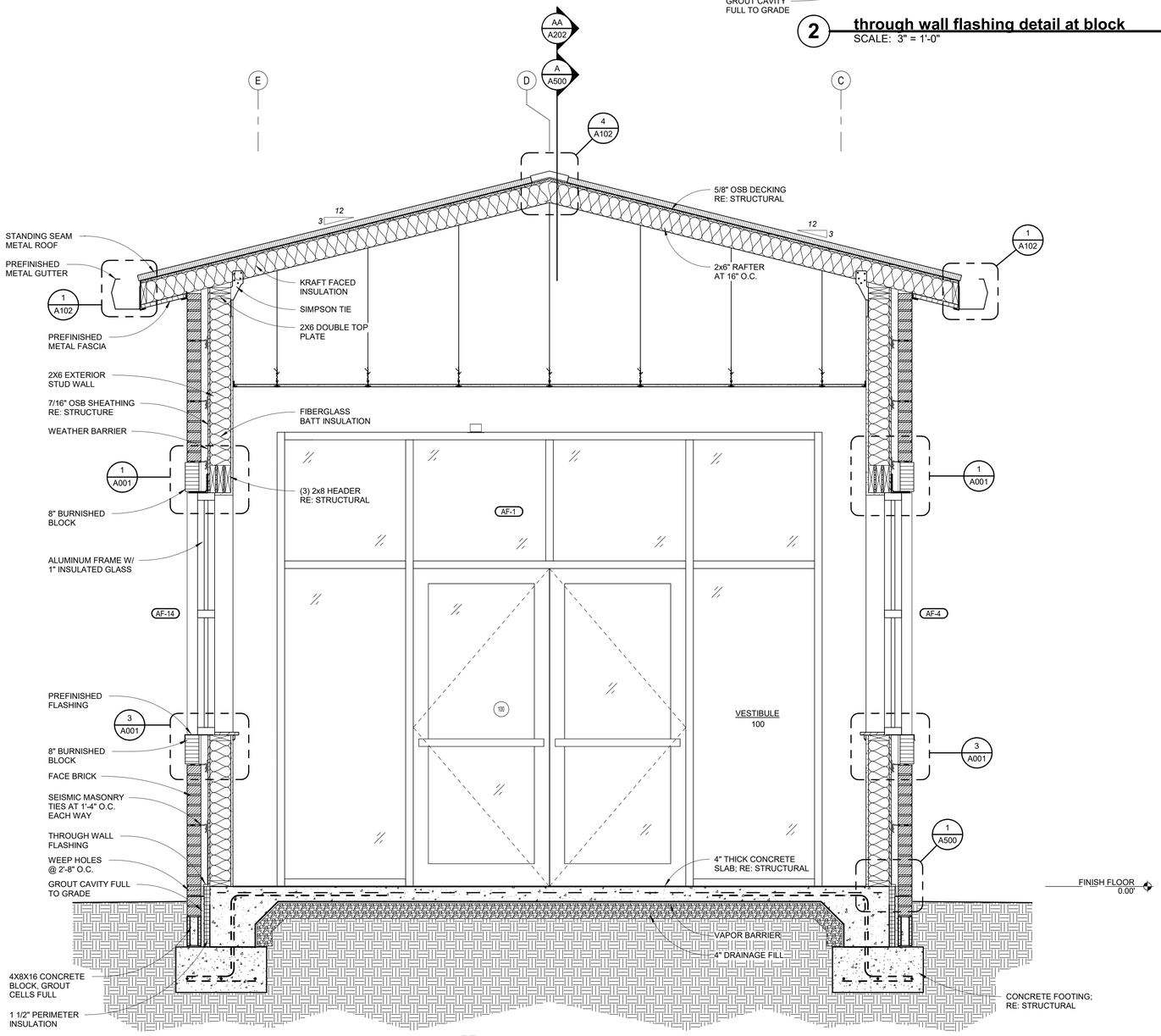


**B wall section**
SCALE: 3/4" = 1'-0"

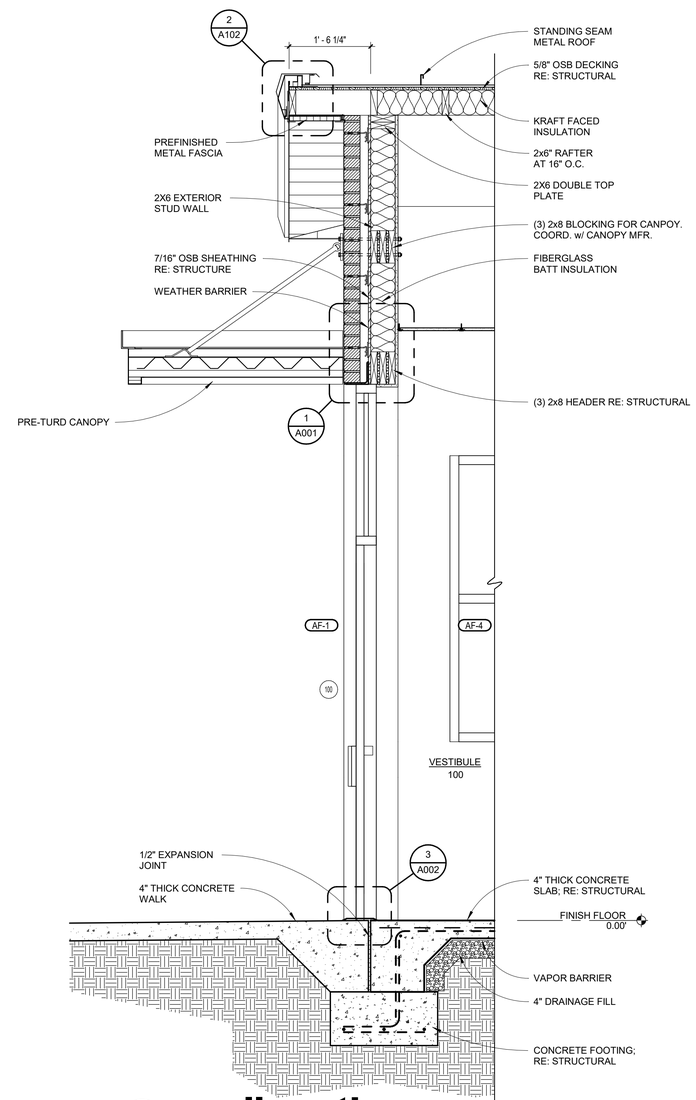


**A wall section**
SCALE: 3/4" = 1'-0"

C:\Users\toddw\Documents\2237 Poinsett Annex CD 07-31-24_Toddwalton.rvt
9/7/2024 8:14:49 AM

POINSETT COUNTY COURTHOUSE ANNEX
**POINSETT COUNTY**
**Harrisburg, Arkansas**


BRACKETT KRENNERICH architects
100 East Huntington Ave. Suite D P.O. Box 1655 870-932-0571 Fax 870-932-0975 www.bkarchts.com


| Revision Schedule | | | |
|---|---|---|---|
| Tag | Rev. Description | Rev. Date | Issued by |

BRACKETT & KRENNERICH ARCHITECTS, P.A. REGISTERED ARCHITECTS C13 26 JULY 2024 ARKANSAS

Commission Number 2237

A500

Date: July 26, 2024

WALL SECTIONS

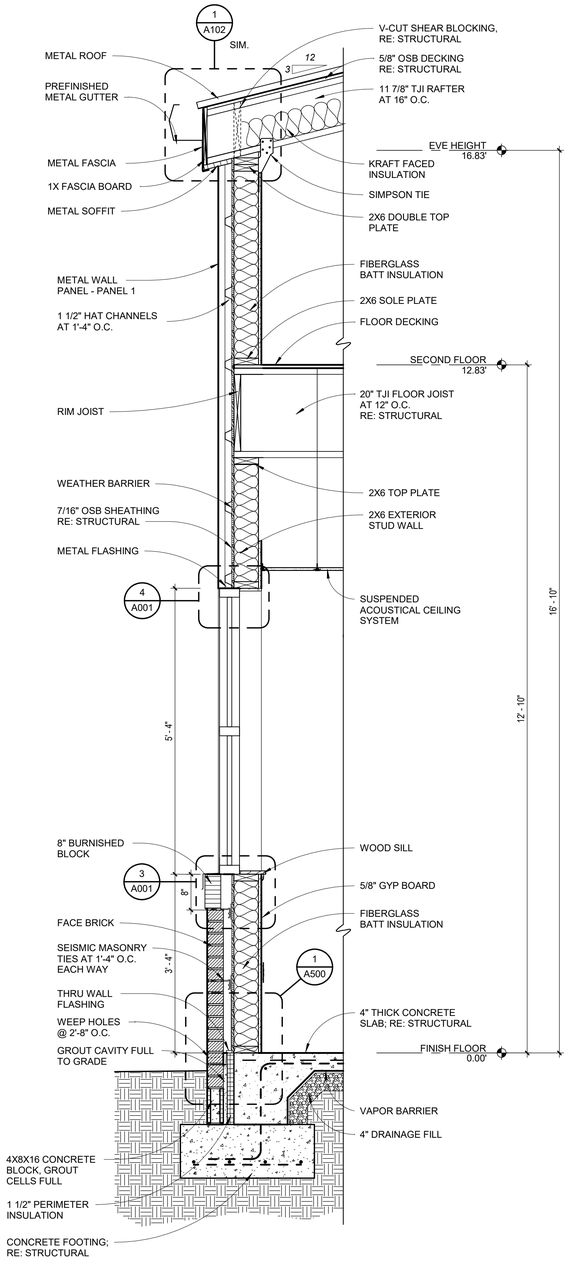


**C** wall section
SCALE: 3/4" = 1'-0"

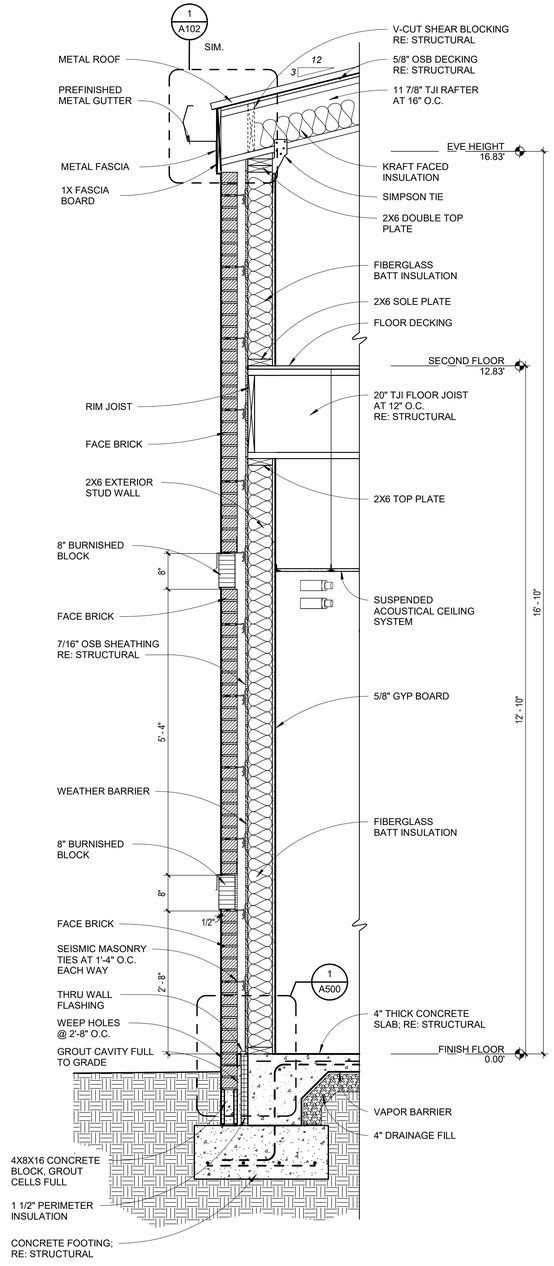


**B** wall section
SCALE: 3/4" = 1'-0"

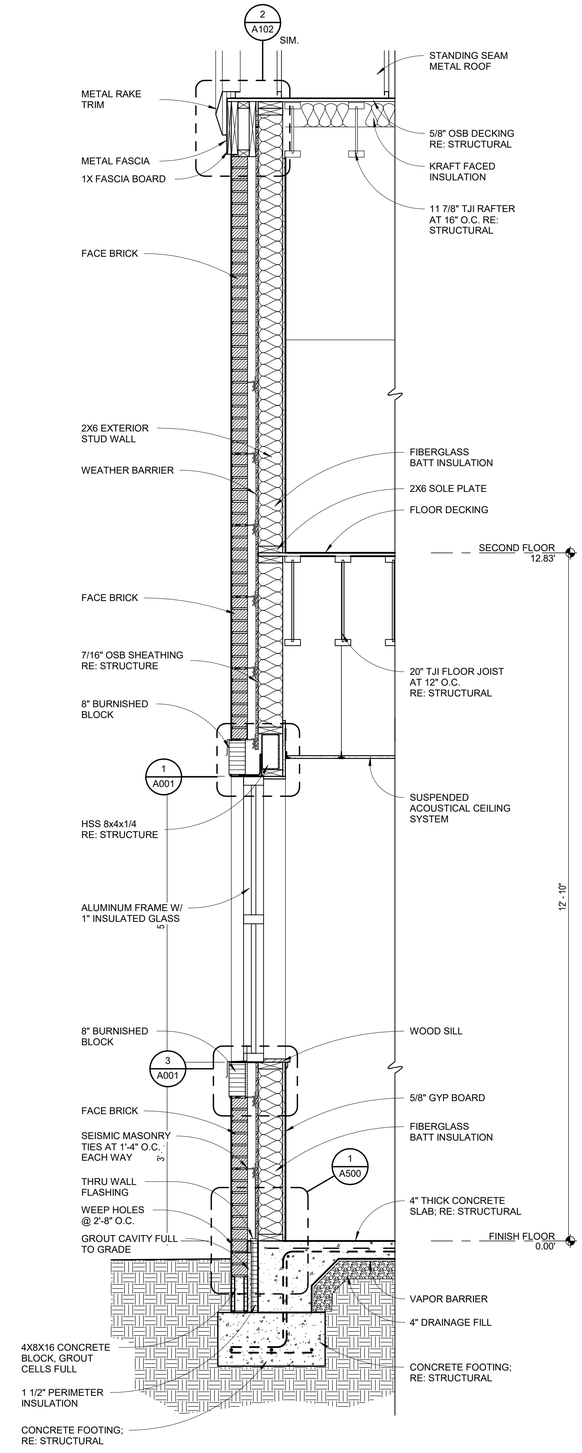


**A** wall section
SCALE: 3/4" = 1'-0"

POINSETT COUNTY COURTHOUSE ANNEX

# POINSETT COUNTY

Harrisburg, Arkansas


BRACKETT KRENNERICH architects
100 East Huntington Ave. Suite D P.O. Box 1655
870-932-0571 Fax 870-932-0975
www.bkarchts.com


| Revision Schedule | | | |
|---|---|---|---|
| Tag | Rev. Description | Rev. Date | Issued by |

BRACKETT-KRENNERICH & ASSOCIATES, P.A.
REGISTERED ARCHITECTS
C13
26 JULY 2024
ARKANSAS

Commission Number
2237

A501

Date: July 26, 2024

WALL SECTIONS

C:\Users\toddw\Documents\2237 Poinsett Annex CD 07-31-24
CENTRAL_toddwatson.rvt
8/7/2024 8:14:50 AM

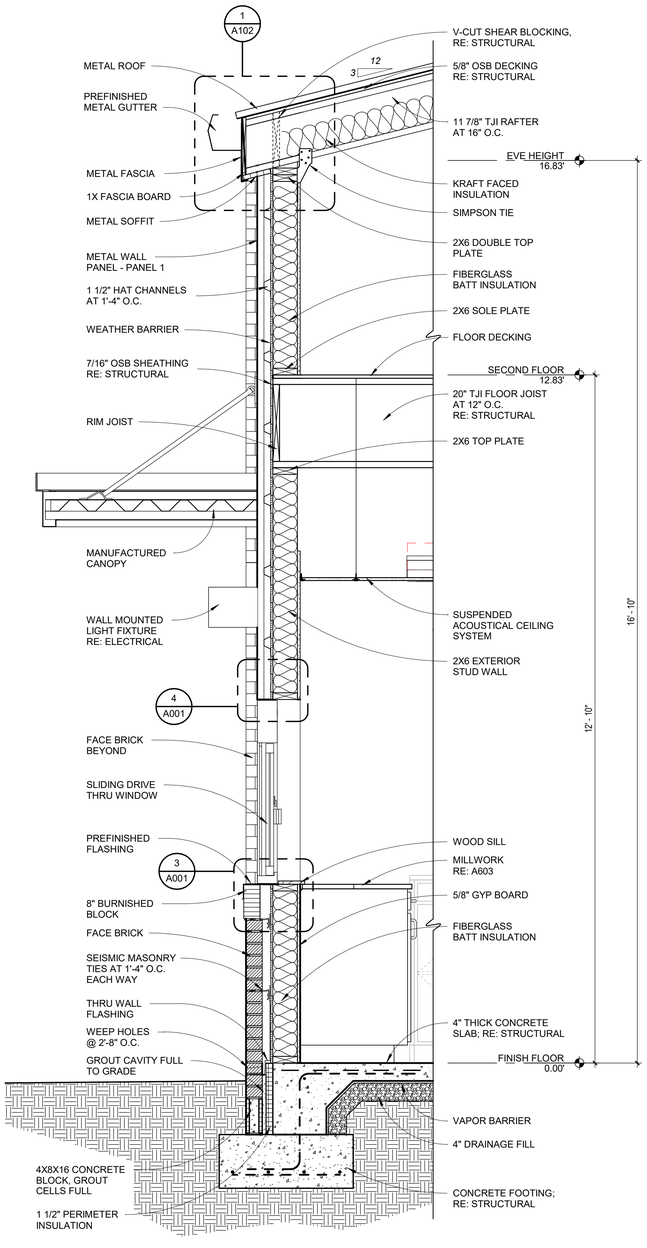


## C wall section

SCALE: 3/4" = 1'-0"

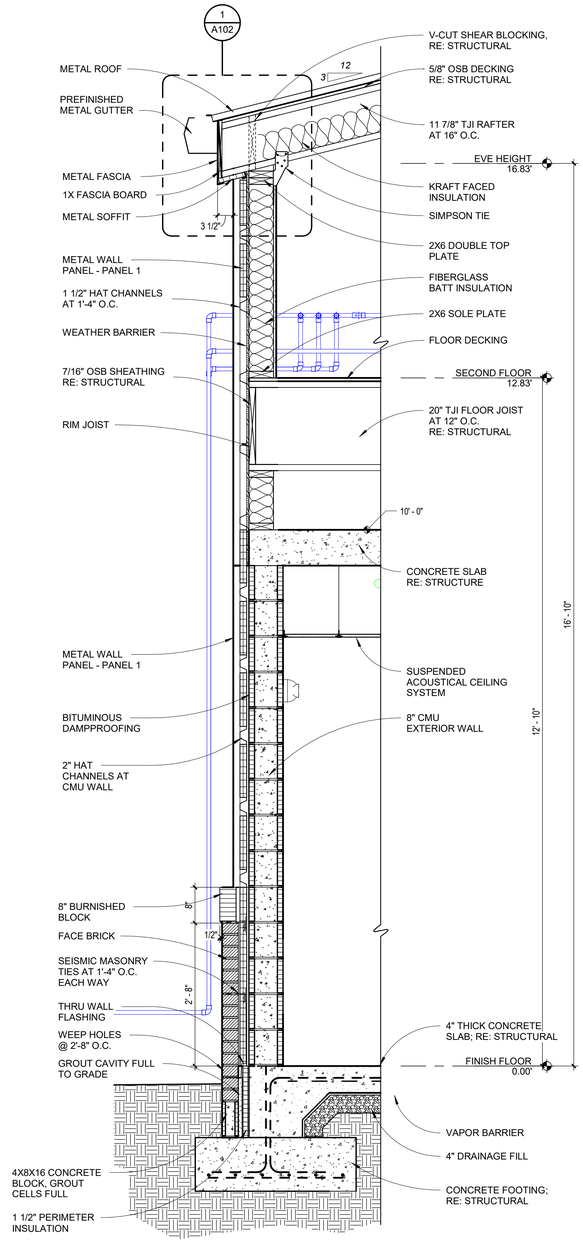


## B wall section

SCALE: 3/4" = 1'-0"

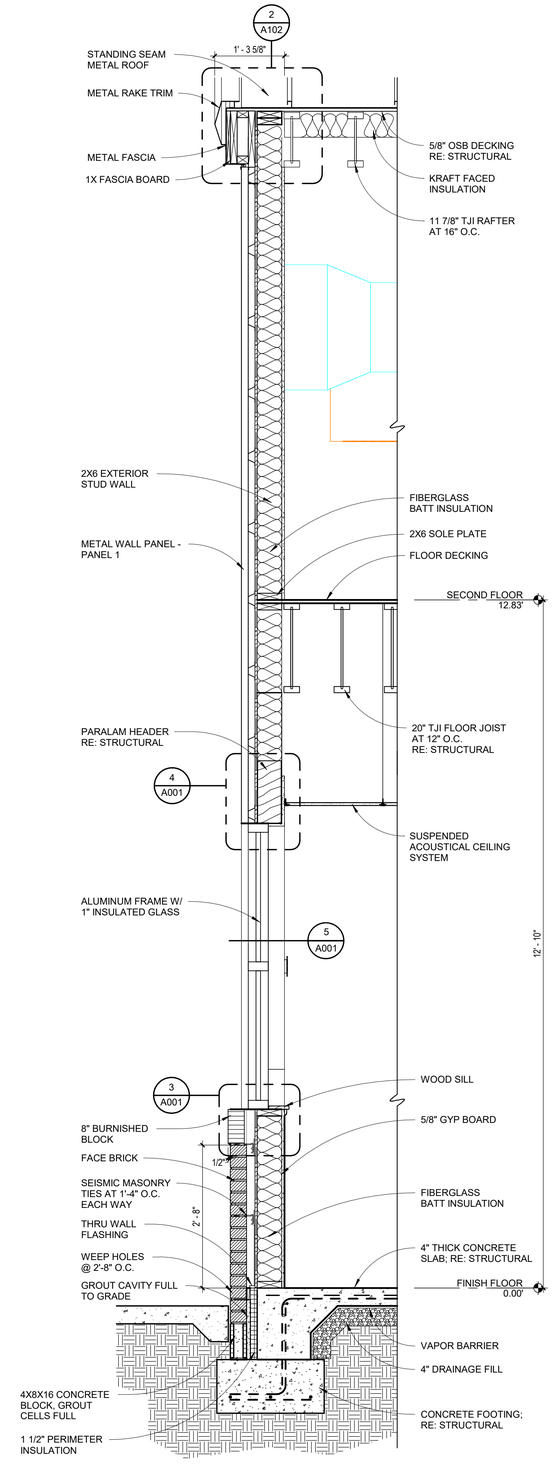


## A wall section

SCALE: 3/4" = 1'-0"

# POINSETT COUNTY COURTHOUSE ANNEX

# POINSETT COUNTY

## Harrisburg, Arkansas

BRACKETT KRENNERICH architects
100 East Huntington Ave. Suite D P.O. Box 1655
870-932-0571 Fax 870-932-0975
www.bkarchts.com

| Revision Schedule | | | |
|---|---|---|---|
| Tag | Rev. Description | Rev. Date | Issued by |

BRACKETT KRENNERICH & ASSOCIATES, P.A.
REGISTERED ARCHITECTS
C13
26 JULY 2024
ARKANSAS

Commission Number 2237

A502

Date: July 26, 2024

WALL SECTIONS

C:\Users\toddw\Documents\2237 Poinsett Annex CD 07-31-24 Central_toddwarch.rvt
8/7/2024 8:14:51 AM

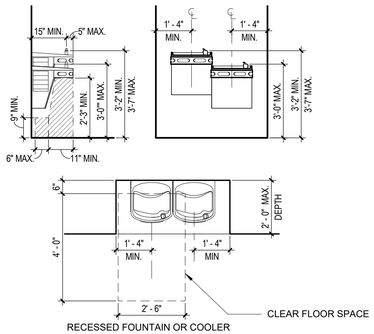


## water cooler clearances

3/8" = 1'-0"

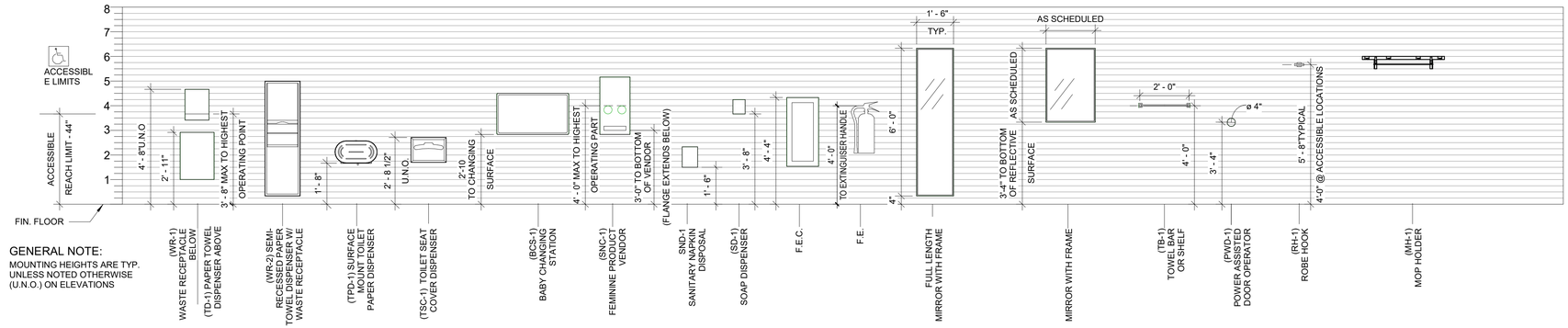


GENERAL NOTE:
MOUNTING HEIGHTS ARE TYP. UNLESS NOTED OTHERWISE (U.N.O.) ON ELEVATIONS

TYPICAL MOUNTING HEIGHTS

## standard mounting heights for accessories

3/8" = 1'-0"

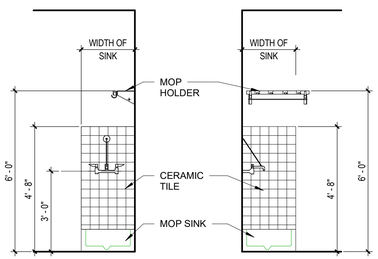


## janitor closet elevations

3/8" = 1'-0"

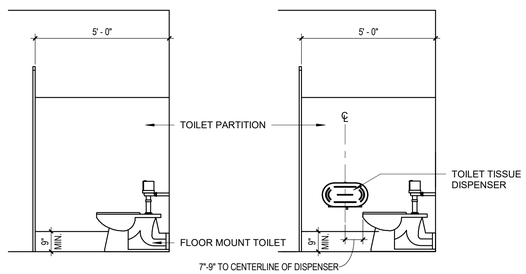


TYP. TOILET STALL SIDE ELEV. "B"(OPPOSITE "A")

TYP. TOILET STALL SIDE ELEV. "A"

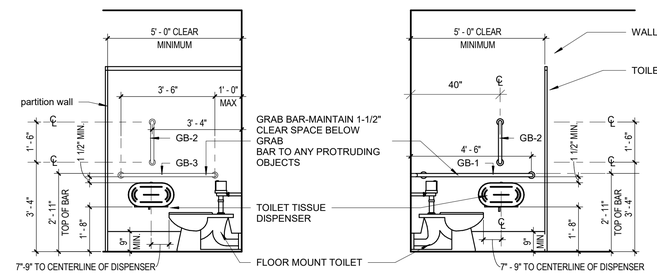


AMBULATORY TOILET STALL SIDE ELEV

ACCESSIBLE TOILET STALL SIDE ELEVATION
ELEVATION AT ADA STALL ALSO APPLIES TO TOILET ROOMS

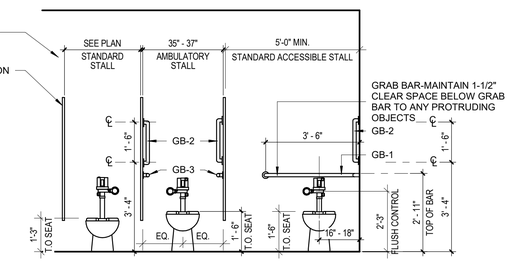


TOILET STALL ELEVATION
ELEVATION AT ADA STALL ALSO APPLIES TO TOILET ROOMS

## toilet stall elevations

3/8" = 1'-0"

| TOILET ACCESSORIES LEGEND | |
|---|---|
| GB-1 _____ | GRAB BAR *(42"x 54" 'L' SHAPED)* |
| GB-2 _____ | GRAB BAR *(18" LONG)* |
| MR-1 _____ | 24"W x 36"H MIRROR |
| DT-1_____ | FOLD-DN DIAPER CHANGING TABLE |
| MH-1_____ | MOP HANGER |
| HD-1_____ | ELECTRIC HAND DRYER |
| SD-1_____ | SOAP DISPENSER |
| TPD-1_____ | TOILET PAPER DISPENSER |
| SND-1_____ | SANITARY NAPKIN DISPOSAL |

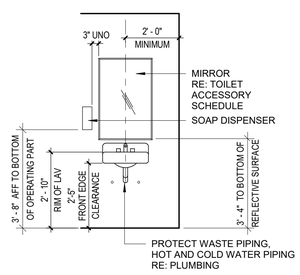


## typical lavatory elevation

3/8" = 1'-0"

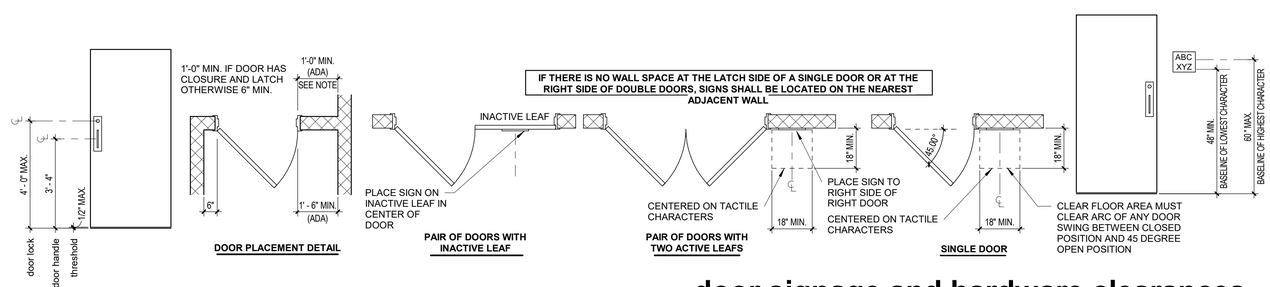


## door signage and hardware clearances

3/8" = 1'-0"

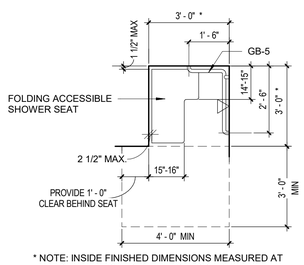


* NOTE: INSIDE FINISHED DIMENSIONS MEASURED AT THE CENTER POINTS OF THE OPPOSING SIDES

**TRANSFER SHOWER STALL**

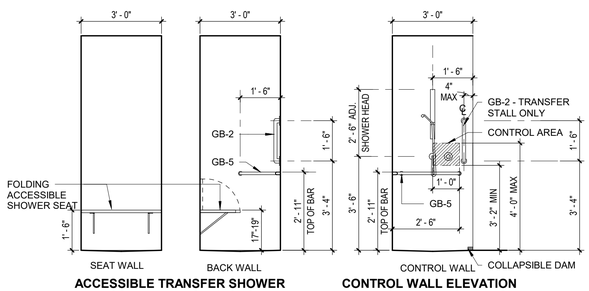


**ACCESSIBLE TRANSFER SHOWER STALL ELEVATIONS**

**CONTROL WALL ELEVATION FOR TRANSFER AND ROLL-IN STALLS**

## typical shower layout

3/8" = 1'-0"

## GENERAL NOTES:

1. THE INFORMATION PRESENTED ON THIS SHEET IS A **GUIDE** TO MEETING THE REQUIREMENTS OF THE ADA & THE AUTHORITY HAVING JURISDICTION AS THEY APPLY TO THIS PROJECT. THIS INFORMATION IS INTENDED TO BE NO LESS RESTRICTIVE THAN THE REQUIREMENTS PRESENTED IN THE ADA ACCESSIBILITY GUIDLINE (ADAAG). IN SOME CASES WHERE THEY ARE MORE RESTRICTIVE, THE CRITERIA PRESENTED
   HERE SHALL BE FOLLOWED. SOME OF THE TOILET ACCESSORIES ILLUSTRATED HERE ARE BASED ON PRODUCTS MANUFACTURED BY A SPECIFIC COMPANY BUT THIS IN NO WAY IS MEANT TORESTRICT THE USE
   OF PRODUCTS OF OTHER MANUFACTURERS AS MAY BE PERMITTED BY THE PROJECT MANUAL & SPECIFICATION. ALL DIMENSIONS MUST BE COORDINATED & REVIEWED WITH OWNER SUPPLIED ACCESSORIES.
   CONTRACTORS & SUPPLIERS SHALL NOTIFY THE ARCHITECT IF THEY BELIEVE A PRODUCT SPECIFIED OR AN INSTALLATION DETAIL TO BE CONTRARY TO THE MINIMUM REQUIREMENTS OF THE ADAAG AND THE AUTHORITY HAVING JURISDICTIONS CODES.
2. THE SERVICE OR OPERATING POINT FOR ALL INSTALLED TOILET ROOM EQUIPMENT OR ACCESSORIES SHALL BE MOUNTED NOT MORE THAN 44"AFF.
3. NO CONSTRUCTION OR EQUIPMENT SHALL BE INSTALLED WHICH DIMINISHES AN ACCESSIBLE ROUTE TO LESS THAN 36" WIDE BY 80" HIGH.
4. NO OBJECT SHALL BE INSTALLED WHICH PROTRUDES MORE THAN 4" FROM THE WALL IF THE BOTTOM OF THE LEADING EDGE IS BETWEEN 27"& 80" ABOVE THE FINISHED FLOOR.
5. ALL GRAB BARS SHALL HAVE A 1-1/2" CLEAR FINGER SPACE BETWEEN THE WALL & THE GRAB BAR.
6. ALL GRATINGS LOCATED IN WALKING SURFACES SHALL HAVE SPACES NO GREATER THAN 1/2" WIDE IN ONE DIRECTION & WHERE ELONGATED OPENINGS ARE PROVIDED THEY SHALL BE PLACED SO THAT THE LONG DIRECTION IS PERPENDICULAR TO THE DOMINANT DIRECTION OF TRAVEL.
7. NO RAMP SHALL BE CONSTRUCTED WITH A SLOPE GREATER THAN 7.5% IN THE DIRECTION OF TRAVEL AND A CROSS SLOPE GREATER THAN 1.5%.
8. REFER TO SPECIFICATION SECTION 10 2813 TOILET ACCESSORIES FOR MODEL NUMBERS AND TOILET PLANS FOR ACCESSORY LOCATIONS.
9. A FLOOR SLOPE LESS THAN 1:20 IS NOT A RAMP. CROSS SLOPES CANNOT EXCEED 1.5%.
10. CHANGES IN LEVEL BETWEEN 1/4" INCH AND 1/2" SHALL BE BEVELED WITH A SLOPE NO GREATER THAN 1:2.
11. SEE ENLARGED TOILET PLANS AND ELEVATIONS FOR INDIVIDUAL TOILET ROOM ACCESSORY LOCATIONS AND MOUNTING HEIGHTS.

C:\Users\todds\Documents\2237 Poinsett Annex CD 07-31-24 central_sdh.rvt
8/7/2024 8:14:52 AM

POINSETT COUNTY COURTHOUSE ANNEX
**POINSETT COUNTY**
Harrisburg, Arkansas


BRACKETT KRENNERICH architects
100 East Huntington Ave. Suite D P.O. Box 1655
870-932-0571 Fax 870-932-0975 www.bkarchts.com


| Revision Schedule | | | |
|---|---|---|---|
| Tag | Rev. Description | Rev. Date | Issued by |

BRACKETT-KRENNERICH & ASSOCIATES, P.A.
REGISTERED ARCHITECTS
C13
26 JULY 2024
ARKANSAS

Commission Number 2237

A600

Date: July 26, 2024

STANDARD MOUNTING HEIGHTS, ADA NOTES

| TOILET ACCESSORIES LEGEND | |
|---|---|
| GB-1 _____ | GRAB BAR *(42"x 54" 'L' SHAPED)* |
| GB-2 _____ | GRAB BAR *(18" LONG)* |
| MR-1 _____ | 24"W x 36"H MIRROR |
| DT-1_____ | FOLD-DN DIAPER CHANGING TABLE |
| MH-1_____ | MOP HANGER |
| HD-1_____ | ELECTRIC HAND DRYER |
| SD-1_____ | SOAP DISPENSER |
| TPD-1_____ | TOILET PAPER DISPENSER |
| SND-1_____ | SANITARY NAPKIN DISPOSAL |

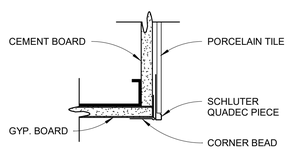


## 2 tile corner detail
SCALE: 3" = 1'-0"

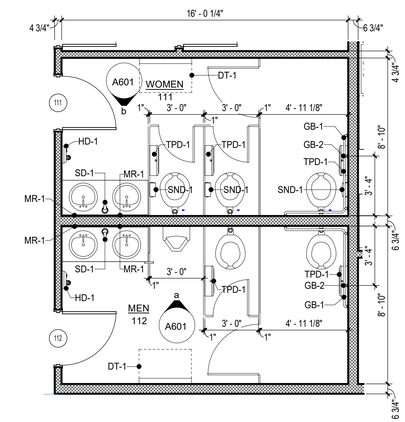


## men 112 & women 111
SCALE: 1/4" = 1'-0"

TRUE NORTH

BUILDING NORTH

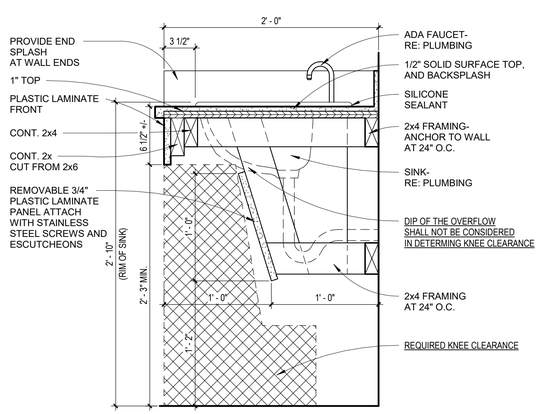


## 1 ADA vanity detail
SCALE: 1 1/2" = 1'-0"

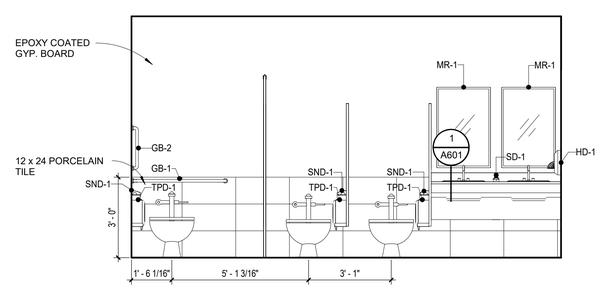


## b womens 111
3/8" = 1'-0"

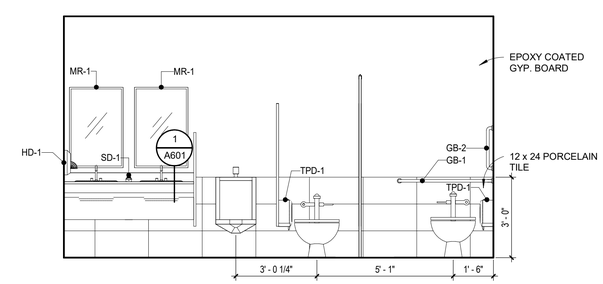


## a mens 112
3/8" = 1'-0"

C:\Users\toddw\Documents\2237 Poinsett Annex CD 07-31-24 Central_toddwarch.rvt
8/7/2024 8:14:53 AM

POINSETT COUNTY COURTHOUSE ANNEX

# POINSETT COUNTY

Harrisburg, Arkansas

BRACKETT KRENNERICH architects
100 East Huntington Ave. Suite D P.O. Box 1655
870-932-0571 Fax 870-932-0975
www.bkarchts.com

| Tag | Rev. Description | Rev. Date | Issued by |
|---|---|---|---|
| | | | |

Revision Schedule

BRACKETT KRENNERICH & ASSOCIATES, P.A. REGISTERED ARCHITECTS C13 26 JULY 2024 ARKANSAS

Commission Number 2237

A601

Date: July 26, 2024

ENLARGED TOILET PLANS, TOILET ELEVATIONS

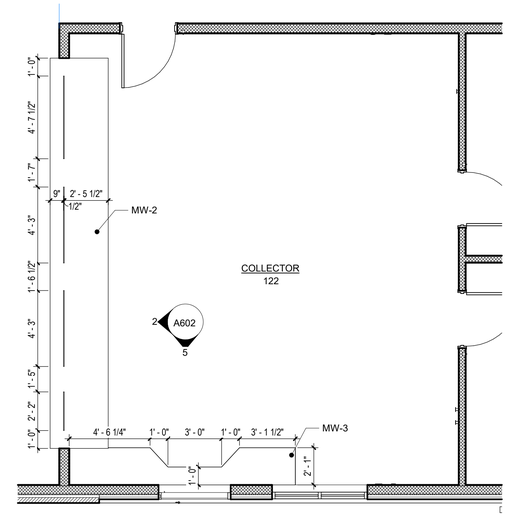


TRUE NORTH  BUILDING NORTH

## enlarged millwork plan

SCALE: 1/4" = 1'-0"

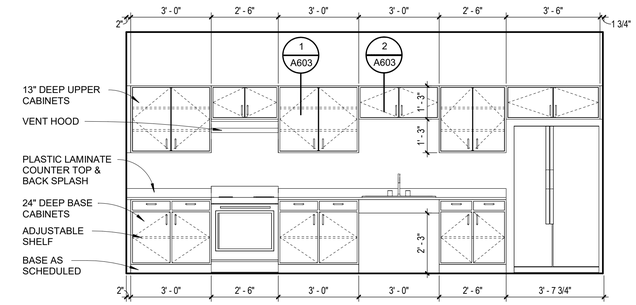


## millwork 4

3/8" = 1'-0"

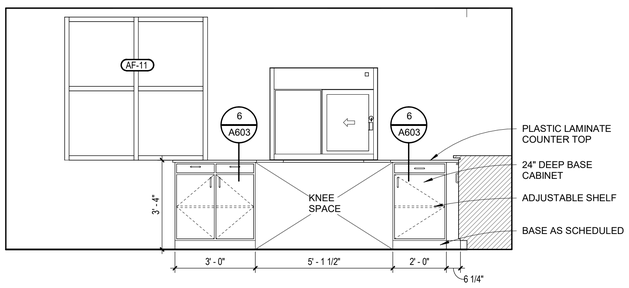


## millwork 3

3/8" = 1'-0"

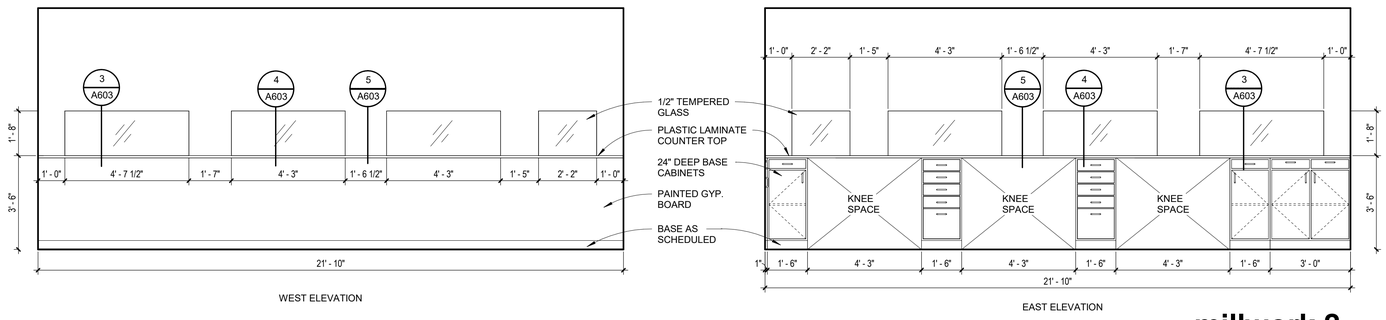


## millwork 2

3/8" = 1'-0"

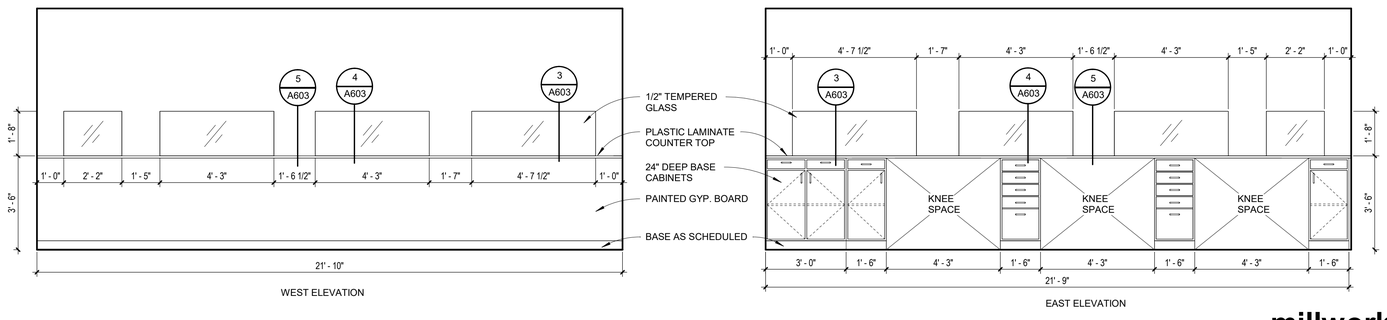


## millwork 1

3/8" = 1'-0"

POINSETT COUNTY COURTHOUSE ANNEX

# POINSETT COUNTY

Harrisburg, Arkansas

BRACKETT KRENNERICH architects

100 East Huntington Ave. Suite D P.O. Box 1655  870-932-0571  Fax 870-932-0975  www.bkarchts.com

| Revision Schedule | | | |
|---|---|---|---|
| Tag | Rev. Description | Rev. Date | Issued by |

BRACKETT-KRENNERICH & ASSOCIATES, P.A.
REGISTERED ARCHITECTS
C13
26 JULY 2024
ARKANSAS

Commission Number
2237

A602

Date: July 26, 2024

MILLWORK ELEVATIONS

C:\Users\todds\Documents\2237 Poinsett Annex CD 07-31-24 central_todds_ch.rvt
8/7/2024 8:14:54 AM

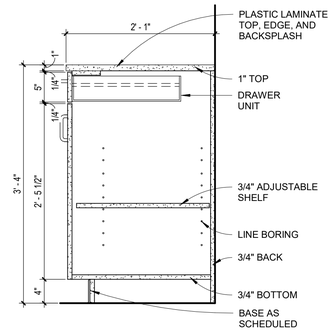


**6** cabinet section
SCALE: 1" = 1'-0"

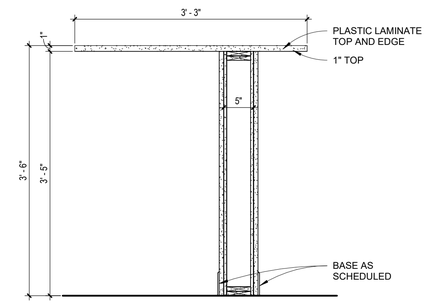


**5** cabinet section
SCALE: 1" = 1'-0"

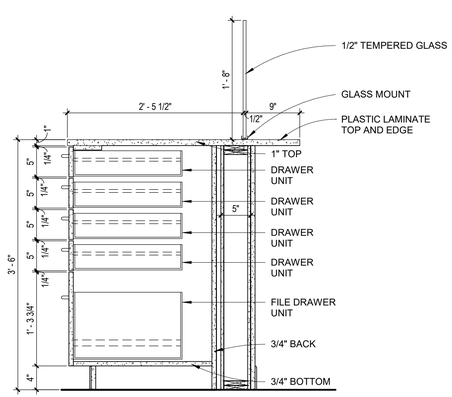


**4** cabinet section
SCALE: 1" = 1'-0"

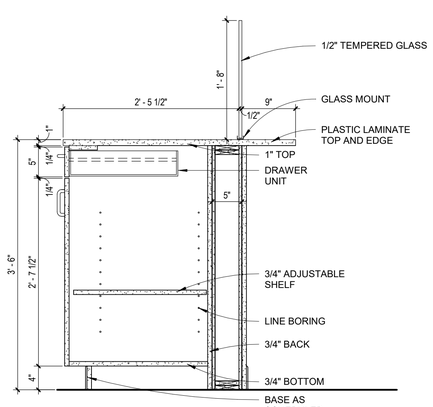


**3** cabinet section
SCALE: 1" = 1'-0"

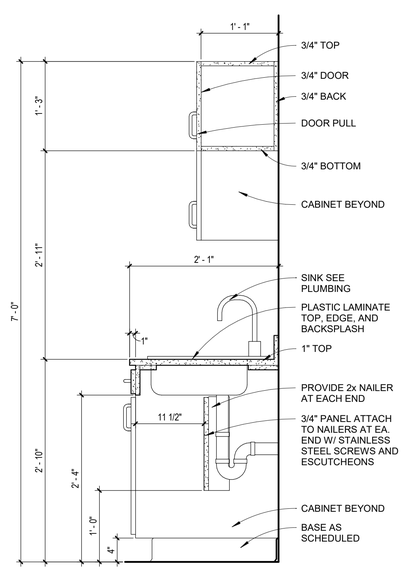


**2** cabinet section
SCALE: 1" = 1'-0"

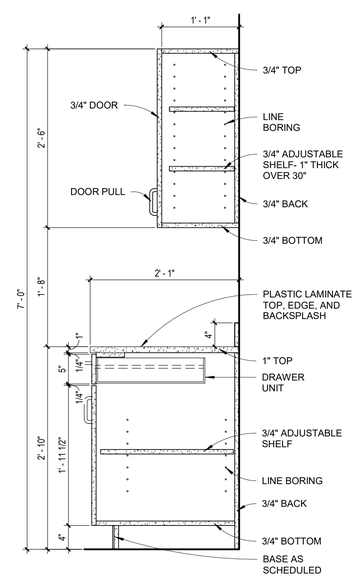


**1** cabinet section
SCALE: 1" = 1'-0"

POINSETT COUNTY COURTHOUSE ANNEX

# POINSETT COUNTY

Harrisburg, Arkansas

BRACKETT KRENNERICH architects
100 East Huntington Ave. Suite D P.O. Box 1655 870-932-0571 Fax 870-932-0975 www.bkarchts.com

| Revision Schedule | | | |
|---|---|---|---|
| Tag | Rev. Description | Rev. Date | Issued by |

BRACKETT KRENNERICH & ASSOCIATES, P.A.
REGISTERED ARCHITECTS
C13
26 JULY 2024
ARKANSAS

Commission Number
2237

A603

Date: July 26, 2024

MILLWORK SECTIONS

C:\Users\toddw\Documents\2237 Poinsett Annex CD 07-31-24
CD_Millwork_Kennerich.rvt
8/7/2024 8:14:54 AM

## WOOD NOTES:

**GENERAL:**

1. All framing lumber shall be No.2 Southern Pine unless noted otherwise.
2. All plywood shall be structural APA rated panels, Exposure I, conforming to Product Standard PS-1.
3. Standard cut washers shall be used under head and nuts against wood.
4. The anchors for plates shall be placed 8" from the end of a plate and at intervals noted on the plans.
5. Do not notch bottoms of wood members. Obtain architect/engineer approval for any holes in all wood members other than those required for structural assembly. Holes through sills, plates, studs, and double plates in interior bearing and shear walls shall not exceed 1/3 of the plate width and shall be bored holes placed in the center of the stud or plate. Notching is not permitted.
6. Nailed connections shall conform to Table 2304.9.1 of the International Building Code.
7. End distance, edge distance and spacing of nails shall be such to avoid splitting of the wood.
8. Nailing not noted shall be at least two nails at all contact points.
9. When headers are not shown, Table 2308.9.5 through 2308.9.6 of the International Building Code shall apply.

**BEAMS:**

1. Beams shall be comprised of solid sawn Southern Pine lumber unless noted otherwise. The size and grade of each beam shall be as shown on the plan.
2. Individual members comprising beams shall be adequately bonded together to act as a single unit.
3. All beams shall be supported by (3) - 2x6 No.2 SPF studs unless noted otherwise.
4. All beams shall be adequately anchored to prevent lateral and/or in-plane displacement.

**STUD WALLS:**

1. Studs shall be 2x6 No.2 SPF or better unless noted otherwise.
2. Stud spacing shall be 16" O.C. unless noted otherwise.
3. All studs shall have blocking at the midpoint unless noted otherwise. Blocking shall consist of solid sawn lumber of the same size as the studs being blocked.

**PLYWOOD SHEAR WALLS:**

1. OSB panels shall be placed with long dimensions parallel to wall studs.
2. Nailing schedule: (unless otherwise noted)
   A. 8d @ 3" O.C. at panel edges and framed openings.
   B. 8d @ 6" O.C. at intermediate studs and blocking.
3. Shear wall locations shall be as shown on the plan.

**PLYWOOD ROOF DECK:**

1. OSB panels to be placed with long dimensions perpindicular to supports.
2. Provide double 2x shaped blocking along main ridge lines, valleys and all hip ridges.
3. Nailing schedule:
   A. 8d @ 6" O.C. around roof perimeter at eave, gable ends, and at each side of main ridge lines and valleys.
   B. 8d @ 6" O.C. at all other panel edges.
   C. 8d @ 12" O.C. in panel field @ each rafter.

**PARALLAM BEAMS:**

1. All members shall be manufactured in accordance with US Department of Commerce voluntary standard PS 56-73, AITC standard 117-79, National Service, Inc. (NES) report number NER-292, or CC MC report number 111161-R, and other AITC standards.
2. Parallam beams shall be manufactured from strands of wood fiber and shall be coated with exterior type adhesive (phenol,(formaldehyde)) and oriented to the length of the member. Use parallam beams by Trusjoist McMillian or equal.
3. Parallam shall have the following properties:
   Flexural Stress, $f_b$ = 2,900 psi
   Tension Parallel to Grain, $f_t$ = 2,400 psi
   Compressive Strength, $f_c$ = 2,900 psi
   Horizontal Shear, $f_v$ = 210 psi
   Modulus of Elasticity, E = 2,000,000 psi
4. The parallam wood fabricator shall furnish shop drawings, unless noted otherwise, for review by the architect/engineer before fabrication.

## CONCRETE NOTES:

**GENERAL:**

1. All concrete shall have a minimum 28 day compressive strength, ($f'_c$), of 3,000 psi for footings and 4,000 psi for slabs.
2. All concrete work shall conform to the latest ACI specifications.
3. Coarse aggregate for concrete shall not contain lignite, steel, or other materials that may be detrimental to the concrete.
4. Fly ash in concrete mix shall not be permitted.
5. Horizontal construction joints shall be permitted only where shown on the structural drawings. Horizontal or near horizontal joints shall be prepared by roughening the surface in an approved manner so that the aggregate is exposed uniformly, leaving no laitance, loosened particles, or damaged concrete.
6. Contractor shall verify dimensions and locations of all openings, pipe sleeves, curbs, etc., as required by other trades before concrete is placed.
7. Pipes or conduit placed in foundation and slabs shall not be placed closer than 3 diameters on center. Aluminum conduits shall not be placed in concrete.
8. All footings shall bear on firm, undisturbed soil or an approved select fill material compacted to at least 95% of optimum density as determined by the Standard Compaction Test, ASTM D-698.
9. The design bearing capacity, $q_a$ =1,500 psf.
10. Location of slotted inserts, weld plates and all other items to be embedded in concrete shall be coordinated with architectural and mechanical drawings.

**REINFORCEMENT:**

1. All reinforcing steel shall conform to ASTM-615, Grade 60, $f_y$ =60 ksi.
2. Minimum cover on all reinforcing steel shall be 3".
3. All reinforcing bars splices shall be lap splices with a minimum overlap of 30".
4. All reinforcing steel shall be fabricated and placed per the latest edition of the ACI Building Code (ACI-318).
5. All reinforcement shall be securely held in place while placing concrete. If required, additional bars or stirrups shall be provided by the contractor to support all bars.
6. Reinforcing bars shall not be welded, unless specifically noted on the drawing, as being welded, welded reinforcement shall conform to ASTM A-706.
7. Provide corner bars in all walls and at wall intersections to match size and spacing of horizontal bars in those walls.

**WELDED WIRE FABRIC:**

1. All welded wire fabric shall conform to the latest edition of ASTM-185, Specifications for Welded Wire Fabric for Concrete Reinforcement.
2. All laps in welded wire fabric shall be one mesh plus 2 inches at splice.
3. Welded wire fabric shall be provided in flat sheets. Roll wire shall not be permitted.

## STRUCTURAL STEEL NOTES:

**GENERAL:**

1. All rolled wide flange shapes shall conform to ASTM A-992, $f_y$ =50 ksi.
2. All hollow structural shapes (HSS) shall conform to ASTM A-500, Grade B, $f_y$=46 ksi.
3. All plates shall conform to ASTM A-36, $f_y$ =36 ksi.
4. All misc. steel shall conform to ASTM A-36, $f_y$=36 ksi, unless noted otherwise.
5. All steel details shall be in accordance with the latest AISC Specifications (including AISC Seismic Provisions when applicable).
6. Splicing of structural steel members where not detailed is prohibited without prior approval. If approved, the contractor shall have the connection tested by ultrasound by an independent testing lab.
7. No change in size or position of the structural elements shall be made. Holes, slots, cuts, etc., are not permitted through any member unless they are detailed on the approved shop drawings.

**WELDS:**

1. All welding shall be performed by certified welders in accordance with AWS specifications.
2. All welding electrodes shall conform to AWS A5.1 Grade E-70.

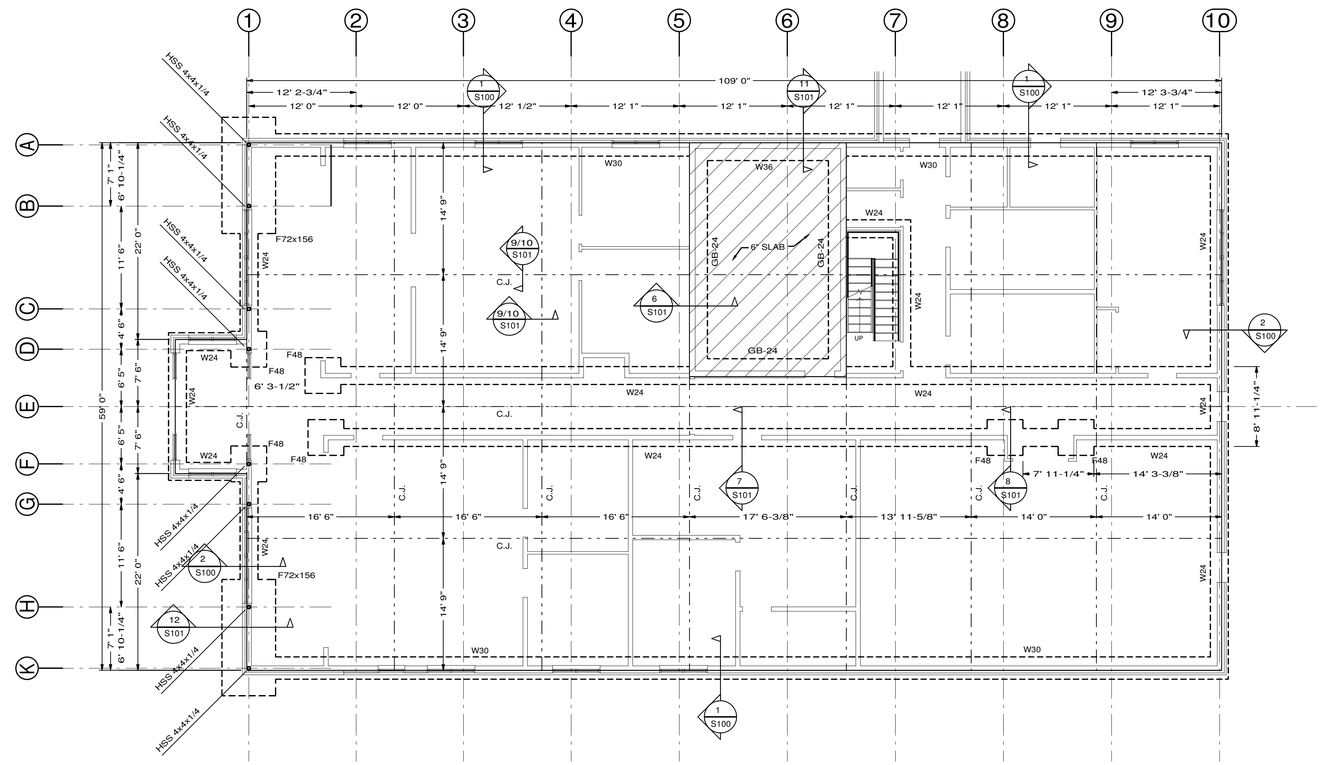


## FOUNDATION PLAN

*SCALE 1/8"=1'*

**SPREAD FOOTING SCHEDULE**

| FOOTING | DIMENSIONS | REINFORCEMENT DETAILS |
|---|---|---|
| F48 | 4'x4'x12" | (8) - #4 BARS @ 6" O.C. EACH WAY |
| F72x156 | 6'x13'x24" | (12)x(26) - #6 BARS @ 6" O.C. EACH WAY, TOP & BOTTOM |

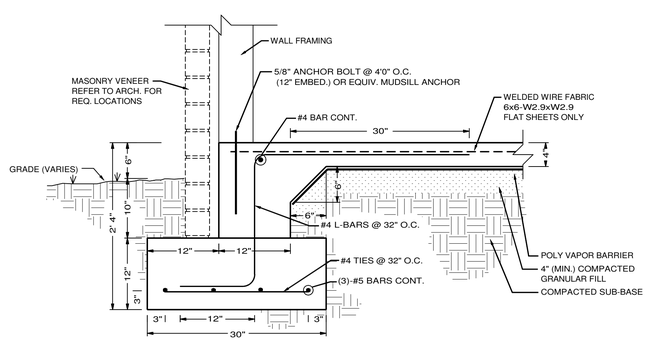


**1 EXTERIOR STRIP FOOTING SECTION (W30)**

*SCALE 1"=1'*

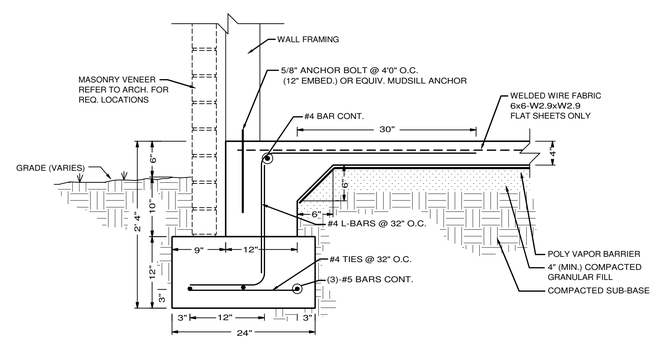


**2 EXTERIOR STRIP FOOTING SECTION (W24)**

*SCALE 1"=1'*

NEW OFFICE BUILDING
**POINSETT COUNTY**
Harrisburg, Arkansas


BRACKETT KRENNERICH architects
100 East Huntington Ave Suite D P.O. Box 1655
870-932-0571 Fax: 870-932-0975
www.bkarchts.com


Revision Schedule

| Tag | Rev. Description | Rev. Date | Issued by |
|---|---|---|---|
| | | | |

STATE OF ARKANSAS
REGISTERED PROFESSIONAL ENGINEER
No. 12043
MICHAEL D. SMITH
7/26/24


SMITH ENGINEERING CO.
CIVIL & STRUCTURAL
P.O.BOX 299 * MARION, AR 72364 * (870) 739-5533


Commission Number
0000

S100

Date July 26, 2024

FOUNDATION PLAN & DETAILS

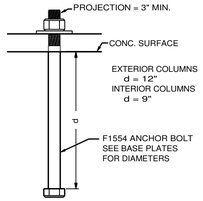


**1 TYP. ANCHOR BOLT**
*N.T.S.*

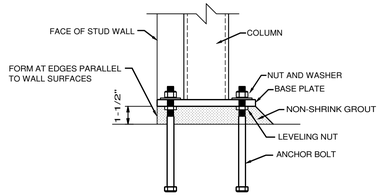


**2 ANCHOR BOLT PLACEMENT DETAIL**
*SCALE 1-1/2"=1'*

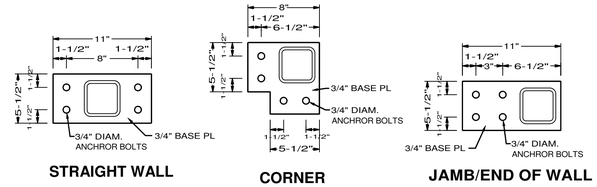


**3 HSS BASE PLATE**
*SCALE 1-1/2"=1'*

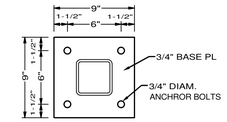


**4 INTERIOR COLUMN HSS BASE PLATE**
*SCALE 1-1/2"=1'*

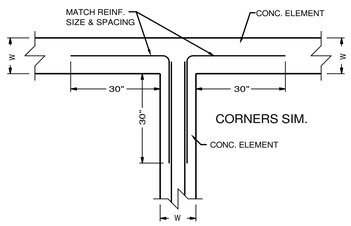


**5 PLAN REINFORCEMENT INTERSECTION**
*SCALE 1/2"=1'*

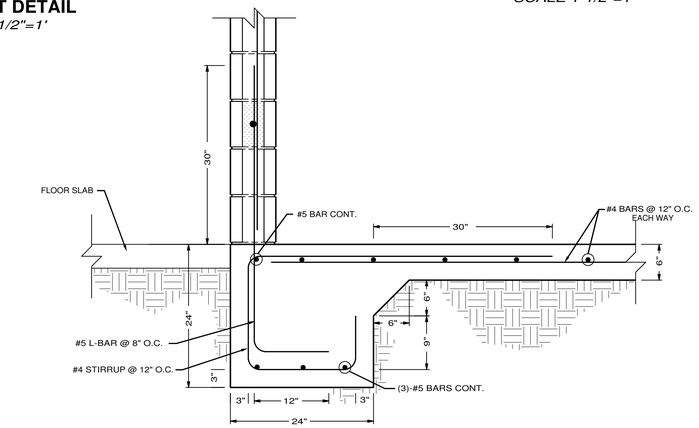


**6 SAFE ROOM INTERIOR FOOTING (GB-24)**
*SCALE 1"=1'*

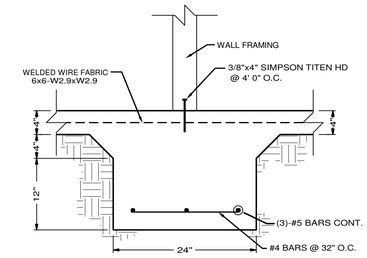


**7 INTERIOR FOOTING (W24)**
*SCALE 1"=1'*

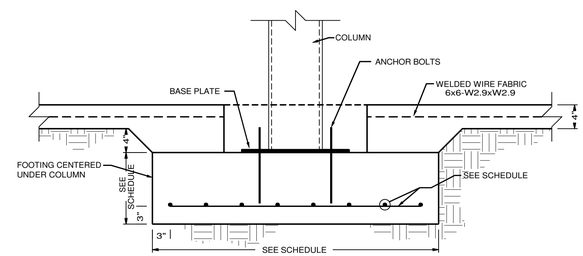


**8 SPREAD FOOTING @ INTERIOR COLUMN**
*SCALE 1"=1'*

NOTE TO CONTRACTOR:
CONTRACTOR IS RESPONSIBLE FOR JOINTS CRACKING AS SHOWN ON PLAN AND DETAIL. SAWING JOINTS SHALL BEGIN AS SOON AS THE SURFACE IS FIRM ENOUGH SO THAT IT WILL NOT BE TORN OR DAMAGED BY THE BLADE. SLABS MUST BE SAWN ON SAME DAY SLAB IS POURED. DO NOT ALLOW SLAB TO CURE OVERNIGHT BEFORE SAWING.

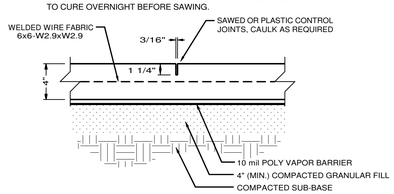


**9 SLAB CONTROL JOINT DETAIL**

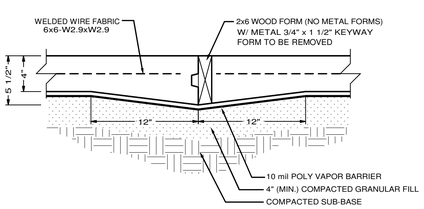


**10 SLAB CONSTRUCTION JOINT DETAIL**

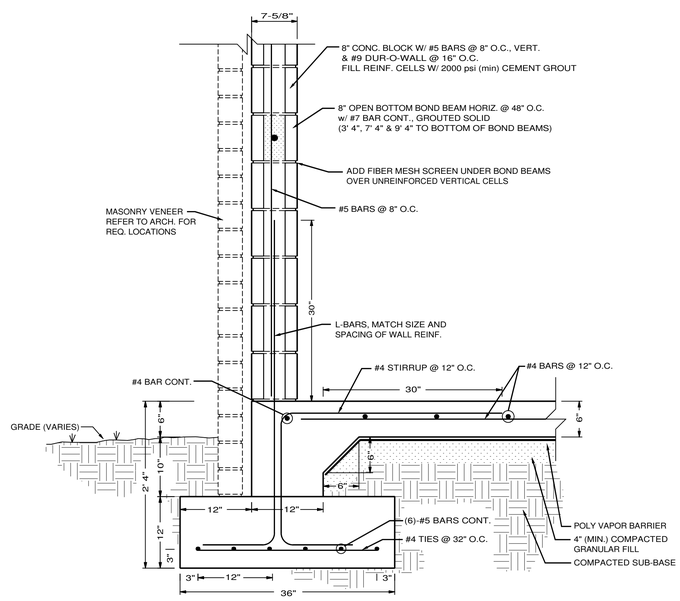


**11 EXTERIOR STRIP FOOTING SECTION AT CMU (W36)**
*SCALE 1"=1'*

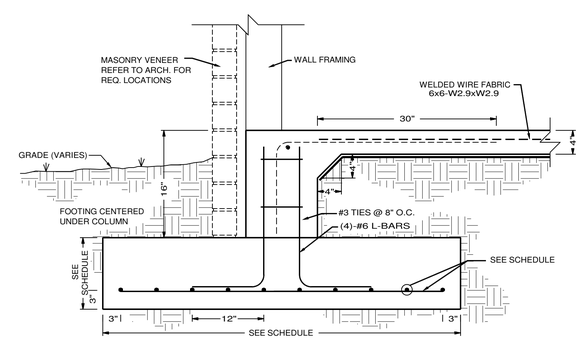


**12 EXTERIOR SPREAD FOOTING**
*SCALE 1"=1'*

SMITH ENGINEERING CO.
CIVIL & STRUCTURAL
P.O.BOX 299 * MARION, AR 72364 * (870) 739-5533

NEW OFFICE BUILDING
**POINSETT COUNTY**
Harrisburg, Arkansas

BRACKETT KRENERICH architects

Revision Schedule

| Tag | Rev. Description | Rev. Date | Issued by |
|---|---|---|---|
| | | | |

STATE OF ARKANSAS
REGISTERED PROFESSIONAL ENGINEER
No. 12043
MICHAEL D. SMITH
7/26/24

Commission Number
0000

S101

Date July 26, 2024

FOUNDATION DETAILS

100 East Huntington Ave Suite D P.O. Box 1655 870-932-0571 Fax: 870-932-0975 www.bkarchits.com

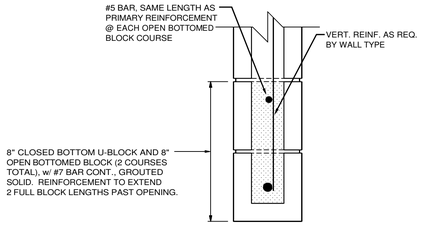


**1 LINTEL DETAIL**
*SCALE 1-1/2"=1'*

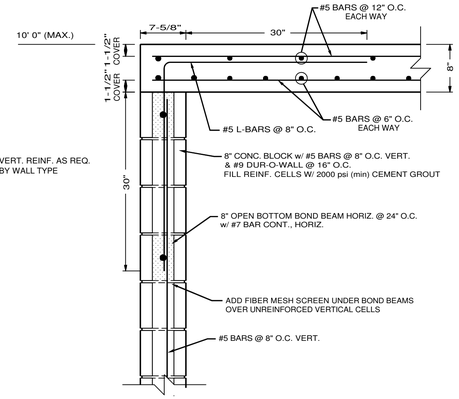


**2 SAFE ROOM SECTION**
*SCALE 1"=1'*

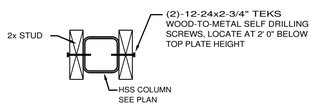


**3 STUD WALL/HSS COLUMN CONNECTION DETAIL**
*SCALE 1-1/2"=1'*

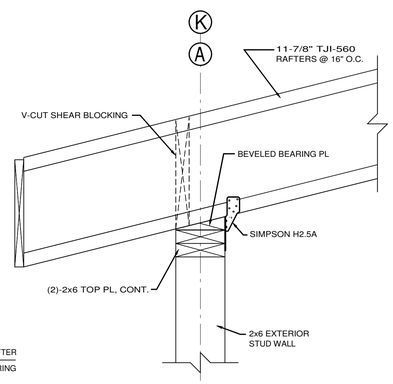


NOTE:
AT WALL ENDS, WALL INTERSECTIONS, AND OTHER POINTS OF CONFLICT, HOLDOWNS MAY BE INSTALLED ON THE INSIDE FACE OF SHEARWALL BOUNDARY CHORD MEMBER.

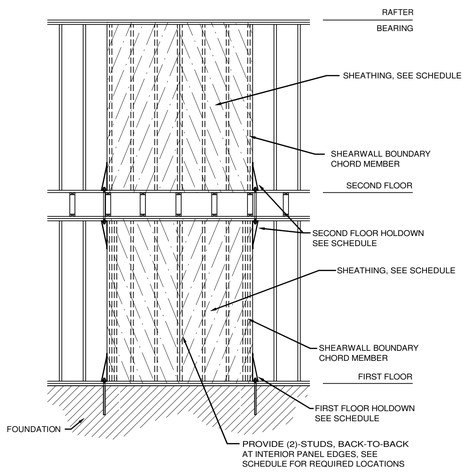


**4 WOOD SHEATHED SHEARWALL GENERAL CONFIGURATION DETAIL**
*SCALE 1/4"=1'*

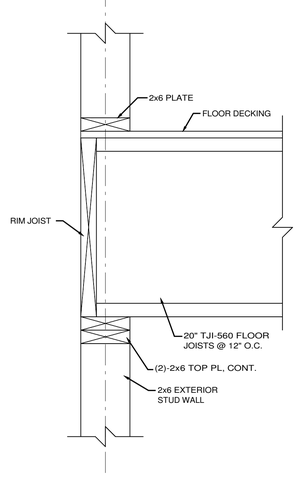


**5 WALL FRAMING SECTION**
*SCALE 1-1/2"=1'*

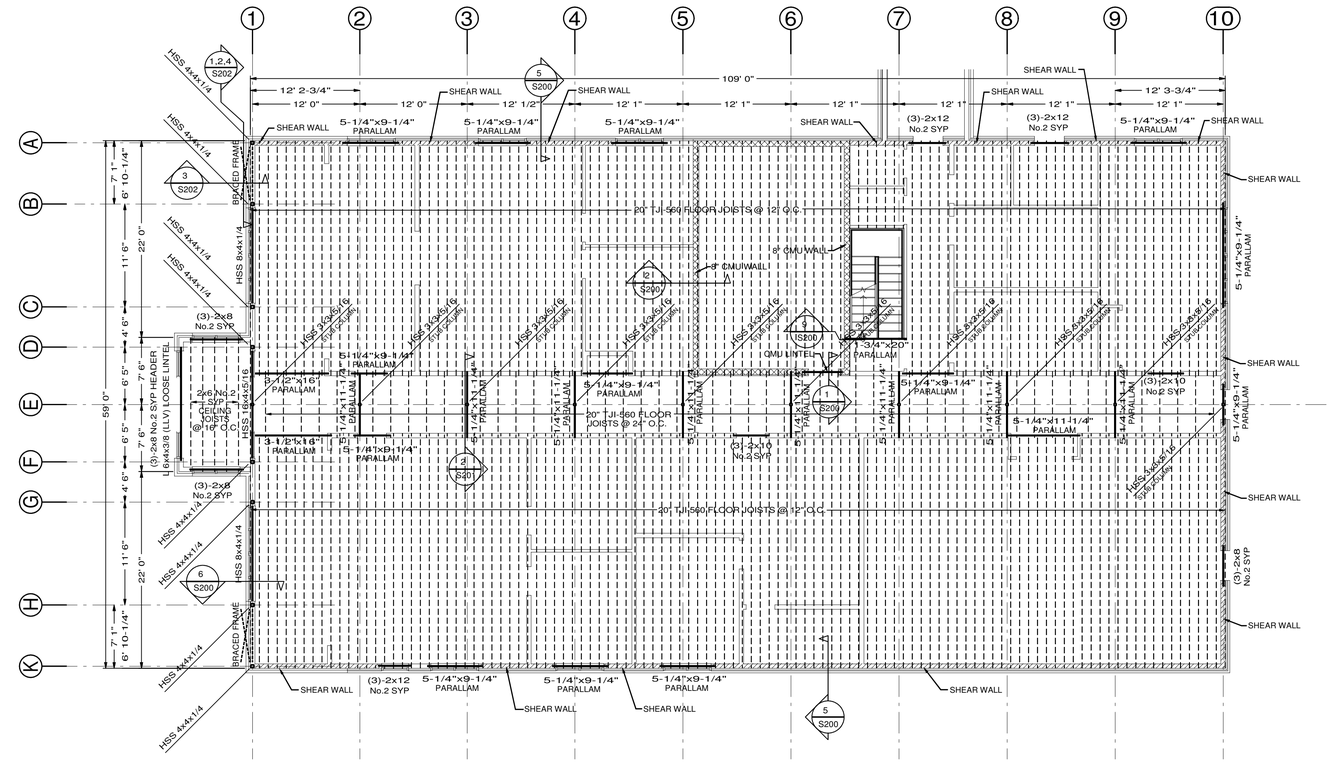


**FLOOR FRAMING PLAN**
*SCALE 1/8"=1'*

**MIN. LVL MATERIAL PROPERTIES**
Flexural Stress, $f_b$ = 2,900 psi
Tension Parallel to Grain, $f_t$ = 2,400 psi
Compressive Strength, $f_c$ = 2,900 psi
Horizontal Shear, $f_v$ = 210 psi
Modulus of Elasticity, E = 2,000,000 psi

**HOLDOWN SCHEDULE**

**SECOND FLOOR**
SIMPSON STRONG-TIE HDU2-SDS2.5
OR USP CONNECTORS PHD2A
HOLDOWNS WITH 5/8" DIAM. ANCHOR BOLTS
@ ENDS OF DESIGNATED SHEAR WALLS;
MUST BE INSTALLED WITH MIN. (2) STUDS.

**FIRST FLOOR**
SIMPSON STRONG-TIE HDU11-SDS2.5
OR USP CONNECTORS UPHD9
HOLDOWNS WITH 1" DIAM. ANCHOR BOLTS
@ ENDS OF DESIGNATED SHEAR WALLS;
MUST BE INSTALLED WITH MIN. (5) STUDS.

**SHEATHING SCHEDULE**

**SECOND FLOOR SHEATHING**
7/16" O.S.B. SHEATHING
EDGE NAILS = 8d @ 4" O.C.
FIELD NAILS = 8d @ 6" O.C.
MIN FASTNER PENETRATION = 1-3/8"

**FIRST FLOOR SHEATHING**
7/16" O.S.B. SHEATHING
EDGE NAILS = 8d @ 2" O.C.
FIELD NAILS = 8d @ 6" O.C.
MIN FASTNER PENETRATION = 1-3/8"
MUST UTILIZE DOUBLED STUDS
AT ALL PANEL EDGES

**DECKING SCHEDULE**

**FLOOR DECKING**
3/4" RATED DECKING
EDGE NAILS = 10d @ 4" O.C.
FIELD NAILS = 10d @ 12" O.C.
(3" x 0.148")

**ROOF DECKING**
5/8" O.S.B. RATED DECKING
EDGE NAILS = 10d (3"x0.148") @ 4" O.C.
FIELD NAILS = 10d (3"x0.148") @ 12" O.C.
PROVIDE BLOCKING @ ALL PANEL EDGES

**WALL FRAMING SCHEDULE**

**EXTERIOR WALL**
2x6 SPF No.2 @ 12" O.C. (MAX.)
FULLY SHEATHED w/ BLOCKING
@ 1/3 POINTS

**INTERIOR LOAD BEARING**
2x6 SPF No.2 @ 12" O.C. (MAX.)
w/ BLOCKING @ 1/3 POINTS

**LATERAL TIES**

RAFTER TIES
SIMPSON STRONG TIE H2.5A
OR USP CONNECTORS RT7A
@ EACH RAFTER

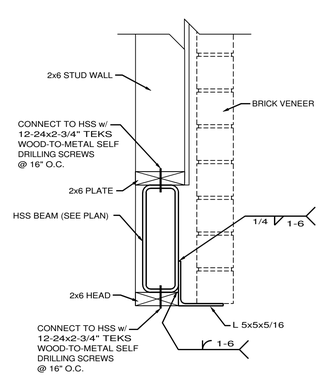


**6 HSS LINTEL SECTION**
*SCALE 1-1/2"=1'*

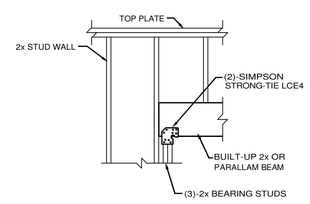


**7 WOOD BEAM BEARING DETAIL**
*SCALE 1/2"=1'*

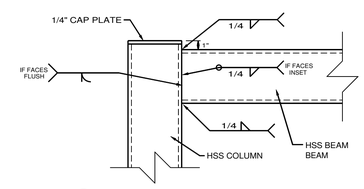


**8 BEAM-COLUMN CONNECTION**
*SCALE 1-1/2"=1'*

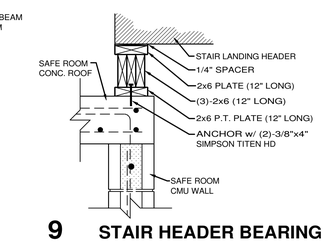


**9 STAIR HEADER BEARING**
*SCALE 1"=1'*

SMITH ENGINEERING CO.
CIVIL & STRUCTURAL
P.O.BOX 299 * MARION, AR 72364 * (870) 739-5533

NEW OFFICE BUILDING
**POINSETT COUNTY**
Harrisburg, Arkansas

BRACKETT KRENNERICH architects
100 East Huntington Ave Suite D P.O. Box 1655 870-932-0571 Fax: 870-932-0975 www.bkarchts.com

| Revision Schedule | | | |
|---|---|---|---|
| Tag | Rev. Description | Rev. Date | Issued by |
| | STAIR LANDING FRAMING & DETAIL | 8-5-24 | |

STATE OF ARKANSAS
REGISTERED PROFESSIONAL ENGINEER
No. 12043
MICHAEL D. SMITH
7/26/24

Commission Number
0000

S200

Date July 26, 2024

FRAMING PLAN & DETAILS

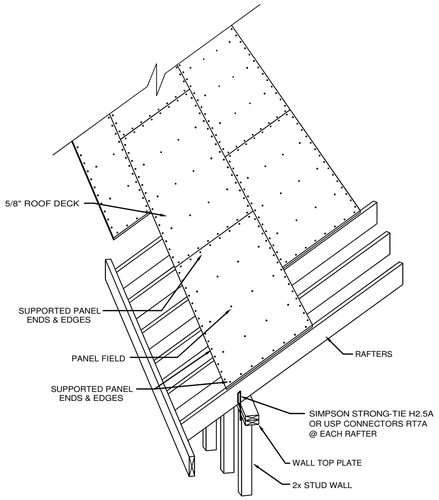


**1 DETAIL OF ROOF DECKING**

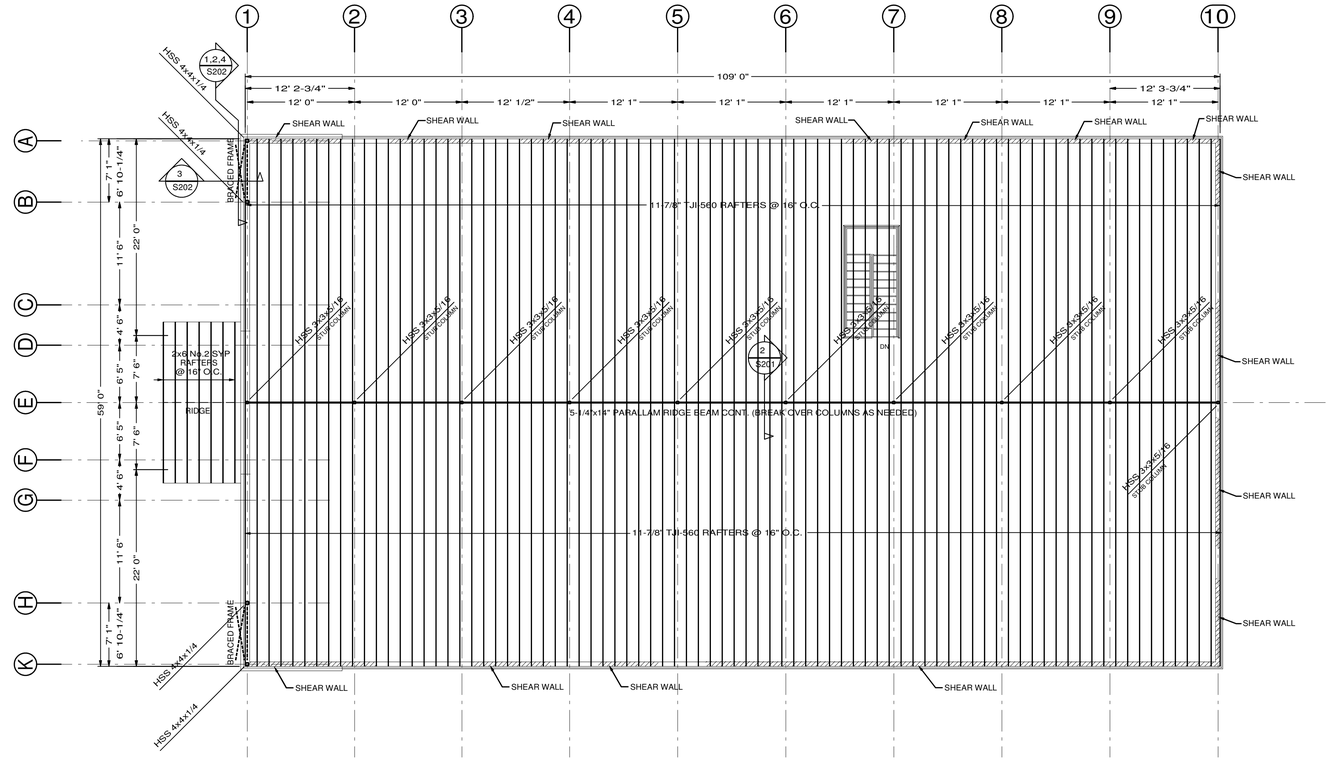


## ROOF FRAMING PLAN

*SCALE 1/8"=1'*

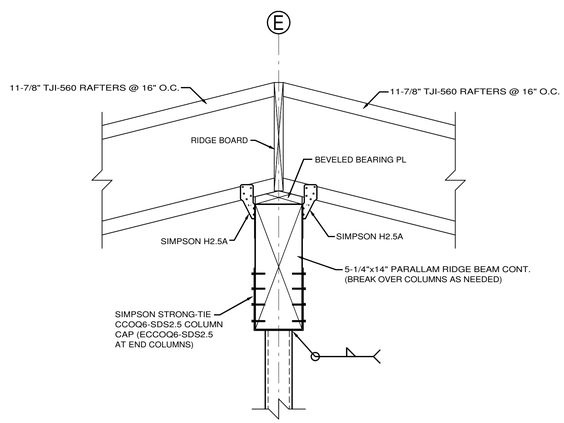


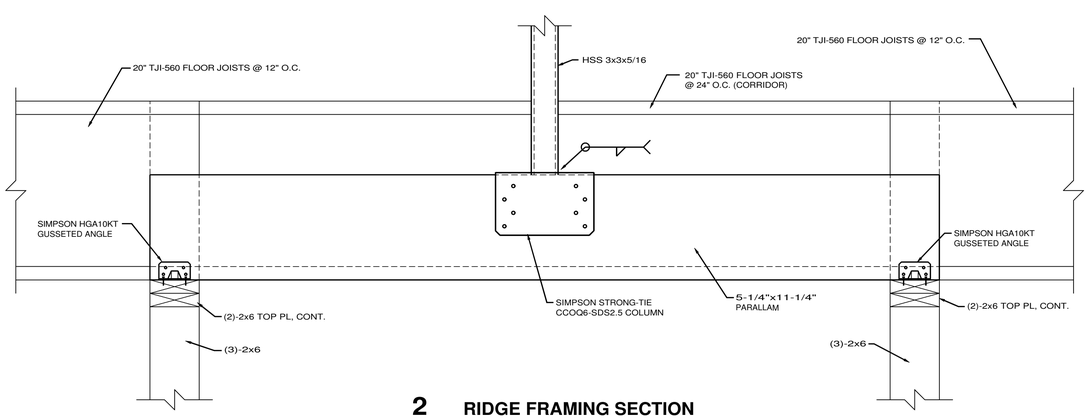


**2 RIDGE FRAMING SECTION**

*SCALE 1-1/2"=1'*

### HOLDOWN SCHEDULE

**SECOND FLOOR**
SIMPSON STRONG-TIE HDU2-SDS2.5
OR USP CONNECTORS PHD2A
HOLDOWNS WITH 5/8" DIAM. ANCHOR BOLTS
@ ENDS OF DESIGNATED SHEAR WALLS;
MUST BE INSTALLED WITH MIN. (2) STUDS.

**FIRST FLOOR**
SIMPSON STRONG-TIE HDU11-SDS2.5
OR USP CONNECTORS UPHD9
HOLDOWNS WITH 1" DIAM. ANCHOR BOLTS
@ ENDS OF DESIGNATED SHEAR WALLS;
MUST BE INSTALLED WITH MIN. (5) STUDS.

### SHEATHING SCHEDULE

**SECOND FLOOR SHEATHING**
7/16" O.S.B. SHEATHING
EDGE NAILS = 8d @ 4" O.C.
FIELD NAILS = 8d @ 6" O.C.
MIN FASTNER PENETRATION = 1-3/8"

**FIRST FLOOR SHEATHING**
7/16" O.S.B. SHEATHING
EDGE NAILS = 8d @ 2" O.C.
FIELD NAILS = 8d @ 6" O.C.
MIN FASTNER PENETRATION = 1-3/8"
MUST UTILIZE DOUBLED STUDS
AT ALL PANEL EDGES

### DECKING SCHEDULE

**FLOOR DECKING**
3/4" RATED DECKING
EDGE NAILS = 10d @ 4" O.C.
FIELD NAILS = 10d @ 12" O.C.
(3" x 0.148")

**ROOF DECKING**
5/8" O.S.B. RATED DECKING
EDGE NAILS = 10d (3"x0.148") @ 4" O.C.
FIELD NAILS = 10d (3"x0.148") @ 12" O.C.
PROVIDE BLOCKING @ ALL PANEL EDGES

### WALL FRAMING SCHEDULE

**EXTERIOR WALL**
2x6 SPF No.2 @ 12" O.C. (MAX.)
FULLY SHEATHED w/ BLOCKING
@ 1/3 POINTS

**INTERIOR LOAD BEARING**
2x6 SPF No.2 @ 12" O.C. (MAX.)
w/ BLOCKING @ 1/3 POINTS

### LATERAL TIES

**RAFTER TIES**
SIMPSON STRONG TIE H2.5A
OR USP CONNECTORS RT7A
@ EACH RAFTER

### MIN. LVL MATERIAL PROPERTIES

Flexural Stress, $f_b$ = 2,900 psi
Tension Parallel to Grain, $f_t$ = 2,400 psi
Compressive Strength, $f_c$ = 2,900 psi
Horizontal Shear, $f_v$ = 210 psi
Modulus of Elasticity, E = 2,000,000 psi

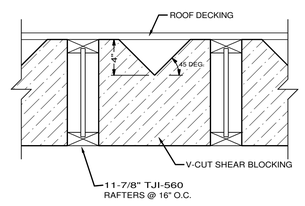


**3 RAFTER SHEAR BLOCKING AT EAVE**

*SCALE 1-1/2"=1'*


SMITH ENGINEERING CO.
CIVIL & STRUCTURAL
P.O.BOX 299 * MARION, AR 72364 * (870) 739-5533


NEW OFFICE BUILDING
**POINSETT COUNTY**
Harrisburg, Arkansas


BRACKETT KRENNERICH architects
100 East Huntington Ave Suite D P.O. Box 1655
870-932-0571 Fax: 870-932-0975
www.bkarchts.com


| Revision Schedule | | | |
|---|---|---|---|
| Tag | Rev. Description | Rev. Date | Issued by |

STATE OF ARKANSAS
REGISTERED PROFESSIONAL ENGINEER
No. 12043
MICHAEL D. SMITH
7/26/24

Commission Number
0000

S201

Date July 26, 2024

FRAMING PLAN & DETAILS

**BUILDING CODE:** **2021 INTERNATIONAL BUILDING CODE**

GRAVITY LOADS:
LIVE LOADS:
FLOOR.....100 psf
ROOF.....20 psf

DEAD LOADS:
MISC.....ACTUAL WEIGHTS OF MATERIALS
ROOF.....15 psf

LATERAL LOADS:
WIND:
BASIC WIND SPEED.....115 mph
EXPOSURE CATEGORY.....C

SEISMIC:
SEISMIC USE GROUP.....Group I
SEISMIC IMPORTANCE FACTOR.....Ie=1.0
SPECTRAL RESPONSE COEFFICIENTS.....$S_{DS}$ = 1.261
.....$S_{D1}$ = 0.834
SITE CLASS.....D (ASSUMED)
SEISMIC DESIGN CATEGORY.....E
BASIC SEISMIC FORCE RESISTING SYSTEM.....PLYWOOD SHEAR WALLS W/ LOAD BEARING WOOD STUDS
DESIGN BASE SHEAR.....0.194 w
ANALYSIS PROCEDURE.....EQUIVALENT LATERAL FORCE (SIMPLIFIED)

STRUCTURAL DESIGN APPROACH
FOUNDATION SYSTEM:
THE FOUNDATION CONSISTS OF REINFORCED CONCRETE CONTINUOUS FOOTINGS WITH REINFORCED CONCRETE SPREAD FOOTINGS AT HEAVY POINT LOADS.

WALLS:
THE STRUCTURE UTILIZES WOOD FRAMING WITH LOAD BEARING STUD WALLS.

LATERAL STABILITY:
LATERAL STABILITY IS PROVIDED BY THE ROOF DECK ACTING AS A DIAPHRAGM SPANNING BETWEEN SHEAR TRANSFER ELEMENTS WITH PLYWOOD SHEAR WALLS.

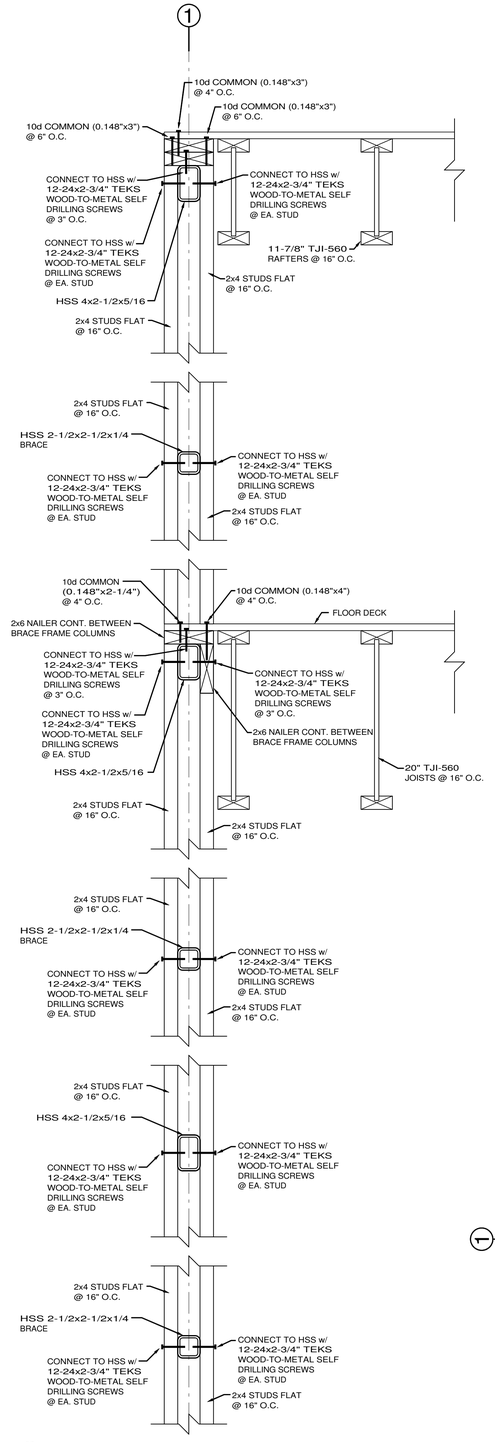


**3 BRACE FRAME SECTION**
*SCALE 1-1/2"=1'*

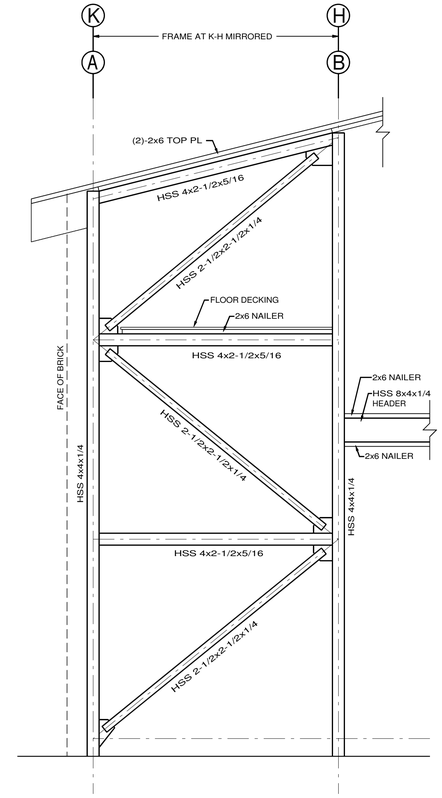


**1 BRACE FRAME ELEVATION**
*NOT TO SCALE*

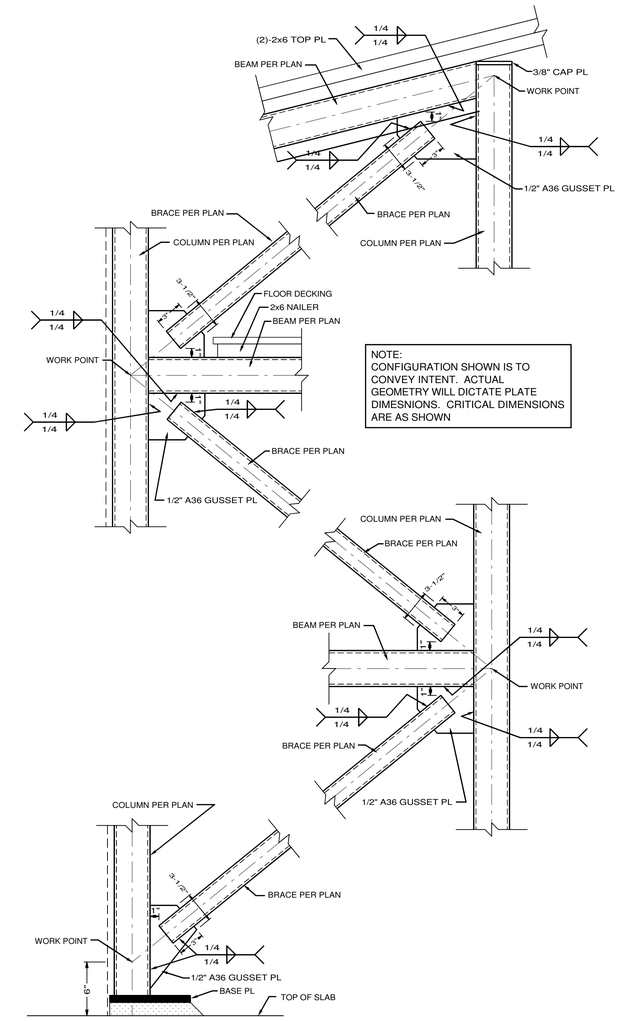


NOTE:
CONFIGURATION SHOWN IS TO CONVEY INTENT. ACTUAL GEOMETRY WILL DICTATE PLATE DIMESNIONS. CRITICAL DIMENSIONS ARE AS SHOWN

**2 BRACE FRAME DETAIL**
*SCALE 1-1/2"=1'*

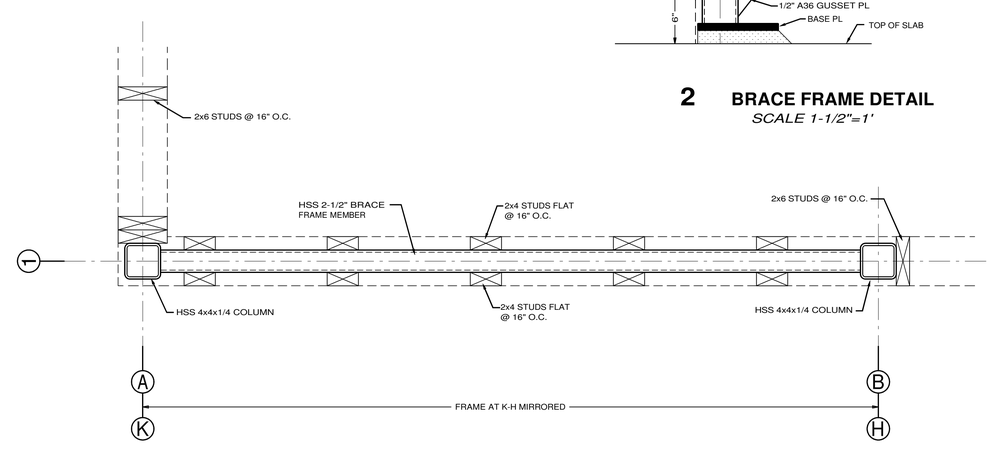


**4 BRACE FRAME PLAN**
*SCALE 1-1/2"=1'*

SMITH ENGINEERING CO.
CIVIL & STRUCTURAL
P.O.BOX 299 * MARION, AR 72364 * (870) 739-5533

NEW OFFICE BUILDING
**POINSETT COUNTY**
Harrisburg, Arkansas

BRACKETT KRENNERICH architects

100 East Huntington Ave Suite D P.O. Box 1655 870-932-0571 Fax: 870-932-0975 www.bkarchts.com

| Revision Schedule | | | |
|---|---|---|---|
| Tag | Rev. Description | Rev. Date | Issued by |

STATE OF ARKANSAS
REGISTERED PROFESSIONAL ENGINEER
No. 12043
MICHAEL D. SMITH
7/26/24

Commission Number
0000

S202

Date July 26, 2024

FRAMING DETAILS

## GENERAL MECHANICAL SYMBOLS

- REVISION NUMBER - SHOWN ON PLANS
- POINT WHERE NEW CONNECTS TO EXISTING
- NUMBER OF DETAIL ON SHEET
- NUMBER OF SHEET WHERE DETAIL APPEARS
- KEYNOTE
- CONTINUATION SYMBOL
- Room 1 — ROOM NAME AND NUMBER
- ITEM TO BE DEMOLISHED
- AREA NOT IN CONTRACT
- 2" — PIPE SIZE TAG (DIAMETER)
- ABOVE GROUND PIPING
- 1/8" / 12" SLOPE — PIPE SLOPE TAG
- BELOW GROUND PIPING
- INVERT: -105' - 1" — PIPE INVERT ELEVATION TAG
- (E) — EXISTING PIPE TAG
- PIPING BEING DEMOLISHED

## PLUMBING AND PIPING SYMBOLS

- CHWR — CHILLED WATER RETURN
- CHWS — CHILLED WATER SUPPLY
- CD — CONDENSATE DRAINAGE
- CWR — CONDENSER WATER RETURN
- CWS — CONDENSER WATER SUPPLY
- GWR — GEOTHERMAL WATER RETURN
- GWS — GEOTHERMAL WATER SUPPLY
- HWR — HEATING WATER RETURN
- HWS — HEATING WATER SUPPLY
- REF-L — REFRIGERANT-LIQUID
- REF-S — REFRIGERANT-SUCTION
- REF-HG — REFRIGERANT-HOT GAS
- STM — STEAM
- CDR — CONDENSATE RETURN

PIPE DROP, PIPE RISE, PIPE TEE, CAP, 4", 2", PLUG, REDUCING 45 DEGREE TEE, 45 DEGREE TEE

### PIPE ACCESSORY TAGS

- 2" DOM. WM — DOMESTIC WATER METER
- 2" M-CNTRL — MOTORIZED CONTROL VALVE
- 2" BALANCING — BALANCING VALVE
- 2" 3-WAY CNTRL — 3 WAY MOTORIZED CONTROL VALVE
- 2" SHUTOFF — 1/4 TURN BALL VALVE
- 2" PRV — PRESSURE REDUCING VALVE
- 2" CHECK — CHECK VALVE
- 3/8" SOLENOID — REFRIGERANT SOLENOID VALVE
- 2" TMV — 3-WAY MIXING VALVE
- 2" BUTTERFLY — BUTTERFLY VALVE

## ABBREVIATIONS

| | | | |
|---|---|---|---|
| Ø | ROUND | LVR | LOUVER |
| ABV | ABOVE | LWT | LEAVING WATER TEMPERATURE |
| AC | AIR CONDITIONING | M/A | MIXED AIR |
| AD | AREA DRAIN | MAX | MAXIMUM |
| ADD | ADDENDUM | MBH | ONE THOUSAND BTU PER HOUR |
| AFF | ABOVE FINISHED FLOOR | MCF | ONE THOUSAND CUBIC FEET |
| AFUE | ANNUAL FUEL UTILIZATION EFFICIENCY | MD | MOTORIZED DAMPER |
| ALT | ALTERNATE | MECH | MECHANICAL |
| AP | ACCESS PANEL | MFR | MANUFACTURER |
| ARCH | ARCHITECT/ARCHITECTURAL | MIN | MINIMUM |
| BFF | BELOW FINISHED FLOOR | MISC | MISCELLANEOUS |
| BLW | BELOW | MTR | MOTOR |
| BTU | BRITISH THERMAL UNITS | MU/A | MAKE-UP/AIR |
| BTUH | BRITISH THERMAL UNITS PER HOUR | NC | NOISE CRITERIA |
| CAP | CAPACITY | NC | NORMALLY CLOSED |
| CB | CATCH BASIN | NIC | NOT IN CONTRACT |
| CFM | CUBIC FEET PER MINUTE | NO | NUMBER |
| CLG | CEILING | NO | NORMALLY OPEN |
| CO | CLEAN OUT | NTS | NOT TO SCALE |
| CW | COLD WATER | O | OXYGEN |
| D | DEGREE | O/A | OUTSIDE AIR |
| DB | DRY BULB | ORD | OVERFLOW ROOF DRAIN |
| DIA | DIAMETER | PD | PRESSURE DROP |
| DN | DOWN | PIV | POST INDICATOR VALVE |
| DW | DISTILLED WATER | PLBG | PLUMBING |
| EA | EACH | PRESS | PRESSURE |
| EAT | ENTERING AIR TEMPERATURE | PRV | PRESSURE REDUCING VALVE |
| ELEC | ELECTRICAL | PSI | POUNDS PER SQUARE INCH |
| EQUIP | EQUIPMENT | PSIG | POUNDS PER SQUARE INCH GAUGE |
| EWC | ELECTRIC WATER COOLER | PWR | POWER |
| EWT | ENTERING WATER TEMPERATURE | R | DUCT RISER |
| E/A | EXHAUST AIR | R/A | RETURN AIR |
| EXIST | EXISTING | RCP | RADIANT CEILING PANEL |
| F | DEGREES FAHRENHEIT | RD | ROOF DRAIN |
| FCO | FLOOR CLEAN OUT | REC | RECESSED |
| FD | FLOOR DRAIN | RED | REDUCER |
| FD | FIRE DAMPER | RH | RELATIVE HUMIDITY |
| FDV | FIRE DEPARTMENT VALVE | RL/A | RELIEF AIR |
| FL | FLOOR | RM | ROOM |
| FO | FUEL OIL | RPM | REVOLUTIONS PER MINUTE |
| FOV | FUEL OIL VENT | RW | RAIN WATER |
| FOR | FUEL OIL RETURN | SF | SQUARE FOOT |
| FOS | FUEL OIL SUPPLY | S/A | SUPPLY AIR |
| FPM | FEET PER MINUTE | SAN | SANITARY |
| FS | FLOOR SINK | SF | SQUARE FOOT |
| FT | FOOT/FEET | SD | SMOKE DAMPER |
| FTR | FIN TUBE RADIATION | SM | SURFACE MOUNT |
| GAL | GALLON | SP | STANDPIPE |
| GC | GENERAL CONTRACTOR | SP | STATIC PRESSURE |
| GPM | GALLONS PER MINUTE | STM | STEAM |
| GW | GREASE WASTE | T | THERMOSTAT |
| HB | HOSE BIB | TD | TEMPERATURE DROP |
| HP | HORSE POWER | TDR | TRENCH DRAIN |
| HTG | HEATING | TEMP | TEMPERATURE |
| HTR | HEATER | TYP | TYPICAL |
| HW | HOT WATER | UG | UNDERGROUND |
| HYD | HYDRANT | VAC | VACUUM |
| ID | INDIRECT | V | VENT |
| IN | INCH | VAV | VARIABLE AIR VOLUME |
| INV | INVERT | VENT | VENTILATION |
| LB | POUND | VTR | VENT THROUGH ROOF |
| LB/HR | POUNDS PER HOUR | W | WASTE |
| LAT | LEAVING AIR TEMPERATURE | WB | WET BULB |
| LP | LOW PRESSURE | WCO | WALL CLEAN OUT |
| LPG | LIQUEFIED PETROLEUM GAS | WH | WALL HYDRANT |

## EQUIPMENT ABBREVIATIONS

| | | | |
|---|---|---|---|
| AC | AIR CONDITIONING UNIT | ET | EXPANSION TANK |
| ACCU | AIR COOLING CONDENSING UNIT | FCU | FAN COIL UNIT |
| AHU | AIR HANDLING UNIT | GRV | GRAVITY ROOF VENTILATOR |
| AS | AIR SEPARATOR | HWP | HEATING WATER PUMP |
| B | BOILER | HRU | HEAT RECOVERY UNIT |
| CH | CHILLER | PRV | POWER ROOF VENTILATOR |
| CT | COOLING TOWER | RE | RETURN/EXHAUST FAN |
| CUH | CABINET UNIT HEATER | RTU | ROOFTOP UNIT |
| CHWP | CHILLED WATER PUMP | SP | SUMP PUMP |
| DC | DUCT MOUNTED COIL | UH | UNIT HEATER |
| EF | EXHAUST FAN | | |
| EDC | ELECTRIC DUCT COIL | | |

## HVAC SYMBOLS

- 16"x8" — SQUARE DUCT SIZE TAG (WIDTH x HEIGHT)
- 16"/8" — OVAL DUCT SIZE TAG (WIDTH / HEIGHT)
- 16"Ø — ROUND DUCT SIZE TAG (DIAMETER)
- (E) — EXISTING DUCT TAG
- DUCT BEING DEMOLISHED
- SUPPLY AIR / OUTSIDE AIR
- RETURN AIR
- TRANSFER AIR
- EXHAUST AIR
- DROP — RECTANGULAR SUPPLY/OUTSIDE AIR DUCT RISE
- DROP — ROUND SUPPLY/OUTSIDE AIR DUCT RISE
- DROP — RECTANGULAR RETURN/TRANSFER AIR DUCT RISE
- DROP — ROUND RETURN/TRANSFER AIR DUCT RISE
- DROP — RECTANGULAR EXHAUST/RELIEF AIR DUCT RISE
- DROP — ROUND EXHAUST/RELIEF AIR DUCT RISE

### GRILLES, REGISTERS & DIFFUSERS TAG

TYPE (SEE SCHEDULE)
3-CONE DIFFUSER — SD1 400 / 10" / 24x24 / 22 H-5/7/14
CFM
NECK SIZE / MODULE SIZE
THROW-150FPM/ 100FPM/ 50FPM
THROW PATTERN
MAX NC RATING

PERFORATED DIFFUSER WITH DEFLECTORS — SD3 300 / 10" / 24x24

RG2 500 / 12"x10" / 24x24 / 18 — EGGCRATE RETURN GRILLE

ROUND DIFFUSER WITH ADJUSTABLE PATTERNS — SD9 400 / 12" / ---

LOUVERED DOUBLE DEFLECTION GRILLE — SG5 500 / 12"x10"

RG11 500 / 12"x10" / 24x12 — LOUVERED GRILLE

LINEAR BAR GRILLE — SLB3 400 / 48"x2 1/2"

### LINEAR DIFFUSER TAG

TYPE (SEE SCHEDULE) — LSD1 200 / 1 / 4' - 0" / 8" / 8' - 0"AFF
CFM
NUMBER OF SLOTS / ACTIVE SLOT LENGTH (PLENUM LENGTH) / DECK SIZE
ELEVATION (CENTER OF FACE)
SECTION TOTAL TRACK LENGTH

LINEAR SLOT DIFFUSER — LSD1 200 / 1 / 4' - 0" / 8" — 6' - 0" — LSD1 200 / 1 / 4' - 0" / 8"

### MECHANICAL EQUIPMENT TAGS

HEATING COIL FLOW — VAV-XX / Htg: 3.7 GPM / VAV BOX
BOTTOM OF EQUIPMENT ELEVATION — VAV-XX / 10' - 0"
EXISTING EQUIPMENT TO REMAIN — (E)VAV-XX
EXISTING RELOCATED EQUIPMENT — (R)VAV-XX
EQUIPMENT BY OTHERS (REFER TO OTHER DISCIPLINE FOR ADDITIONAL INFORMATION) — VAV-XX

RTU-XX — OPERATING WEIGHT NOT INCLUDING CURB — 590 lb
RTU-XX — 4.0 ton — NOMINAL COOLING CAPACITY
ROOFTOP UNIT
RTU-XX — FUEL INPUT GAS PIPE FLOW — 115000 Btu/h / 115 CFH

### DATA DEVICE TAGS

SYMBOL
EQUIPMENT ID

| | | | | |
|---|---|---|---|---|
| CARBON DIOXIDE SENSOR | CO2 | TH | RTU-XX | TEMPERATURE & HUMIDITY SENSOR |
| CARBON MONOXIDE SENSOR | CO | TS | VAV-XX | TEMPERATURE SENSOR |
| NITROGEN DIOXIDE SENSOR | NO2 | T | | THERMOSTAT |
| HUMIDITY SENSOR | HS | MS | | MANUAL SWITCH |
| HUMIDISTAT | H | S | | SENSOR |

### DAMPER TAGS

| | | | |
|---|---|---|---|
| FIRE DAMPER | F | B | MANUAL BALANCING DAMPER |
| SMOKE DAMPER | S | D | BACKDRAFT DAMPER |
| MOTORIZED DAMPER | M | C | COMBINATION FIRE/SMOKE DAMPER |

## PROJECT GENERAL NOTES

1. COORDINATE INSTALLATION OF PIPING, DUCTWORK, CONDUIT, LIGHTS, CABLE TRAY, STRUCTURE, AND EQUIPMENT TO PREVENT CONFLICTS.
2. THE CONTRACTOR SHALL BE FAMILIAR WITH ALL THE CONDITIONS BOTH EXISTING AND THOSE ILLUSTRATED BY THESE DOCUMENTS AS WELL AS THOSE WHICH CAN BE REASONABLY ANTICIPATED INCLUDING, BUT NOT LIMITED TO ARCHITECTURAL, ELECTRICAL, VENTILATION, PLUMBING, AND OTHER SYSTEMS INVOLVED ON THIS PROJECT.
3. PRIOR TO CONSTRUCTING OPENINGS THRU ROOF, WALLS OR FLOORS, COORDINATE WITH GENERAL CONTRACTOR AND ALL OTHER TRADES. COORDINATE WITH GENERAL CONTRACTOR TO PATCH AND/OR REPAIR OPENINGS. DO NOT CUT EXISTING STRUCTURAL ELEMENTS.
4. FINAL PRODUCT SHALL BE A COMPLETE AND FUNCTIONING SYSTEM, AND SHALL CONFORM TO ALL REQUIREMENTS OF APPLICABLE FEDERAL, STATE, AND LOCAL CODES, INCLUDING BUT NOT LIMITED TO THE INTERNATIONAL BUILDING CODE AND INTERNATIONAL MECHANICAL CODE.
5. LOCATE EQUIPMENT REQUIRING ACCESS 2'-0" MAXIMUM ABOVE CEILING.
6. ALL ROOF MOUNTED EQUIPMENT SHALL BE A MINIMUM 10'-0" FROM EDGE OF ROOF.
7. LOCATE DUCTWORK, PIPING AND MECHANICAL EQUIPMENT AWAY FROM THE SPACE ABOVE ELECTRICAL PANELS. TRANSFORMERS AND OTHER ELECTRICAL EQUIPMENT.
8. FIRE SEAL AROUND DUCT AND PIPING PENETRATIONS OF FIRE RATED WALLS. REFER TO SPECIFICATION.
9. PROVIDE SLEEVES AND/OR OPENINGS TO RUN PIPES AND DUCTS THROUGH FOUNDATIONS, FLOORS, WALLS, AND ROOF.
10. ADJUST PIPING AND DUCTWORK SIZES TO PROPERLY CONNECT TO MECHANICAL EQUIPMENT.
11. REFER TO PLUMBING SERIES DRAWINGS FOR GAS PIPING.
12. PIPE SIZES SHOWN SHALL BE CONTINUED IN THE DIRECTION OF FLOW UNTIL ANOTHER SIZE IS SHOWN.
13. FOR DETAILS, EQUIPMENT CONNECTIONS, AND PIPE SIZES NOT SHOWN ON THE SEGMENTS, REFER TO DETAILS, SCHEDULES, AND SPECIFICATIONS.
14. INSTALL ALL EQUIPMENT IN ACCORDANCE WITH THE RESPECTIVE MANUFACTURER'S WRITTEN INSTALLATION INSTRUCTIONS, AT A LEVEL OF QUALITY AND WORKMANSHIP CONSISTENT WITH THE SPECIFICATIONS.
15. LOCATIONS OF PIPING, DUCTWORK AND EQUIPMENT AS INDICATED ON THE DRAWING, ARE APPROXIMATE AND SUBJECT TO MINOR ADJUSTMENTS IN THE FIELD. WORK SHALL BE COORDINATED WITH ALL OTHER TRADES TO AVOID INTERFERENCE IN THE FIELD.
16. INSTALL EXPOSED PIPING AND DUCTWORK AS HIGH AS PRACTICAL IN ROOMS WITHOUT CEILINGS.
17. GENERAL CONTRACTOR IS RESPONSIBLE FOR TEMPORARY HEATING AND AIR CONDITIONING. THE BUILDING HVAC SYSTEMS SHALL NOT BE USED FOR TEMPORARY CONDITIONING AT ANY TIME DURING CONSTRUCTION.

## HVAC GENERAL NOTES

1. ALL MECHANICAL WORK SHALL COMPLY WITH ALL CURRENT REQUIREMENTS OF FEDERAL, STATE, AND LOCAL CODES, INTERNATIONAL BUILDING CODES, AND 2021 ARKANSAS MECHANICAL CODE. REFER TO ARCHITECTURAL CODE ANALYSIS.
2. ALL EXPOSED DUCTWORK IN FINISHED SPACES SHALL HAVE A PRIMED AND PAINTED SHEET METAL EXTERIOR FINISH. IF THE DUCT IS SCHEDULED TO HAVE EXTERIOR INSULATION THE CONTRACTOR SHALL INSTALL A CONTINUOUS SHEET METAL WRAP AROUND THE INSULATION OR PROVIDE DOUBLE-WALL INSULATED SPIRAL DUCT.
3. HVAC SUPPLY AIR, RETURN AIR, OUTSIDE AIR AND EXHAUST AIR DUCTWORK SHALL BE FABRICATED FROM GALVANIZED SHEET STEEL COMPLYING WITH ASTM A527, LOCKFORMING QUALITY, WITH G90 ZINC COATING IN ACCORDANCE WITH ASTM A525, AND MILL PHOSPHATIZED FOR EXPOSED LOCATIONS. SHEET METAL GAUGES SHALL COMPLY WITH SMACNA SPECIFICATIONS. ALL DUCTING SHALL BE SEALED AIRTIGHT W/ POLYKEN NO. 337 ALUMINUM DUCT TAPE.
4. INSTALL TURNING VANES AND DUCT EXTRACTORS IN DUCTWORK AS SHOWN AND/OR AS REQUIRED FOR AIR FLOW.
5. SUPPLY AND RETURN AIR DUCTWORK IN UNCONDITIONED INTERIOR SPACES (I.E. VENTED ATTIC SPACE) SHALL BE INSULATED TO A MINIMUM R-VALUE OF R-8 .
6. INSTALL ALL WORK AS INDICATED IN THE DRAWINGS AND SPECIFICATIONS. COORDINATE WITH OTHER TRADES, AND DETERMINE PROPER ELEVATIONS FOR ALL COMPONENTS. VERIFY EXACT LOCATIONS AND ELEVATION OF ALL WORK. ALL WORK SHALL BE INSTALLED IN A NEAT MANNER USING GOOD WORKMANSHIP AND SHALL BE RIGIDLY SECURED IN PLACE TO PROVIDE THE INTENDED SERVICE.
7. ALL DUCTWORK SHALL BE SUPPORTED BY HANGERS OF TYPES AND AT THE SPACINGS AS RECOMMENDED BY SMACNA, UNLESS OTHERWISE SHOWN AND/OR NOTED ON THE DRAWINGS. THE CONTRACTOR SHALL PROVIDE ADDITIONAL STEEL ANGLES, CHANNELS, UNISTRUT, ETC., AS REQUIRED TO SPAN BETWEEN STRUCTURAL MEMBERS IN ORDER TO HANG DUCTING AT PROPER INTERVALS AND AT NECESSARY POINTS.
8. PRIOR TO START OF WORK, COORDINATE WITH GENERAL, PLUMBING, ELECTRICAL AND FIRE PROTECTION CONTRACTORS AND DRAWINGS FOR LOCATION OF ALL DUCTWORK AND GRILLES. COORDINATE WITH REFLECTED CEILING PLANS AND LIGHTING PLANS FOR LOCATION OF CEILING GRILLES. INSURE THAT THERE IS ADEQUATE CLEARANCE FOR DUCTWORK IN THE CEILING SPACE.
9. FURNISH AND INSTALL FIRE, FIRE/SMOKE, CEILING RADIATION DAMPERS WITH SLEEVES AND DUCT ACCESS DOORS IN ALL DUCT PENETRATIONS THROUGH RATED ASSEMBLIES. CONTRACTOR IS RESPONSIBLE FOR PROVIDING AND INSTALLING LIFE SAFETY DAMPERS IN ALL RATED ASSEMBLY PENETRATIONS REGARDLESS OF THE PRESENCE OF A DAMPER SYMBOL ON THE PLAN.
10. ALL LOW VOLTAGE CONTROL WIRING SHALL BE FURNISHED AND INSTALLED BY MECHANICAL CONTRACTOR. LOW VOLTAGE WIRING SHALL BE INSTALLED CONCEALED WITHIN WALLS AND CEILING SPACES. WHERE WIRING WILL BE INACCESSIBLE AFTER FINISH WORK IS COMPLETED, THE WIRING SHALL BE INSTALLED IN EMT CONDUIT.
11. CONTRACTOR SHALL LOCATE THERMOSTATS AND TEMPERATURE SENSORS AT 5'-0" AFF, A MINIMUM OF 8" FROM LIGHT SWITCH.
12. CONDENSATE DRAINS SHALL BE SUPPLIED FOR ALL COOLING EQUIPMENT. CONTRACTOR SHALL ENSURE PROPER INSTALLATION AND DRAINAGE AS REQUIRED BY FEDERAL, STATE, AND LOCAL CODES. CONDENSATE PIPING SHALL BE TYPE "L" COPPER OR SCH 40 PVC.
13. PROVIDE A 4" HOUSEKEEPING PAD FOR EACH PIECE OF MECHANICAL EQUIPMENT. COORDINATE SIZES WITH MECHANICAL EQUIPMENT SELECTED.
14. ALL SUPPLY, RETURN, AND EXHAUST DUCTWORK SHALL BE RATED FOR PRESSURE CLASS OF 2" W.G. UNLESS NOTED OTHERWISE.
15. THIS CONTRACTOR SHALL BE REQUIRED TO REPLACE FILTERS ON HVAC EQUIPMENT AFTER ALL DUST PRODUCING CONSTRUCTION HAS BEEN COMPLETED AND PRIOR TO THE FINAL PUNCH.

* NOTE *
ALL OF GENERAL NOTES ON THIS SHEET ARE TO BE APPLIED TO ALL OTHER DRAWINGS IN THIS SET.THE SYMBOLS AND ABBREVIATIONS SHOWN ON THIS SHEET MAY OR MAY NOT BE USED IN THIS SET OF DRAWINGS.


STRICKLAND ENGINEERING
CIVIL MECHANICAL ELECTRICAL ENGINEERING
113 WEST MAIN STREET JACKSON, MISSOURI 63755
TEL: 573-243-4080 FAX: 573-243-2191



POINSETT COUNTY COURT ANNEX
# POINSETT COUNTY
Harrisburg, Arkansas


BRACKETT KRENNERICH architects
100 East Huntington Ave. Suite D P.O. Box 1655 870-932-0571 Fax 870-932-0975 www.bkarchts.com


| Revision Schedule | | | |
|---|---|---|---|
| Tag | Rev. Description | Rev. Date | Issued by |

STATE OF ARKANSAS
REGISTERED PROFESSIONAL ENGINEER
MARK DAVID STRICKLAND
No. 11187
07/26/2024
MARK D. STRICKLAND, P.E.
ENGINEER LICENSE NO. 11187

Commission Number 2237 (SE 23-232)

M100

July 26, 2024

MECHANICAL TITLE SHEET

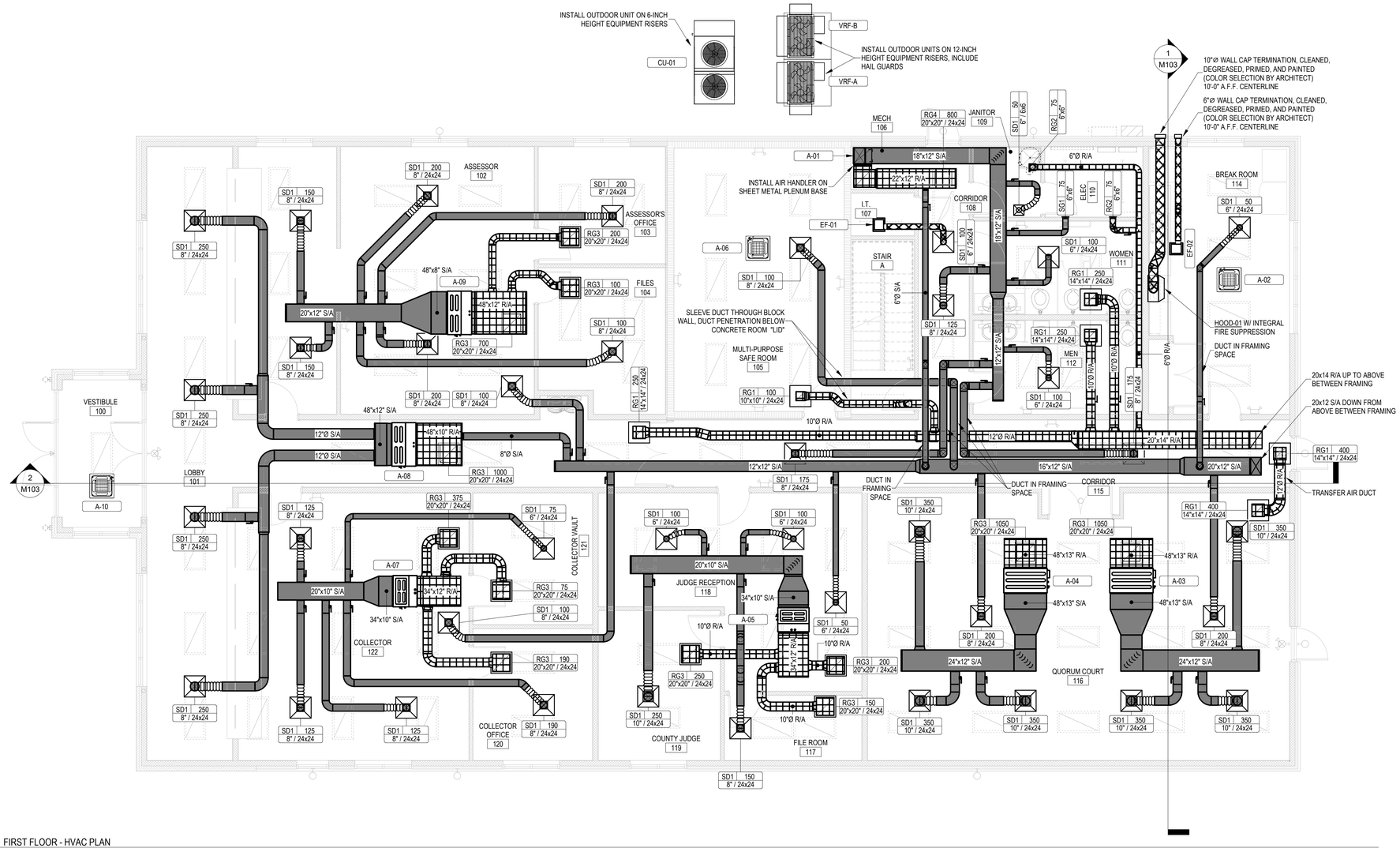


1 M101 FIRST FLOOR - HVAC PLAN
3/16" = 1'-0"

# POINSETT COUNTY COURT ANNEX
# POINSETT COUNTY
## Harrisburg, Arkansas

BRACKETT KRENNERICH architects

100 East Huntington Ave. Suite D P.O. Box 1655 | 870-932-0571 | Fax 870-932-0975 | www.bkarchts.com

| Revision Schedule | | | |
|---|---|---|---|
| Tag | Rev. Description | Rev. Date | Issued by |

STATE OF ARKANSAS
REGISTERED PROFESSIONAL ENGINEER
MARK D. STRICKLAND
07/26/2024
MARK D. STRICKLAND, P.E.
ENGINEER LICENSE NO. 11187

Commission Number 2237 (SE 23-232)

M101

July 26, 2024

FIRST FLOOR HVAC PLAN

STRICKLAND ENGINEERING
CIVIL MECHANICAL ELECTRICAL ENGINEERING
113 WEST MAIN STREET JACKSON, MISSOURI 63755
TEL: 573-243-4080 FAX: 573-243-2191



C:\Users\jwright\Documents\MPE24_Poinsett
Central_wjwright@strickandengineering.com.rvt
8/2/2024 10:26:17 AM

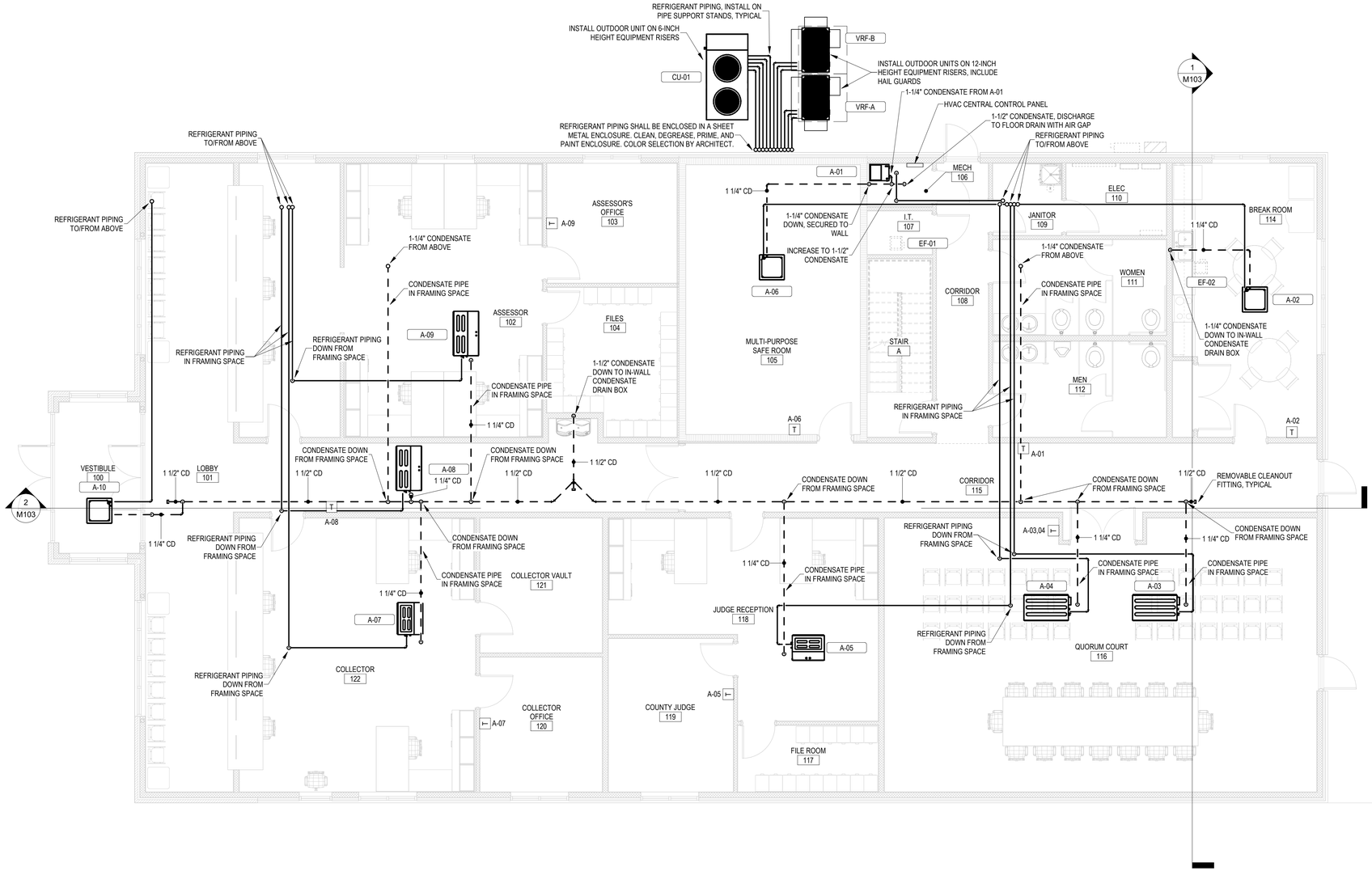


1 M101a FIRST FLOOR - MECHANICAL PIPING PLAN
3/16" = 1'-0"

C:\Users\owright\Documents\MPE24_Poinsett
Access 2024 - 2024 - mark@strickandengineering.com.rvt
8/2/2024 10:26:21 AM

STRICKLAND ENGINEERING
CIVIL MECHANICAL ELECTRICAL ENGINEERING
113 West Main Street Jackson, Missouri 63755
Tel: 573-243-4080 Fax: 573-243-2191



POINSETT COUNTY COURT ANNEX
**POINSETT COUNTY**
Harrisburg, Arkansas

BRACKETT KRENNERICH architects

100 East Huntington Ave. Suite D P.O. Box 1655 870-932-0571 Fax 870-932-0975 www.bkarchts.com

| Revision Schedule | | | |
|---|---|---|---|
| Tag | Rev. Description | Rev. Date | Issued by |

STATE OF ARKANSAS
REGISTERED PROFESSIONAL ENGINEER
MARK D. STRICKLAND
07/26/2024
MARK D. STRICKLAND, P.E.
ENGINEER LICENSE NO. 11187

Commission Number
2237 (SE 23-232)

*M101a*

July 26, 2024

FIRST FLOOR MECHANICAL PIPING PLAN

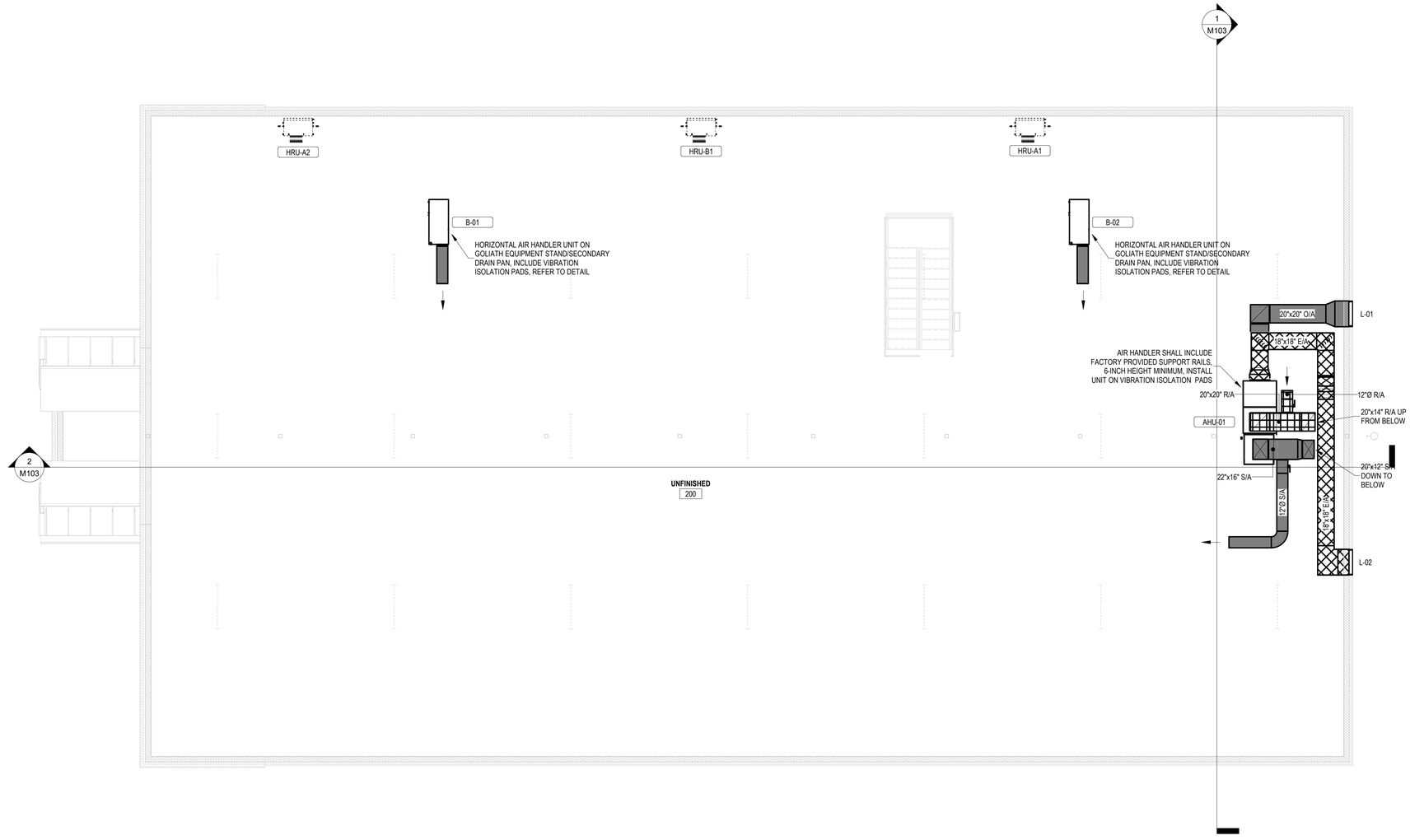


1 M102 FIRST FLOOR - HVAC PLAN
3/16" = 1'-0"

POINSETT COUNTY COURT ANNEX

# POINSETT COUNTY

Harrisburg, Arkansas

BRACKETT KRENNERICH architects

100 East Huntington Ave. Suite D P.O. Box 1655 870-932-0571 Fax 870-932-0975 www.bkarchts.com

| Revision Schedule | | | |
|---|---|---|---|
| Tag | Rev. Description | Rev. Date | Issued by |

STATE OF ARKANSAS
REGISTERED PROFESSIONAL ENGINEER
MARK D. STRICKLAND
11187

07/26/2024
MARK D. STRICKLAND, P.E.
ENGINEER LICENSE NO. 11187

Commission Number
2237 (SE 23-232)

M102

July 26, 2024

SECOND FLOOR HVAC PLAN

STRICKLAND ENGINEERING
CIVIL MECHANICAL ELECTRICAL ENGINEERING
113 West Main Street Jackson, Missouri 63755
Tel: 573-243-4080 Fax: 573-243-2191



C:\Users\jowright\Documents\MPE24_Poinsett
Autodesk Docs\://strickland-engineering.com/M1
8/2/2024 10:26:23 AM

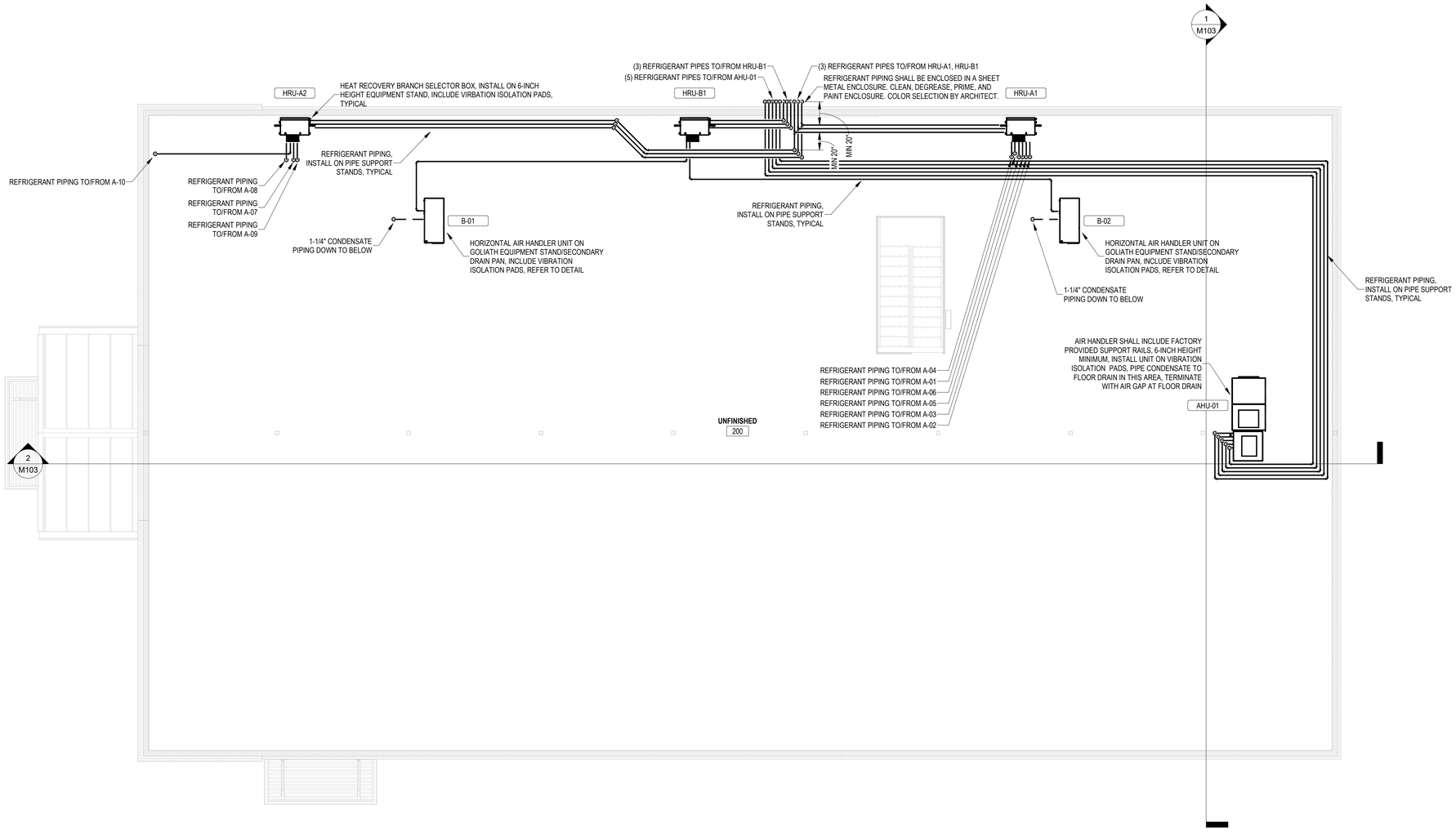


1 M102a FIRST FLOOR - MECHANICAL PIPING PIPING PLAN
3/16" = 1'-0"

# POINSETT COUNTY COURT ANNEX
# POINSETT COUNTY
## Harrisburg, Arkansas

BRACKETT KRENNERICH architects

100 East Huntington Ave. Suite D P.O. Box 1655 870-932-0571 Fax 870-932-0975 www.bkarchts.com

| Revision Schedule | | | |
|---|---|---|---|
| Tag | Rev. Description | Rev. Date | Issued by |

STATE OF ARKANSAS REGISTERED PROFESSIONAL ENGINEER MARK D. STRICKLAND

07/26/2024
MARK D. STRICKLAND, P.E.
ENGINEER LICENSE NO. 11187

Commission Number 2237 (SE 23-232)

M102a

July 26, 2024

SECOND FLOOR MECHANICAL PIPING PLAN

STRICKLAND ENGINEERING
CIVIL MECHANICAL ELECTRICAL ENGINEERING
113 West Main Street Jackson, Missouri 63755
Tel: 573-243-4080 Fax: 573-243-2191



C:\Users\owright\Documents\MPE24_Poinsett
Central_owright@stricklandengineering.com.rvt
8/2/2024 10:26:26 AM

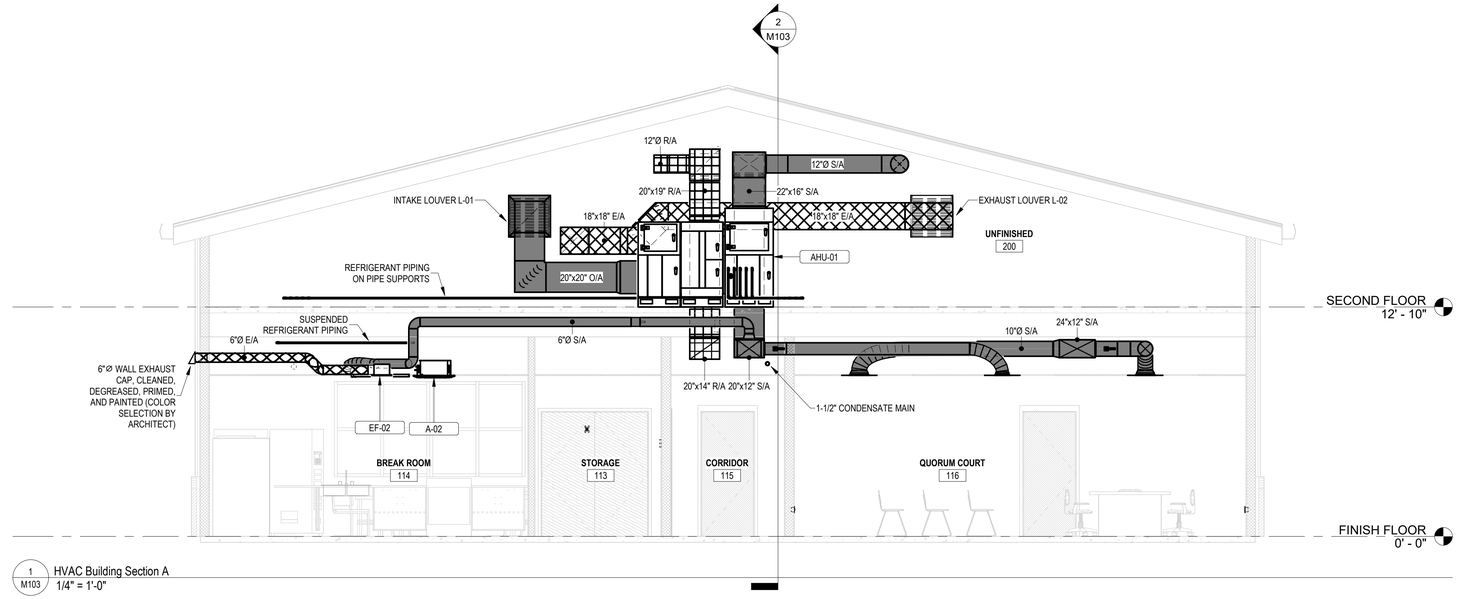


1 M103 HVAC Building Section A
1/4" = 1'-0"

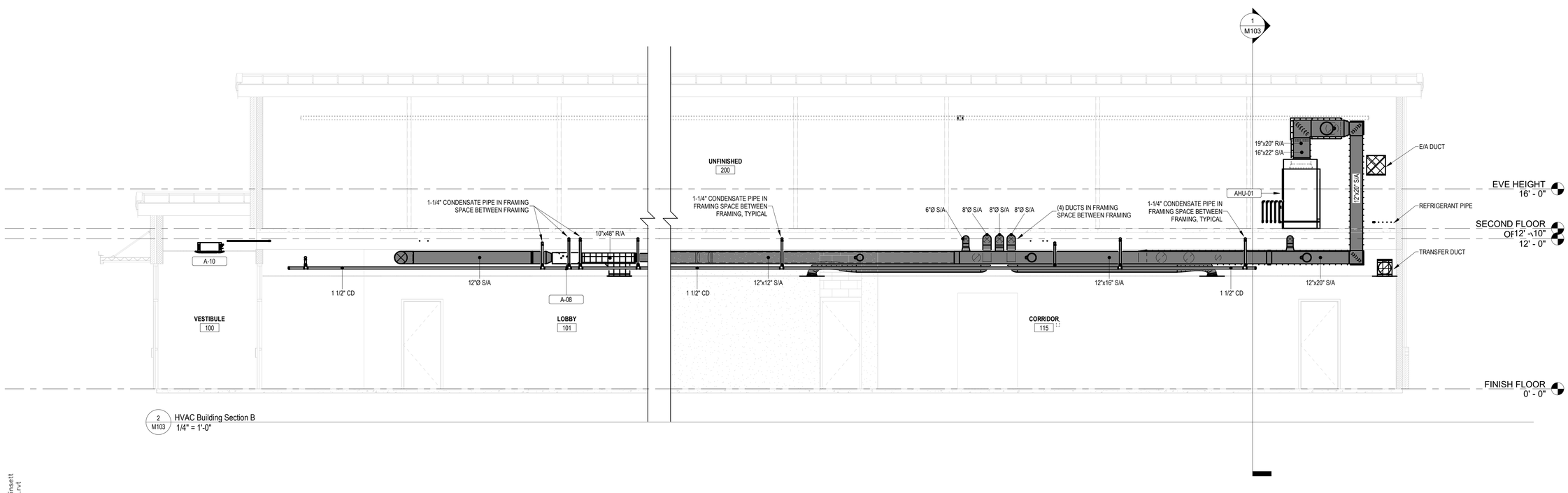


2 M103 HVAC Building Section B
1/4" = 1'-0"

C:\Users\cwright\Documents\MPE24_Poinsett
Central_cwright@strickandengineering.com.rvt
**8/2/2024 10:26:30 AM**

STRICKLAND ENGINEERING
CIVIL MECHANICAL ELECTRICAL ENGINEERING
113 WEST MAIN STREET JACKSON, MISSOURI 63755
TEL: 573-243-4080 FAX: 573-243-2191

STRICKLAND ENGINEERING, LC AR LICENSE #1005

**POINSETT COUNTY COURT ANNEX**
# POINSETT COUNTY
**Harrisburg, Arkansas**

BRACKETT KRENNERICH architects
100 East Huntington Ave. Suite D P.O. Box 1655 870-932-0571 Fax 870-932-0975 www.bkarchts.com

| Revision Schedule | | | |
|---|---|---|---|
| Tag | Rev. Description | Rev. Date | Issued by |

STATE OF ARKANSAS
REGISTERED PROFESSIONAL ENGINEER
MARK D. STRICKLAND
07/26/2024
MARK D. STRICKLAND, P.E.
ENGINEER LICENSE NO. 11187

Commission Number
2237 (SE 23-232)

*M103*

July 26, 2024

**HVAC BUILDING SECTIONS**

| MULTI V INDOOR UNIT EQUIPMENT SCHEDULE | | | | | | | | | | | | | | | |
|---|---|---|---|---|---|---|---|---|---|---|---|---|---|---|---|
| LOCATION | MARK | ROOM NAME | MODEL NUMBER | TYPE | NOMINAL CAPACITY (BTU/H) | | | AIR FLOW RATE (CFM) | PIPING (INCH) | | POWER | | | |
| | | | | | TOTAL COOL | SENSIBLE COOL | HEATING | | LIQUID | GAS | VOLTS | PHASE | HZ | RLA |
| VRF-B | B-01 | Floor002/200 UNFINISHED | ARNU303NJA4 | VERTICAL AHU | 30000 | 21600 | 34000 | 879/802/629 | 3/8 | 5/8 | 208~230V | 1Ph | 60Hz | 1.12 |
| VRF-B | B-02 | Floor002/200 UNFINISHED | ARNU303NJA4 | VERTICAL AHU | 30000 | 21600 | 34000 | 879/802/629 | 3/8 | 5/8 | 208~230V | 1Ph | 60Hz | 1.12 |
| VRF-B | B-03(FUTURE) | Floor002/200 UNFINISHED | ARNU303NJA4 | VERTICAL AHU | 30000 | 21600 | 34000 | 879/802/629 | 3/8 | 5/8 | 208~230V | 1Ph | 60Hz | 1.12 |
| VRF-B | B-04(FUTURE) | Floor002/200 UNFINISHED | ARNU303NJA4 | VERTICAL AHU | 30000 | 21600 | 34000 | 879/802/629 | 3/8 | 5/8 | 208~230V | 1Ph | 60Hz | 1.12 |
| | | | | | | | | 879/802/629 | 3/8 | 5/8 | | | | |
| VRF-A | A-04 | Floor001/116 COURT | ARNU283M3A4 | DUCT HIGH STATIC | 28000 | 22400 | 31500 | 1250/1017/837 | 3/8 | 5/8 | 208~230V | 1Ph | 60Hz | 2.5 |
| VRF-A | A-01 | Floor001/106 ELEC | ARNU243NJA4 | VERTICAL AHU | 24000 | 17800 | 27000 | 710/639/480 | 3/8 | 5/8 | 208~230V | 1Ph | 60Hz | 1.12 |
| VRF-A | A-06 | Floor001/105 SAFE ROOM | ARNU123TRD4 | CASSETTE 4WAY | 12300 | 8900 | 13600 | 307/283/247 | 1/4 | 1/2 | 208~230V | 1Ph | 60Hz | 0.2 |
| VRF-A | A-05 | Floor001/118 JUDGE | ARNU183MAA4 | DUCT MIDDLE STATIC | 19100 | 13900 | 21500 | 635/530/424 | 1/4 | 1/2 | 208~230V | 1Ph | 60Hz | 1.9 |
| VRF-A | A-03 | Floor001/116 COURT | ARNU283M3A4 | DUCT HIGH STATIC | 28000 | 22400 | 31500 | 1250/1017/837 | 3/8 | 5/8 | 208~230V | 1Ph | 60Hz | 2.5 |
| VRF-A | A-02 | Floor001/114 BREAK ROOM | ARNU183TQD4 | CASSETTE 4WAY | 19100 | 13800 | 21500 | 396/388/353 | 1/4 | 1/2 | 208~230V | 1Ph | 60Hz | 0.2 |
| VRF-A | A-08 | Floor001/101 LOBBY | ARNU363M2A4 | DUCT MIDDLE STATIC | 36200 | 26800 | 40600 | 1031/845/676 | 3/8 | 5/8 | 208~230V | 1Ph | 60Hz | 2.3 |
| VRF-A | A-10 | Floor001/100 VESTIBULE | ARNU073TRD4 | CASSETTE 4WAY | 7500 | 5400 | 8500 | 265/247/212 | 1/4 | 1/2 | 208~230V | 1Ph | 60Hz | 0.2 |
| VRF-A | A-07 | Floor001/122 COLLECTOR | ARNU243MAA4 | DUCT MIDDLE STATIC | 24200 | 17700 | 27300 | 706/547/459 | 3/8 | 5/8 | 208~230V | 1Ph | 60Hz | 1.9 |
| VRF-A | A-09 | Floor001/102 ASSESSOR | ARNU363M2A4 | DUCT MIDDLE STATIC | 36200 | 26800 | 40600 | 1031/845/676 | 3/8 | 5/8 | 208~230V | 1Ph | 60Hz | 2.3 |

| MULTI V OUTDOOR UNIT EQUIPMENT SCHEDULE - AIR | | | | | | | | | | | | | | | | | | |
|---|---|---|---|---|---|---|---|---|---|---|---|---|---|---|---|---|---|---|
| MARK | MODEL NUMBER | TYPE | TOTAL CAPACITY (BTU/H) | | OUTDOOR TEMPERATURE (°F) | | EFFICIENCY | | REFRIGERANT | PIPING CONNECTIONS (INCH) | | | POWER | | | | | SOUND POWER |
| | | | TOTAL COOL | TOTAL HEAT | COOL DB | COOL WB | HEAT DB | COOL IEER (SEER) | HEAT COP (HSPF) | | LIQUID | LP GAS | HP GAS | VOLTS | PHASE | HZ | MCA | MOP | |
| VRF-B | ARUM121BTE5 | HR_MULTI V 5 | 119700 | 135000 | 98.1 | 77.0 | 12.9 | 25.6 | 3.97 | R410A | 1/2 | 1-1/8 | 3/4 | 208~230V | 3Ph | 60Hz | 30.9 | 40 | 79 |
| VRF-A | ARUM216BTE5 | HR_MULTI V 5 | 216000 | 243000 | 98.1 | 77.0 | 12.9 | 20.8 | 3.53 | R410A | 5/8 | 1-1/8 | 1-1/8 | 208~230V | 3Ph | 60Hz | 60.3 | 80 | 88 |

| MULTI V HR BOXES | | | | | | | |
|---|---|---|---|---|---|---|---|
| LOCATION | MARK | MODEL NUMBER | QUANTITY | POWER | | | |
| | | | | VOLTS | PHASE | HZ | RLA |
| VRF-B | HRU-B1 | PRHR043A | 1 | 208 / 230V | 1Ph | 60Hz | 0.2 |
| VRF-A | HRU-A1 | PRHR063A | 1 | 208 / 230V | 1Ph | 60Hz | 0.2 |
| VRF-A | HRU-A2 | PRHR063A | 1 | 208 / 230V | 1Ph | 60Hz | 0.2 |

VRF EQUIPMENT NOTES: BASIS OF DESIGN EQUIPMENT IS LG ELECTRONICS U.S.A
(ELECTRONIC SUBMITTALS WILL ONLY BE ACCEPTED AT SUBMITTALS@STRICKLANDENGINEERING.COM)

1. EACH INDOOR UNIT SHALL INCLUDE WIRED THERMOSTAT EQUAL TO LG MULTI-SITE MODEL PREMTVBC2
2. ALL INDOOR UNITS WITH WASHABLE, RE-USABLE FILTERS SHALL INCLUDE TWO SETS OF FILTERS PER INDOOR UNIT
3. VRF SYSTEM SHALL INCLUDE CENTRAL CONTROLLER EQUAL TO LG AC SMART 5 CONTROLLER INTEGRATED WITH HVAC CENTRAL CONTROL PANEL
4. OUTDOOR UNITS SHALL BE EQUIPPED WITH HAIL GUARDS.
5. OUTDOOR UNITS SHALL BE INSTALLED WITH A MINIMUM CLEARANCE OF 12-INCHES FROM THE BOTTOM OF THE EQUIPMENT TO THE TOP OF THE SUPPORTING SURFACE BELOW.
6. EACH HEAT RECOVERY BOX BRANCH OUTLET CONNECTION SHALL HAVE A BALL SHUT-OFF VALVE APPROVED FOR REFRIGERATION SYSTEM USE.

| REFRIGERANT PIPE INSULATION SCHEDULE | | |
|---|---|---|
| PIPE TYPE | PIPE DIAMETER | INSULATION THICKNESS |
| HIGH PRESSURE GAS | < 1" | 1-1/2" |
| | 1" TO < 1-1/2" | 1-1/2" |
| | 1-1/2" TO < 4" | 2" |
| HIGH PRESSURE LIQUID | < 1" | 1" |
| | 1" TO < 1-1/2" | 1-1/2" |
| | 1-1/2" TO < 4" | 1-1/2" |
| LOW PRESSURE GAS | < 1" | 1" |
| | 1" TO < 1-1/2" | 1" |
| | 1-1/2" TO < 4" | 1-1/2" |

NOTES:
1. MECHANICAL SYSTEMS PIPING INSULATION MATERIAL TYPE SHALL BE EPDM CLOSED CELL FLEXIBLE ELASTOMERIC INSULATION
2. CONDENSATE PIPING SHALL BE SCH 40 PVC PIPE INSULATED WITH 1/2" THICKNESS EPDM CLOSED CELL FLEXIBLE ELASTOMERIC INSULATION

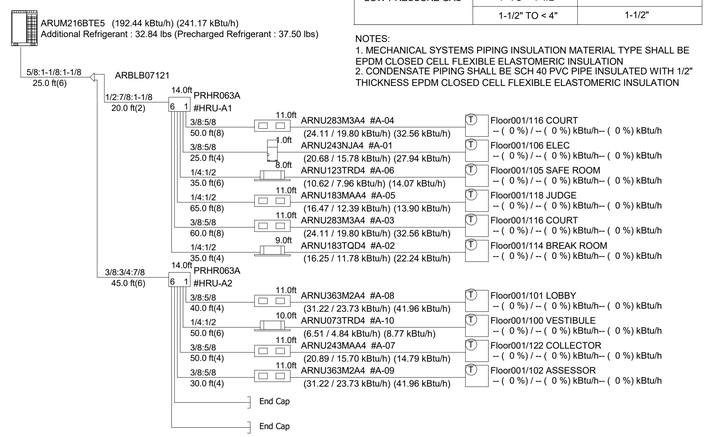


## VRF-A SCHEMATIC PIPING DIAGRAM

NOT TO SCALE

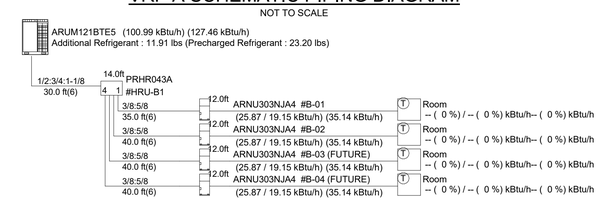


## VRF-B SCHEMATIC PIPING DIAGRAM

NOT TO SCALE

NOTE:
SEE LAYOUT DRAWINGS FOR SPECIFIC SIZES AND ADAPT DUCT LAYOUT FOR EACH AIR HANDLING UNIT AS REQUIRED

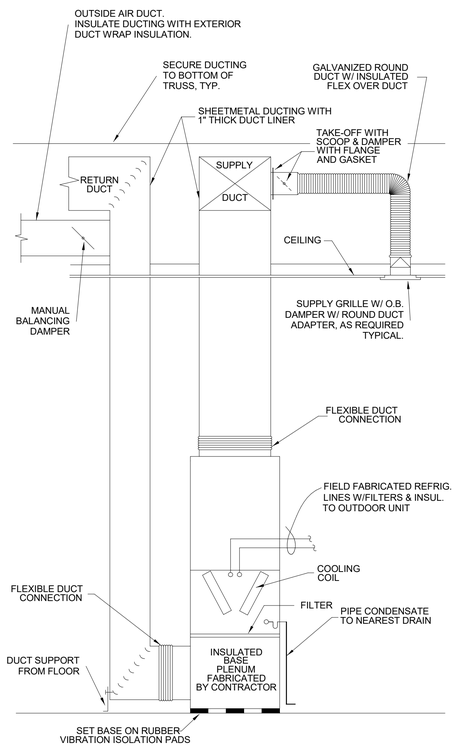


## VERTICAL AIR HANDLING UNIT

NOT TO SCALE

NOTES:
1. PROVIDE SAFETY DRAIN PAN EQUAL TO GOLIATH BASE PAN BY RECTORSEAL, MINIMUM 2" LARGER THAN UNIT ALL AROUND. INCLUDE FLOAT SWITCH TO SHUT UNIT DOWN IN THE EVENT OF CONDENSATE OVERFLOW. FLOAT CONTROL SAFETY SWITCH SHALL BE WIRED TO SHUT-OFF BLOWER IN RESPONSE TO RISING WATER IN PAN. SWITCH SHALL BE EQUAL TO BECKETT FLOAT SAFETY SWITCH. MOUNT PAN ON FLOOR.

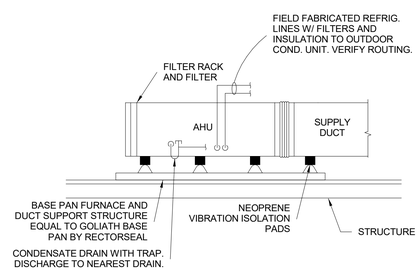


## TYPICAL HORIZONTAL AIR HANDLING UNIT

NOT TO SCALE

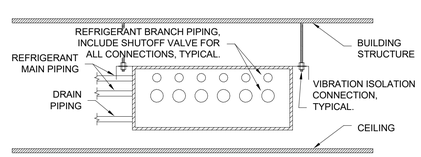


## VRF BRANCH CONTROL BOX

NOT TO SCALE

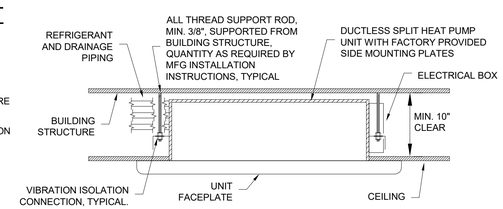


## VRF CEILING CASSETTE AHU

NOT TO SCALE

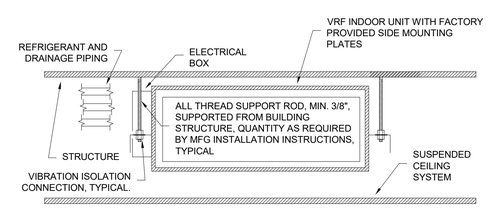


## VRF CEILING CONCEALED DUCTED AHU

NOT TO SCALE


STRICKLAND ENGINEERING
CIVIL MECHANICAL ELECTRICAL ENGINEERING
113 WEST MAIN STREET JACKSON, MISSOURI 63755
TEL: 573-243-4080 FAX: 573-243-2191


STRICKLAND ENGINEERING, LC AR LICENSE #1005

POINSETT COUNTY COURT ANNEX
# POINSETT COUNTY
Harrisburg, Arkansas


BRACKETT KRENNERICH architects
100 East Huntington Ave. Suite D P.O. Box 1655
870-932-0571 Fax 870-932-0975
www.bkarchts.com


| Revision Schedule | | | | |
|---|---|---|---|---|
| Tag | Rev. Description | Rev. Date | Issued by | |

STATE OF ARKANSAS
REGISTERED PROFESSIONAL ENGINEER
MARK D. STRICKLAND
07/26/2024
MARK D. STRICKLAND, P.E.
ENGINEER LICENSE NO. 11187

Commission Number 2237 (SE 23-232)

M104

July 26, 2024

VRF SCHEDULES AND DETAILS

C:\Users\jwright\Documents\MPE24_Poinsett
Central_wjwright@stricklandengineering.com.rvt
8/2/2024 10:26:32 AM

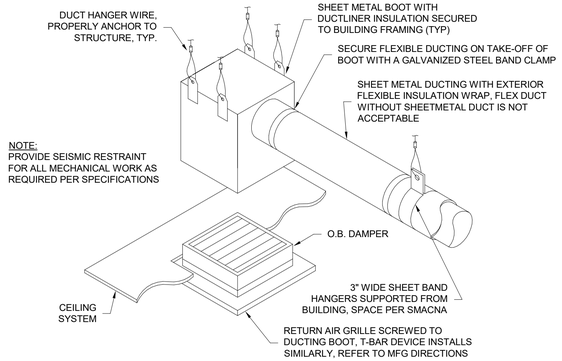


NOTE:
INSTALLATION OF CEILING GRILLE IN A RATED CEILING REQUIRES THE USE OF A CEILING RADIATION DAMPER. DAMPER SHALL BE INSTALLED IN THE SAME PLANE AS THE RATED ASSEMBLY PENETRATED AND FIRESTOPPED AS REQUIRED.

## TYPICAL RETURN AND EXHUAST AIR GRILLE (ROUND DUCT)

NOT TO SCALE

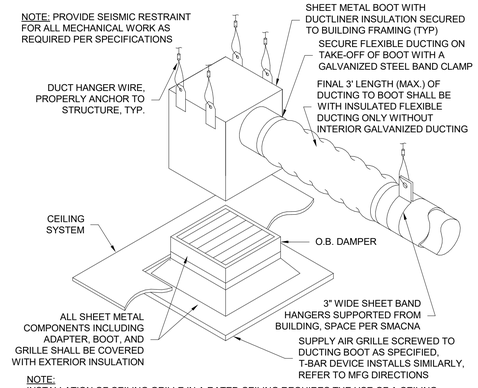


NOTE:
INSTALLATION OF CEILING GRILLE IN A RATED CEILING REQUIRES THE USE OF A CEILING RADIATION DAMPER. DAMPER SHALL BE INSTALLED IN THE SAME PLANE AS THE RATED ASSEMBLY PENETRATED AND FIRESTOPPED AS REQUIRED.

## TYPICAL LIMITED CLEARANCE SUPPLY DEVICE

NOT TO SCALE

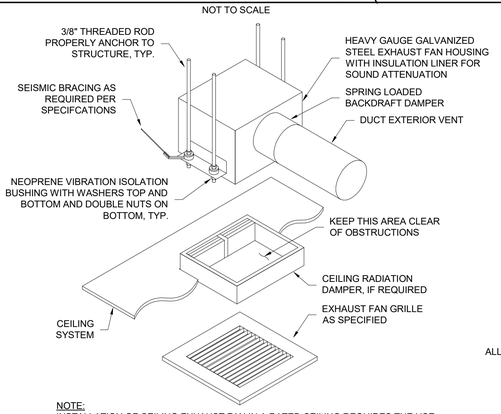


NOTE:
INSTALLATION OF CEILING EXHAUST FAN IN A RATED CEILING REQUIRES THE USE OF A CEILING RADIATION DAMPER. DAMPER SHALL BE INSTALLED IN THE SAME PLANE AS THE RATED ASSEMBLY PENETRATED AND FIRESTOPPED AS REQUIRED.

## SUSPENDED CEILING EXHAUST FAN DETAIL

NOT TO SCALE

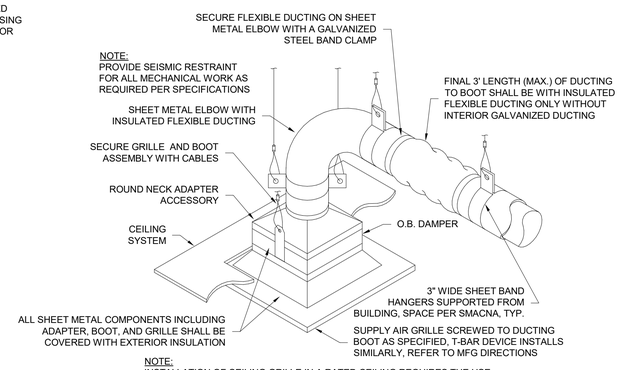


NOTE:
INSTALLATION OF CEILING GRILLE IN A RATED CEILING REQUIRES THE USE OF A CEILING RADIATION DAMPER. DAMPER SHALL BE INSTALLED IN THE SAME PLANE AS THE RATED ASSEMBLY PENETRATED AND FIRESTOPPED AS REQUIRED.

## TYPICAL SUPPLY AIR GRILLE

NOT TO SCALE

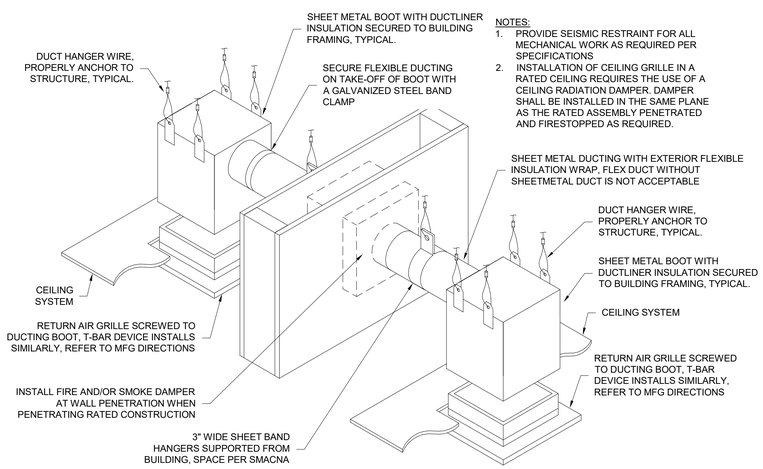


NOTES:
1. PROVIDE SEISMIC RESTRAINT FOR ALL MECHANICAL WORK AS REQUIRED PER SPECIFICATIONS
2. INSTALLATION OF CEILING GRILLE IN A RATED CEILING REQUIRES THE USE OF A CEILING RADIATION DAMPER. DAMPER SHALL BE INSTALLED IN THE SAME PLANE AS THE RATED ASSEMBLY PENETRATED AND FIRESTOPPED AS REQUIRED.

## TYPICAL TRANSFER AIR GRILLE (ROUND DUCT)

NOT TO SCALE

## HVAC EQUIPMENT SCHEDULE

| MARK | ITEM | MANUFACTURER | MODEL NO. | SPECIFICATIONS | REMARKS | OPERATING CONDITIONS | |
|---|---|---|---|---|---|---|---|
| DOAS-1 | SPLIT SYSTEM TO INCLUDE: | AAON | | | NOTES: 1,2,3,4,5,6,7,8,9 | SUMMER AMBIENT DB / WB (F) | 95 / 78 |
| | | | | | | WINTER AMBIENT DB / WB (F) | 16.9 / 13.9 |
| | | | | | | SUMMER RETURN DB / WB (F) | 80 / 67 |
| | | | | | | WINTER RETURN DB / WB (F) | 75 / 62 |
| | DOAS-1 INDOOR AIR HANDLER | | | | | SUPPLY AIR CFM | 1500.0 |
| | VERTICAL AIR HANDLER WITH GAS HEAT AND ENERGY RECOVERY WHEEL MODULE | AAON | V3-BRB-8-0-162C-7DS: EG2E-HH0-000-0A0-00A00UA-00-DAA0B0000 | INDOOR UNIT ELECTRICAL: 208V / 3-PH, 66 MCA 83 MCA, 90 MOCP | NOTE: 15 | OUTSIDE AIR CFM | 1500.0 |
| | | | | | | EXHAUST AIR CFM | 1000.0 |
| | | | | | | SUMMER ERW LAT DB / WB (F) | 83.1 / 69.4 |
| | INDOOR COIL | AAON | | 6-ROW INTERLACED DUAL CIRCUIT | | WINTER ERW LAT DB / WB (F) | 46.7 / 37.6 |
| | | | | | | CLG COIL EAT DB / WB (F) | 83.1 / 69.4 |
| | HOT GAS REHEAT COIL | AAON | | MODULATING HOT GAS REHEAT | | CLG COIL LAT DB / WB (F) | 49.4 / 49.2 |
| | | | | | | RHT COIL LAT DB (F) | 75.0 |
| | SUPPLY FAN | AAON | | 1500 CFM @ 0.75" ESP, 1.34 HP, 208V / 3-PH, 2522 RPM | | HTG COIL EAT DB / WB (F) (ELEC HT) | 46.7 / 37.6 |
| | | | | | | HTG COIL LAT DB / WB (F) (ELEC HT) | 90.7 / 57.7 |
| | EXHAUST FAN | AAON | | 1000 CFM @ 0.75" ESP, 1.34 HP, 208V / 3-PH, 1772 RPM | | ERW TOTAL CAPACITY CLG (MBH) | 33.0 |
| | | | | | | CLG COIL TOTAL CAPACITY (MBH) | 88.2 |
| | ELECTRIC HEAT | AAON | | 21.0 kW MODULATING SCR 208V / 3-PH | | CLG COIL SENS. CAPACITY (MBH) | 53.8 |
| | | | | | | RHT COIL TOTAL CAPACITY (MBH) | 40.6 |
| | | | | | | ERW TOTAL CAPACITY HTG (MBH) | 86.4 |
| | | | | | | ELEC HEAT TOTAL CAPACITY (MBH) | 71.7 |
| | DOAS-1 CONDENSING UNIT | | | | | | |
| | CONDENSING UNIT W/ FULLY MODULATING CAPACITY | AAON | CFA-009-B-A-8-DA00L: 0-00-E0-C0-AN0-D-QE0A-0000C00-0A0000DB | OUTDOOR UNIT ELECTRICAL: 208V / 3-PH, 42 MCA, 50 MOCP | NOTE: 14 | INDOOR UNIT WEIGHT (LBS.) | 1701.0 |
| | | | | | | OUTDOOR UNIT WEIGHT (LBS.) | 1069.0 |
| EF-01 | CEILING MOUNTED EXHAUST FAN | GREENHECK | SP-A200 | 200 CFM @ 0.25" S.P., 900 RPM, 2.0 SONES, 48 WATTS, 115V, 1-PH | NOTES: 10,11,12,13,14 | CONTROL - WALL MOUNTED ON/OFF SWITCH INTENDED TO OPERATE CONSTANTLY | |
| | | | | | | UNIT WEIGHT (LBS.) | 18.0 |
| EF-02 | CEILING MOUNTED EXHAUST FAN | GREENHECK | SP-A200 | 200 CFM @ 0.25" S.P., 900 RPM, 2.0 SONES, 48 WATTS, 115V, 1-PH | NOTES: 10,11,12,13,14 | CONTROL - WALL MOUNTED ON/OFF SWITCH INTENDED TO OPERATE INTERMITTENTLY | |
| | | | | | | UNIT WEIGHT (LBS.) | 18.0 |
| HOOD-1 | CAFÉ RANGE HOOD | DENLAR FIRE SUPPRESION HOODS | D1030-D-IF -NFPA 30"W x 20"D | 297-545 CFM VARIBLE SPEED FAN 5 MCA, 115V, 1-PH | NOTE: 17 | CONTROL - INTEGRAL VARIABLE SPEED DIAL | |
| | | | | | | UNIT WEIGHT (LBS) | 80.0 |
| L-01,02 | EXTRUDED ALUMINUM WEATHER LOUVER FLANGED | GREENHECK | EHH-401 28"W x 28"H | WIND DRIVEN RAIN WALL LOUVER | NOTE: 16 W/ INSECT SCREEN AND FLANGE | AIRFLOW (CFM) | 2500.0 |
| | | | | | | FREE AREA (S.F) | 3.7 |
| | | | | | | UNIT WEIGHT (LBS.) | 66.0 |

HVAC EQUIPMENT SCHEDULE NOTES: (ELECTRONIC SUBMITTALS WILL ONLY BE ACCEPTED AT SUBMITTALS@STRICKLANDENGINEERING.COM)

1. SYSTEM SHALL BE FURNISHED WITH A TRANSFORMER TO PROVIDE 24 VOLT POWER FOR ALL CONTROLS FOR THE SYSTEM.
2. UNIT SHALL INCLUDE DISPOSABLE 2-INCH THICK THROWAWAY PLEATED PRE-FILTER AND 4-INCH THICK THROWAWAY PLEATED FILTER (MERV-11). FILTERS SHALL INCLUDE NON-WOVEN COTTON FABRIC MEDIA WITH A METAL SUPPORT GRID AND HEAVY DUTY BEVERAGE BOARD ENCLOSING FRAME. CONTRACTOR SHALL INCLUDE (1) SET OF CONSTRUCTION FILTERS, (1) SET OF FILTERS TO BE INSTALLED AT THE COMPLETION OF CONSTRUCTION, AND (1) SET OF REPLACEMENT FILTERS TO OWNER.
3. THE OUTDOOR UNIT SHALL BE INSTALLED WITH MINIMUM 12" HIGH SUPPORT RISERS.
4. REFRIGERANT PIPING SHALL BE SIZED FOR EACH OUTDOOR UNIT AND EVAPORATOR AS REQUIRED BY THE MANUFACTURER. THE REFRIGERANT PIPING SHALL INCLUDE A SEALED TYPE LIQUID LINE FILTER-DRIER AND A SEALED TYPE SUCTION HOSE FILTER DRIER. THESE MATERIALS SHALL BE FURNISHED AND INSTALLED BY THE MECHANICAL CONTRACTOR.
5. REFRIGERANT PIPING SHALL BE TYPE "L" COPPER WITH BRAZED JOINTS. INSULATE REFRIGERANT PIPING WITH UV RATED CLOSED CELL ELASTOMERIC INSULATION IN ACCORDANCE WITH THE MANUFACTURER'S REQUIREMENTS. THESE MATERIALS SHALL BE FURNISHED AND INSTALLED BY THE MECHANICAL CONTRACTOR.
6. UNIT SHALL INCLUDE A ONE (1) YEAR PARTS AND LABOR WARRANTY FOR THE UNIT. COMPRESSOR(S) SHALL INCLUDE A WARRANTY FOR NOT LESS THAN FIVE (5) YEARS.
7. UNIT SHALL INCLUDE FACTORY PROVIDED CONTROL PANEL. CONTROLS SHALL BE EQUAL TO WATTMASTER VCCX SYSTEM WITH ALL COMPONENTS AS REQUIRED TO OPERATE IN ACCORDANCE WITH THE SEQUENCE OF OPERATIONS TO INCLUDE AT MINIMUM:
   - A. CONTROL ENCLOSURE CABINET FOR CENTRAL CONTROLS WITH MICROSOFT SURFACE TOUCHSCREEN TABLET INTERFACE, (A SINGLE TOUCH SCREEN FOR ALL EQUIPMENT IS ACCEPTABLE, BUT MUST INTERFACE WITH ALL EQUIPMENT) LOCATE AS INDICATED ON THE PLAN.
   - B. VCCX CONTROLLER AND LARGE EXPANSION MODULE
   - C. SUCTION PRESSURE TRANSDUCER(S)
   - D. SUPPLY AIR TEMPERATURE SENSOR
   - E. SPACE AIR TEMPERATURE SENSOR (LOCATE IN COMMON AREA SUCH AS A CORRIDOR)
   - F. SPACE AIR HUMIDITY SENSOR (LOCATE IN COMMON AREA SUCH AS A CORRIDOR)
   - G. OUTSIDE AIR TEMPERATURE SENSOR AND OUTSIDE AIR HUMIDITY SENSOR
   - H. DIGITAL ROOM SENSOR WITH TEMPERATURE AND HUMIDITY
   - I. BUILDING PRESSURE SENSOR
   - J. PROOF OF AIRFLOW
   - K. SAFETY SHUTDOWN
8. UNIT SHALL INCLUDE THE FOLLOWING AT MINIMUM:
   - A. UNIT SHALL INCLUDE MOTORIZED OUTSIDE AIR DAMPER / RETURN AIR DAMPER MIXING BOX
   - B. UNIT SHALL INCLUDE MODULATING HOT GAS REHEAT COIL FOR DEHUMIDIFICATION (2-POSITION NOT ACCEPTABLE)
   - C. UNIT SHALL INCLUDE SIGHT GLASS, COMPRESSOR ISOLATION VALVES, AND STAINLESS STEEL DRAIN PAN
   - D. LOW PRESSURE SWITCH TO CYCLE COMPRESSOR OFF IF REFRIGERANT PRESSURE DROPS BELOW ACCEPTABLE OPERATIONAL PRESSURE.
   - E. HIGH PRESSURE SWITCH TO CYCLE COMPRESSOR OFF IF REFRIGERANT PRESSURE RISES ABOVE ACCEPTABLE OPERATIONAL PRESSURE.
   - F. UNIT SHALL BE AHRI LISTED AND CERTIFIED (COIL ONLY CERTIFICATION IS NOT ACCEPTABLE)
   - G. UNIT SHALL INCLUDE INTEGRAL NON-FUSED DISCONNECT
   - H. HINGED ACCESS PANELS
   - I. CONDENSER COIL HAIL GUARDS
   - J. ALL SYSTEM FANS SHALL BE PROVIDED WITH VARIABLE FREQUENCY DRIVES (OR EC MOTOR)
   - K. 2 COMPRESSOR CIRCUITS WITH MINIMUM 6 ROW INTERLACED-CIRCUIT DX COIL, BOTH COMPRESSORS SHALL BE VARIABLE CAPACITY SCROLL COMPRESSOR
   - L. UNIT SHALL INCLUDE SCR MODULATING ELECTRIC RESISTANCE HEATING
9. CONTROL SYSTEM SHALL BE INSTALLED W/ SHIELDED CABLE INSTALLED IN EMT CONDUIT PER ELECTRICAL SPECIFICATIONS AND SHALL BE RUN CONCEALED WITHIN WALLS AND CEILING SPACE.
10. UNIT SHALL INCLUDE A FAN SPEED CONTROLLER.
11. MOTOR SHALL INCLUDE PERMANENTLY LUBRICATED, SEALED BALL BEARINGS.
12. UNIT SHALL INCLUDE ROUND DUCT ADAPTER AND BACKDRAFT DAMPER.
13. UNIT SHALL INCLUDE INSULATED HOUSING.
14. UNIT SHALL BE U.L. LISTED WITH THERMAL OVERLOAD AND A FACTORY INSTALLED DISCONNECT SWITCH
15. UNIT SHALL BE U.L. LISTED WITH THERMAL OVERLOAD AND A FIELD INSTALLED DISCONNECT SWITCH.
16. LOUVER SHALL INCLUDE AN ALUMINUM BIRD SCREEN AND 3-COAT KYNAR FINISH, COLOR AS SELECTED BY THE ARCHITECT.
17. HOOD SHALL BE WALL MOUNTED WITH THE BOTTOM OF THE MOUNTING BRACKET 18"-26" ABOVE THE STOVETOP. HOOD SHALL BE OF STAINLESS STEEL CONSTRUCTION (18 & 20 GA. #4 POLISHED 304) WITH NO SHARP EDGES AND A BRUSHED FINISH. HOOD SHALL INCLUDE PREINSTALLED AUTOMATIC FIRE SUPPRESSION SYSTEM. HOOD SUPPRESSION ACTIVATION SHALL BE BY 212°F RATED FUSIBLE LINKS. HOOD EXTINGUISHING AGENT SHALL BE WET CHEMICAL IN A PRESSURIZED CYLINDER. HOOD SHALL BE FURNISHED WITH AN INLINE DUCTED FAN WITH AIR DELIVERY OF 499 CFM. FAN SPEED WILL BE CONTROLLED BY AN INFINITELY VARIABLE SWITCH. HOOD SHALL BE ETL LABELED TO UL300A AND UL507 TEST STANDARDS. FAN MOTOR TO BE PERMANENTLY LUBRICATED AND MEET UL507 STANDARDS. HOOD SHALL AUTOMATICALLY DISCONNECT RANGE POWER/FUEL UPON SYSTEM DISCHARGE, VIA ELECTRIC RELAY. HOOD SHALL HAVE TWO ALARM CONNECTION TERMINALS PREINSTALLED (LOCAL AND REMOTE ALARMS), PLUS AN INTERNAL AUDIBLE BUZZER (90 DBA). HOOD LIGHTING SHALL BE PROVIDED BY 60W INCANDESCENT SHATTER-PROOF BULB. HOOD SHALL INCLUDE REMOTE PULL STATION ACCESSORY AND NSF APPROVAL.

## GRILLES, REGISTERS AND DIFFUSERS SCHEDULE

| MARK | DESCRIPTION | MANUFACTURER | MODEL | FACE SIZE | NECK SIZE | NECK WIDTH | NECK HEIGHT | BLADE DESIGN THICKNESS | BLADE DESIGN SPACING | DEFLECTION ANGLE SINGLE | DEFLECTION ANGLE DOUBLE | ORIENTATION | INSTALLATION BORDER TYPE | OPTIONS FILTER DESCRIPTION | NOTES |
|---|---|---|---|---|---|---|---|---|---|---|---|---|---|---|---|
| RG1 | GRID CEILING MOUNTED EXTRUDED ALUMINUM RETURN GRILLE WITH ALUMINUM DAMPER | METALAIRE | RHE-6 | 24x24 | | 10" | 10" | 1/8" | 3/4" | 35.0° | | LONG | TYPE 6 (LAY-IN) | | 1,2 |
| RG1 | GRID CEILING MOUNTED EXTRUDED ALUMINUM RETURN GRILLE WITH ALUMINUM DAMPER | METALAIRE | RHE-6 | 24x24 | | 14" | 14" | 1/8" | 3/4" | 35.0° | | LONG | TYPE 6 (LAY-IN) | | 1,2 |
| RG2 | SURFACE CEILING MOUNTED EXTRUDED ALUMINUM RETURN GRILLE WITH ALUMINUM DAMPER | METALAIRE | RHE-1 | | | 6" | 6" | 1/8" | 3/4" | 35.0° | | LONG | TYPE 1 (SURFACE) | | 1,2 |
| RG3 | GRID CEILING MOUNTED EXTRUDED ALUMINUM RETURN GRILLE WITH ALUMINUM DAMPER AND FILTER HOUSING | METALAIRE | RHF-6 | 24x24 | | 20" | 20" | 1/8" | 3/4" | 35.0° | | LONG | TYPE 6 (LAY-IN) | 1" FILTER | 1,2,3 |
| RG4 | GRID CEILING MOUNTED EXTRUDED ALUMINUM RETURN GRILLE WITH ALUMINUM DAMPER AND FILTER HOUSING | METALAIRE | RHE-6 | 24x24 | | 20" | 20" | 1/8" | 3/4" | 35.0° | | SHORT | TYPE 6 (LAY-IN) | | 1,2 |
| SD1 | SURFACE MOUNTED ALUMINUM DIRECTIONAL (ONE-WAY) SUPPLY DIFFUSER WITH ROUND NECK ADAPTER WITH ALUMINUM DAMPER | METALAIRE | 5500-1 | 6x6 | 6" | | | | | | | | TYPE 1 (SURFACE) | | 1,2 |
| SD1 | GRID MOUNTED ALUMINUM DIRECTIONAL (FOUR-WAY) SUPPLY DIFFUSER WITH ROUND NECK ADAPTER WITH ALUMINUM DAMPER | METALAIRE | 5500-6 | 24x24 | 6" | | | | | | | | TYPE 6 (LAY-IN) | | 1,2 |
| SD1 | GRID MOUNTED ALUMINUM DIRECTIONAL (FOUR-WAY) SUPPLY DIFFUSER WITH ROUND NECK ADAPTER WITH ALUMINUM DAMPER | METALAIRE | 5500-6 | 24x24 | 8" | | | | | | | | TYPE 6 (LAY-IN) | | 1,2 |
| SD1 | GRID MOUNTED ALUMINUM DIRECTIONAL (FOUR-WAY) SUPPLY DIFFUSER WITH ROUND NECK ADAPTER WITH ALUMINUM DAMPER | METALAIRE | 5500-6 | 24x24 | 10" | | | | | | | | TYPE 6 (LAY-IN) | | 1,2 |
| SG1 | SURFACE MOUNTED ALUMINUM DOUBLE DEFLECTION SUPPLY GRILLE WITH ALUMINUM DAMPER | METALAIRE | V4004-1 | | | 6" | 6" | 1/8" | 3/4" | 0.0° | 0.0° | DOUBLE-LONG | TYPE 1 (SURFACE) | | 1,2 |

AIR DEVICE NOTES: (ELECTRONIC SUBMITTALS WILL ONLY BE ACCEPTED AT SUBMITTALS@STRICKLANDENGINEERING.COM)

1. GRILLE SHALL BE FACTORY FINISHED WITH A WASHABLE ENAMEL PAINT. FIELD SPRAY ALL GALVANIZED SHEET METAL AND FIRE DAMPERS BEHIND GRILLE WHICH ARE EXPOSED TO SIGHT WITH FLAT BLACK ENAMEL PAINT.
2. GRILLE SHALL INCLUDE AN ALUMINUM OPPOSED BLADE DAMPER. THE O.B. DAMPER SHALL BE FINISHED THE SAME AS GRILLE.
3. GRILLE SHALL INCLUDE AN INTEGRAL FILTER HOUSING FOR 1-INCH FILTER THICKNESS. FILTER GRILLE SHALL HAVE HAND OPERATED TOOL-LESS DESIGN TO ALLOW FILTER CHANGE FROM THE ROOM SIDE OF THE GRILLE.


STRICKLAND ENGINEERING
CIVIL MECHANICAL ELECTRICAL ENGINEERING
113 WEST MAIN STREET JACKSON, MISSOURI 63755
TEL: 573-243-4080 FAX: 573-243-2191



POINSETT COUNTY COURT ANNEX
**POINSETT COUNTY**
Harrisburg, Arkansas


BRACKETT KRENNERICH architects
100 East Huntington Ave. Suite D P.O. Box 1655 870-932-0571 Fax 870-932-0975 www.bkarchts.com


| Revision Schedule | | | |
|---|---|---|---|
| Tag | Rev. Description | Rev. Date | Issued by |

STATE OF ARKANSAS REGISTERED PROFESSIONAL ENGINEER MARK D. STRICKLAND No. 11187
07/26/2024
MARK D. STRICKLAND, P.E.
ENGINEER LICENSE NO. 11187

Commission Number 2237 (SE 23-232)

M105

July 26, 2024

HVAC SCHEDULES AND DETAILS

C:\Users\cwright\Documents\WPE24_Poinsett
Central\cwright@strickandengineering.com.rvt
8/2/2024 10:26:35 AM

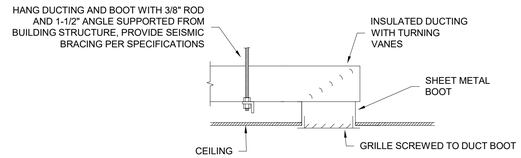


## TYPICAL RETURN AIR AND EXHAUST AIR GRILLE

NOT TO SCALE

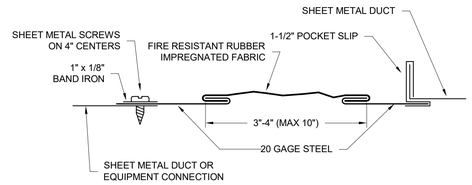


## TYPICAL FLEXIBLE CONNECTION

NOT TO SCALE

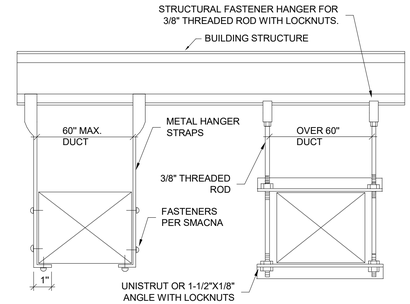


NOTE:
SIZE AND RATING OF HANGERS AND SUPPORTS SHALL BE PER THE LATEST SMACNA STANDARDS

## TYPICAL SUSPENDED DUCT MOUNTING DETAIL

NOT TO SCALE

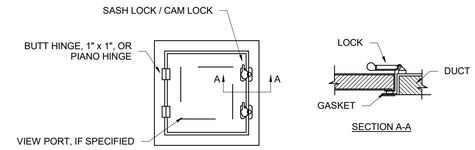


| | DOOR SIZE | NO. HINGES | NO. LOCKS | METAL GAGE | | |
|---|---|---|---|---|---|---|
| | | | | FRAME | DOOR | BACK |
| 2" W.G. STATIC AND LESS | 12" x 12"<br>16" x 20"<br>24" x 24" | 2<br>2<br>3 | 1-S<br>2-S<br>2-S | 24<br>22<br>22 | 26<br>24<br>22 | 26<br>26<br>26 |
| 3" W.G. STATIC | 12" x 12"<br>16" x 20"<br>24" x 24" | 2<br>2<br>3 | 1-S<br>1-S,1-T,1-B<br>2-S,1-T,1-B | 22<br>20<br>20 | 22<br>20<br>20 | 26<br>26<br>24 |
| 4" W.G. TO 10" W.G. | 12" x 12"<br>16" x 20"<br>24" x 24" | 2<br>3<br>3 | 1-S,1-T,1-B<br>2-S,1-T,1-B<br>2-S,2-T,2-B | 20<br>18<br>18 | 20<br>18<br>18 | 26<br>24<br>24 |
| S = SIDE OPPOSITE HINGES, T = TOP, B = BOTTOM | | | | | | |

## DUCT ACCESS DOORS

NOT TO SCALE

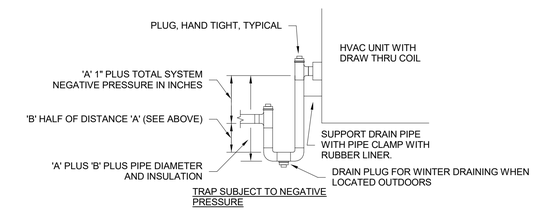


TRAP SUBJECT TO NEGATIVE PRESSURE

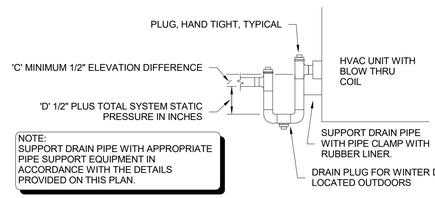


NOTE:
SUPPORT DRAIN PIPE WITH APPROPRIATE PIPE SUPPORT EQUIPMENT IN ACCORDANCE WITH THE DETAILS PROVIDED ON THIS PLAN.

TRAP SUBJECT TO POSITIVE PRESSURE

## TYPICAL CONDENSATE TRAP DETAILS

NOT TO SCALE

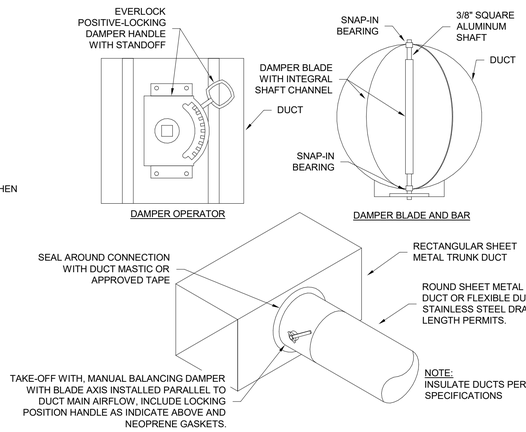


## TYPICAL ROUND BRANCH DUCT TAKEOFF

NOT TO SCALE

NOTE:
REFER TO ARCHITECTURAL DOCUMENTS FOR LOUVER HEAD, JAMB, AND SILL DETAILS.

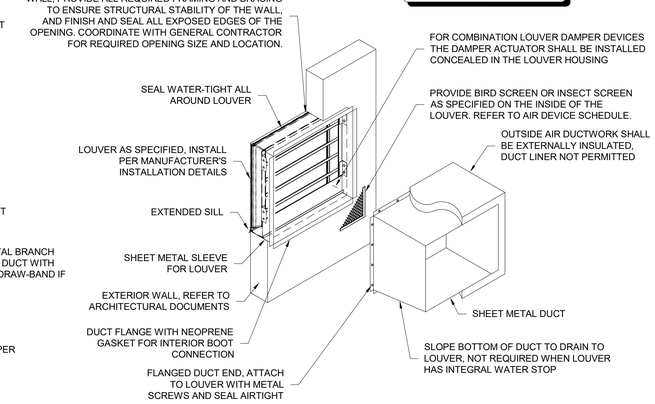


## WALL LOUVER INSTALLATION DETAIL

NOT TO SCALE

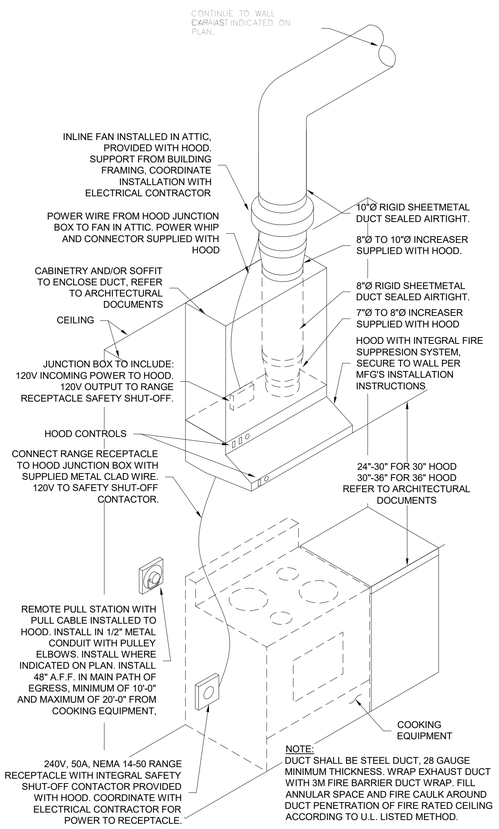


NOTE:
DUCT SHALL BE STEEL DUCT, 28 GAUGE MINIMUM THICKNESS. WRAP EXHAUST DUCT WITH 3M FIRE BARRIER DUCT WRAP. FILL ANNULAR SPACE AND FIRE CAULK AROUND DUCT PENETRATION OF FIRE RATED CEILING ACCORDING TO U.L. LISTED METHOD.

## FIRE SUPPRESSION RANGE HOOD

NOT TO SCALE

NOTE:
ALL WORK BY PLUMBING CONTRACTOR EXCEPT AS NOTED. MECHANICAL CONTRACTOR SHALL FURNISH & INSTALL CONDENSATE DRAIN PIPING TO RISER.

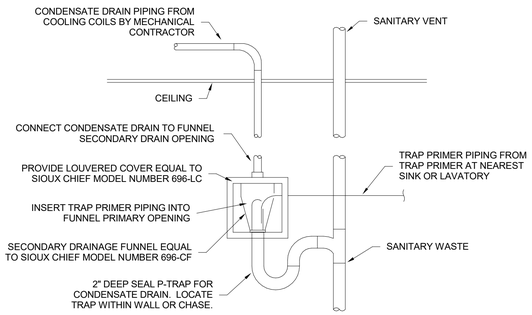


## CONDENSATE DRAIN IN WALL DETAIL

NOT TO SCALE

NOTE:
PIPES REST ON A STRUT SYSTEM WHICH IS MADE OF HOT-DIP GALVANIZED STEEL. THE PIPE SUPPORT BASE SHALL BE POLYCARBONATE RESIN, AND ALL OTHER METAL PARTS ARE MADE OF HOT-DIP GALVANIZED OR STAINLESS STEEL. PIPE SHALL BE SECURED TO THE STRUT WITH U-BOLTS, BUT NOT FASTENED TIGHTLY IN ORDER TO ALLOW EXPANSION AND CONTRACTION MOVEMENT OF THE PIPING.

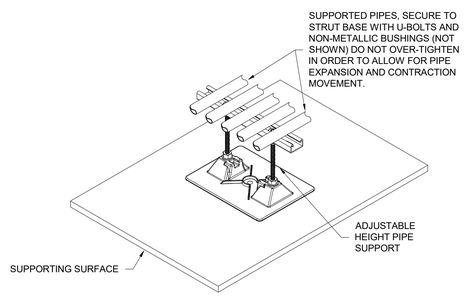


## MULTIPLE PIPE SUPPORT

NOT TO SCALE

GENERAL NOTES:

1. ALL CHANNEL FRAME SHALL BE SELECTED FOR THE EQUIPMENT LOAD IT IS TO SUPPORT BASED ON THE SPAN THE CHANNEL FRAME WILL COVER BETWEEN BUILDING STRUCTURAL COMPONENTS.
2. CONNECTION OF EQUIPMENT TO CHANNEL FRAME SUPPORT SHALL BE WITH THREADED ROD(S), WASHER(S), NUT(S), LOCKNUT(S), AND OTHER HARDWARE APPROVED FOR THE EQUIPMENT LOAD. MANUFACTURER SPECIFIC SUPPORT HARDWARE IS ACCEPTABLE WHEN RATED FOR THE EQUIPMENT LOAD.
3. IT IS ACCEPTABLE TO CONNECT MORE THAN ONE POINT OF EQUIPMENT SUPPORT TO A SINGLE CHANNEL FRAME MEMBER WHEN THE CHANNEL FRAME IS RATED FOR THE COMBINED LOAD.

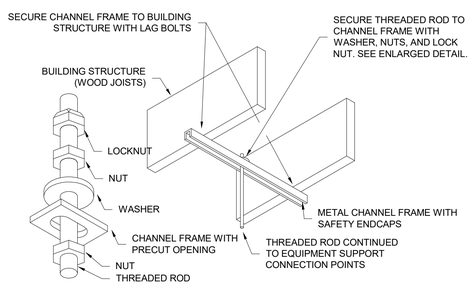


## CHANNEL FRAME EQUIPMENT SUPPORT

NOT TO SCALE


STRICKLAND ENGINEERING
CIVIL MECHANICAL ELECTRICAL ENGINEERING
113 WEST MAIN STREET JACKSON, MISSOURI 63755
TEL: 573-243-4080 FAX: 573-243-2191


STRICKLAND ENGINEERING, LC AR LICENSE #1005

POINSETT COUNTY COURT ANNEX
**POINSETT COUNTY**
**Harrisburg, Arkansas**

BRACKETT KRENNERICH architects

| Revision Schedule | | | |
|---|---|---|---|
| Tag | Rev. Description | Rev. Date | Issued by |

STATE OF ARKANSAS ★★★ REGISTERED PROFESSIONAL ENGINEER ★★★ MARK D. STRICKLAND No. 11187
07/26/2024
MARK D. STRICKLAND, P.E.
ENGINEER LICENSE NO. 11187

Commission Number 2237 (SE 23-232)

M106

July 26, 2024


100 East Huntington Ave. Suite D P.O. Box 1655 870-932-0571 Fax 870-932-0975 www.bkarchts.com


HVAC DETAILS

## DOMESTIC FIXTURE SCHEDULE

| ID | DESCRIPTION | MANUFACTURER | MODEL | MATERIAL DESCRIPTION | FINISH | TRIM MANUFACTURER | TRIM MODEL | SPECIFICATION |
|---|---|---|---|---|---|---|---|---|
| EWC-1 | WATER COOLER - DUAL HEIGHT | MURDOCH | A172408F-UG-VR-BF12-BCD-WF1EZ | GALVANIZED STEEL | STAINLESS STEEL CABINET | | | TWO LEVEL WALL HUNG WATER COOLER WITH BOTTLE FILLING STATION. THE UNIT SHALL BE COMPLETE WITH CABINET, MOUNTING FRAME, SELF CLOSING EASY TOUCH SIDE AND FRONT PUSHBAR CONTROLS, FLEXIGUARD SAFETY BUBBLER, REFRIGERATING SYSTEM, AIR COOLED, 120 VOLT, 60 CYCLE, SINGLE PHASE POWER CONNECTION, FULLY AUTOMATIC, COMPLETE AND READY TO OPERATE. |
| HYD-1 | EXTERIOR WALL HYDRANT | WOODFORD | 65C | | CHROME | | | VERIFY LENGTH, STANDARD W/VACUUM BREAK BACKFLOW PREVENTER, LOOSE KEY OPERATOR, FREEZELESS |
| LAV-1A | LAVATORY ADA | AMERICAN STANDARD | 0495.221 | WHITE VITREOUS CHINA | WHITE | TOTO | TEL105D10EM#CP | UNDERCOUNTER MOUNT, FAUCET HOLES ON 4" CENTERS. DECK-MOUNTED FAUCET WITH SENSOR, WATER TURBINE POWER WITH VANDAL RESISTANT SPRAY, EXTERNAL ASSE 1070 COMPLIANT THERMOSTATIC MIXING VALVE, GRID DRAIN, LOOSE KEY ANGLE STOPS AND SUPPLIES, DEARBORN 507 OFFSET DRAIN & P-TRAP |
| MB-1 | MOP BASIN | FIAT | MSB-2424 | MOLDED STONE | WHITE | FIAT | 830-AA | 832-AA HOSE & BRACKET, QDC-3XH QUICK DRAIN, E-77-AA VINYL BUMPERGUARDS, MSG-3624 STAINLESS STEEL WALL GUARDS, GROUT LEVEL AND SILICONE CAULK ALL CRACKS AT WALL AND FLOOR |
| OB-1 | ICE MAKER OUTLET BOX | SIOUX CHIEF | 696-RG1010MF | ABS PLASTIC | WHITE | | | FULLY RECESSED FIRE RATED ICE MAKER SUPPLY BOX WITH COVER. PROVIDE 1/4 TURN BALL VALVES AND WATER HAMMER ARRESTORS IN BOX. |
| SNK-1 | DUAL BOWL SINK | JUST | DLADA2233A653-J | STAINLESS STEEL | STAINLESS STEEL | JUST | JWF-200-R70-VR | DOUBLE COMPARTMENT, ADA COMPLIANT, SELF-RIMMING, 18 GAUGE, SWIVEL FAUCET, TWO J-ADA-35-FS STRAINERS, P-TRAP, TAILPIECES, SUPPLIES AND STOPS, INSULATE WATER AND WASTE TO MEET ADA REQUIREMENTS. |
| UR-1A | URINAL, ADA | AMERICAN STANDARD | 6590.001 | WHITE VITREOUS CHINA | WHITE | SLOAN | 186-0.5-CP-YK | 0.5GPF, TOP SPUD FLUSH VALVE, ZURN CARRIER, SILICONE CAULK AT WALL, REFER TO ARCHITECTURAL FOR MOUNTING HEIGHT |
| WC-1A | FLOOR MOUNT FLUSH VALVE TOILET, ADA | AMERICAN STANDARD | 3043.001 | WHITE VITREOUS CHINA | WHITE | SLOAN | 111-1.28-CP-YK | 1.28 GPF, ELONGATED BOWL, BEMIS 2155CT WHITE SEAT, 16-1/2" RIM |

## FLOOR FIXTURE SCHEDULE

| ID | DESCRIPTION | MANUFACTURER | MODEL | MATERIAL DESCRIPTION: DRAIN BODY | MATERIAL DESCRIPTION: STRAINER | SPECIFICATION |
|---|---|---|---|---|---|---|
| COTG-1 | GRADE CLEANOUT | SIOUX CHIEF | 834-64DIR | EPOXY COATED CAST IRON | DUCTILE IRON | SET TO FINISH GRADE, SIZE TO PIPING |
| FCO-1 | FLOOR CLEANOUT | SIOUX CHIEF | 834-64DNR | EPOXY COATED CAST IRON | NICKEL BRONZE | SET TO FLOOR FINISH, SIZE TO PIPING |
| FD-1 | FLOOR DRAIN | SIOUX CHIEF | 832-64DNR | EPOXY COATED CAST IRON | NICKEL BRONZE | SET TO FLOOR FINISH, INSTALL TRAP SEAL DEVICE IN LIEU OF TRAP PRIMER VALVE |
| FD-1 | FLOOR DRAIN | SIOUX CHIEF | 832-64DNR | EPOXY COATED CAST IRON | NICKEL BRONZE | SET TO FLOOR FINISH, INSTALL TRAP SEAL DEVICE IN LIEU OF TRAP PRIMER VALVE |

## ELECTRIC WATER HEATER SCHEDULE

| ID | MANUFACTURER | MODEL NO. | HEATING CAP | ELECTRIC HEAT EXCHANGER WATERSIDE STORAGE: RECOVERY | VOL | MAX TEMP RISE | REMARKS |
|---|---|---|---|---|---|---|---|
| WH-1 | AO SMITH | DEL-30 | 4.5 kW | 23.0 gal/h | 36.0 gal | 80 °F | PROVIDE ASSE 1017 COMPLIANT MIXING VALVE; POWERS SERIES LFSH OR EQUAL. |

## GENERAL MECHANICAL SYMBOLS

- REVISION NUMBER - SHOWN ON PLANS
- POINT WHERE NEW CONNECTS TO EXISTING
- NUMBER OF DETAIL ON SHEET
- NUMBER OF SHEET WHERE DETAIL APPEARS
- KEYNOTE
- CONTINUATION SYMBOL
- Room 4 — ROOM NAME AND NUMBER
- ITEM TO BE DEMOLISHED
- AREA NOT IN CONTRACT
- 2" — PIPE SIZE TAG (DIAMETER)
- ABOVE GROUND PIPING
- 1/8" / 12" SLOPE — PIPE SLOPE TAG
- BELOW GROUND PIPING
- INVERT: -105' - 1" — PIPE INVERT ELEVATION TAG
- (E) — EXISTING PIPE TAG
- PIPING BEING DEMOLISHED

## ABBREVIATIONS

| | | | |
|---|---|---|---|
| Ø | ROUND | LVR | LOUVER |
| ABV | ABOVE | LWT | LEAVING WATER TEMPERATURE |
| AC | AIR CONDITIONING | M/A | MIXED AIR |
| AD | AREA DRAIN | MAX | MAXIMUM |
| ADD | ADDENDUM | MBH | ONE THOUSAND BTU PER HOUR |
| AFF | ABOVE FINISHED FLOOR | MCF | ONE THOUSAND CUBIC FEET |
| AFUE | ANNUAL FUEL UTILIZATION EFFICIENCY | MD | MOTORIZED DAMPER |
| ALT | ALTERNATE | MECH | MECHANICAL |
| AP | ACCESS PANEL | MFR | MANUFACTURER |
| ARCH | ARCHITECT/ARCHITECTURAL | MIN | MINIMUM |
| BFF | BELOW FINISHED FLOOR | MISC | MISCELLANEOUS |
| BLW | BELOW | MTR | MOTOR |
| BTU | BRITISH THERMAL UNITS | MU/A | MAKE-UP/AIR |
| BTUH | BRITISH THERMAL UNITS PER HOUR | NC | NOISE CRITERIA |
| CAP | CAPACITY | NC | NORMALLY CLOSED |
| CB | CATCH BASIN | NIC | NOT IN CONTRACT |
| CFM | CUBIC FEET PER MINUTE | NO | NUMBER |
| CLG | CEILING | NO | NORMALLY OPEN |
| CO | CLEAN OUT | NTS | NOT TO SCALE |
| CW | COLD WATER | O | OXYGEN |
| D | DEGREE | O/A | OUTSIDE AIR |
| DB | DRY BULB | ORD | OVERFLOW ROOF DRAIN |
| DIA | DIAMETER | PD | PRESSURE DROP |
| DN | DOWN | PIV | POST INDICATOR VALVE |
| DW | DISTILLED WATER | PLBG | PLUMBING |
| EA | EACH | PRESS | PRESSURE |
| EAT | ENTERING AIR TEMPERATURE | PRV | PRESSURE REDUCING VALVE |
| ELEC | ELECTRICAL | PSI | POUNDS PER SQUARE INCH |
| EQUIP | EQUIPMENT | PSIG | POUNDS PER SQUARE INCH GAUGE |
| EWC | ELECTRIC WATER COOLER | PWR | POWER |
| EWT | ENTERING WATER TEMPERATURE | R | DUCT RISER |
| E/A | EXHAUST AIR | R/A | RETURN AIR |
| EXIST | EXISTING | RCP | RADIANT CEILING PANEL |
| F | DEGREES FAHRENHEIT | RD | ROOF DRAIN |
| FCO | FLOOR CLEAN OUT | REC | RECESSED |
| FD | FLOOR DRAIN | RED | REDUCER |
| FD | FIRE DAMPER | RH | RELATIVE HUMIDITY |
| FDV | FIRE DEPARTMENT VALVE | RL/A | RELIEF AIR |
| FL | FLOOR | RM | ROOM |
| FO | FUEL OIL | RPM | REVOLUTIONS PER MINUTE |
| FOV | FUEL OIL VENT | RW | RAIN WATER |
| FOR | FUEL OIL RETURN | SF | SQUARE FOOT |
| FOS | FUEL OIL SUPPLY | S/A | SUPPLY AIR |
| FPM | FEET PER MINUTE | SAN | SANITARY |
| FS | FLOOR SINK | SF | SQUARE FOOT |
| FT | FOOT/FEET | SD | SMOKE DAMPER |
| FTR | FIN TUBE RADIATION | SM | SURFACE MOUNT |
| GAL | GALLON | SP | STANDPIPE |
| GC | GENERAL CONTRACTOR | SP | STATIC PRESSURE |
| GPM | GALLONS PER MINUTE | STM | STEAM |
| GW | GREASE WASTE | T | THERMOSTAT |
| HB | HOSE BIB | TD | TEMPERATURE DROP |
| HP | HORSE POWER | TDR | TRENCH DRAIN |
| HTG | HEATING | TEMP | TEMPERATURE |
| HTR | HEATER | TYP | TYPICAL |
| HW | HOT WATER | UG | UNDERGROUND |
| HYD | HYDRANT | VAC | VACUUM |
| ID | INDIRECT | V | VENT |
| IN | INCH | VAV | VARIABLE AIR VOLUME |
| INV | INVERT | VENT | VENTILATION |
| LB | POUND | VTR | VENT THROUGH ROOF |
| LB/HR | POUNDS PER HOUR | W | WASTE |
| LAT | LEAVING AIR TEMPERATURE | WB | WET BULB |
| LP | LOW PRESSURE | WCO | WALL CLEAN OUT |
| LPG | LIQUEFIED PETROLEUM GAS | WH | WALL HYDRANT |

## EQUIPMENT ABBREVIATIONS

| | | | |
|---|---|---|---|
| AC | AIR CONDITIONING UNIT | ET | EXPANSION TANK |
| ACCU | AIR COOLING CONDENSING UNIT | EWH | ELECTRIC WATER HEATER |
| AHU | AIR HANDLING UNIT | FCU | FAN COIL UNIT |
| AS | AIR SEPARATOR | FP | FIRE PUMP |
| B | BOILER | GI | GREASE INTERCEPTOR |
| CH | CHILLER | GRV | GRAVITY ROOF VENTILATOR |
| CT | COOLING TOWER | HWP | HEATING WATER PUMP |
| CUH | CABINET UNIT HEATER | HRU | HEAT RECOVERY UNIT |
| CHWP | CHILLED WATER PUMP | PRV | POWER ROOF VENTILATOR |
| DBP | DOMESTIC WATER BOOSTER PUMP | RE | RETURN/EXHAUST FAN |
| DC | DUCT MOUNTED COIL | RTU | ROOFTOP UNIT |
| DCP | DOMESTIC WATER CIRCULATING PUMP | SP | SUMP PUMP |
| EF | EXHAUST FAN | UH | UNIT HEATER |
| EDC | ELECTRIC DUCT COIL | WH | WATER HEATER |

## PLUMBING AND PIPING SYMBOLS

- CHWR — CHILLED WATER RETURN
- CHWS — CHILLED WATER SUPPLY
- CD — CONDENSATE DRAINAGE
- CWR — CONDENSER WATER RETURN
- CWS — CONDENSER WATER SUPPLY
- GWR — GEOTHERMAL WATER RETURN
- GWS — GEOTHERMAL WATER SUPPLY
- HWR — HEATING WATER RETURN
- HWS — HEATING WATER SUPPLY
- G — NATURAL GAS
- PG — PROPANE GAS
- REF-L — REFRIGERANT-LIQUID
- REF-S — REFRIGERANT-SUCTION
- REF-HG — REFRIGERANT-HOT GAS
- STM — STEAM
- CDR — CONDENSATE RETURN
- CWV — COMBINATION WASTE & VENT
- CA — COMPRESSED AIR
- CW — DOMESTIC COLD WATER
- H-CW — HARD COLD WATER
- S-CW — SOFT COLD WATER
- F-CW — FILTERED COLD WATER
- RO — REVERSE OSMOSIS WATER
- HW — HOT WATER
- HW 140° — HOT WATER 140°
- HW-R — HOT WATER RECIRCULATION
- HW-R 140° — HOT WATER RECIRCULATION 140°
- GV — GREASE VENT
- GW — GREASE WASTE
- IW — INDIRECT WASTE
- OV — OIL VENT
- OW — OIL WASTE
- PD — PUMP DISCHARGE
- V — SANITARY VENT
- SS — SANITARY SEWER
- SHWR — SOLAR HOT WATER RETURN
- SHWS — SOLAR HOT WATER SUPPLY
- SD — STORM DRAINAGE
- OSD — OVERFLOW STORM DRAINAGE

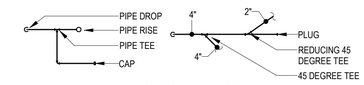


**PIPE ACCESSORY TAGS**

- 2" DOM. WM — DOMESTIC WATER METER
- 2" M-CNTRL — MOTORIZED CONTROL VALVE
- 2" BALANCING — BALANCING VALVE
- 2" 3-WAY CNTRL — 3 WAY MOTORIZED CONTROL VALVE
- 2" SHUTOFF — 1/4 TURN BALL VALVE
- 2" PRV — PRESSURE REDUCING VALVE
- 2" CHECK — CHECK VALVE
- 3/8" SOLENOID — REFRIGERANT SOLENOID VALVE
- 2" TMV — 3-WAY MIXING VALVE
- 2" BUTTERFLY — BUTTERFLY VALVE

**DRAIN TAGS**

DRAIN SIZE

- FLOOR DRAIN — 4" FD-1 — TYPE (SEE SCHEDULE) — 4" AD-6 — AREA DRAIN
- FLOOR DRAIN — 4" FD-3P — "P" - INDICATES PRIMER CONNECTION — 4" SD-29 — DECK DRAIN
- FLOOR SINK — 4" FS-4 — 4" SD-12 — FLOW CONTROL DRAIN
- HUB DRAIN — 4" FD-13 — 8 WFU — FIXTURE UNITS — 4" SD-15 — STORM DRAIN
- ROOF AREA SERVED BY DRAIN — 4000 SF — 6" SD-1 — COMBINATION DRAINS

**PLUMBING FIXTURE TAGS**

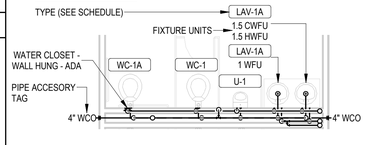


## PROJECT GENERAL NOTES

1. COORDINATE INSTALLATION OF PIPING, DUCTWORK, CONDUIT, LIGHTS, CABLE TRAY, STRUCTURE, AND EQUIPMENT TO PREVENT CONFLICTS.
2. THE CONTRACTOR SHALL BE FAMILIAR WITH ALL THE CONDITIONS BOTH EXISTING AND THOSE ILLUSTRATED BY THESE DOCUMENTS AS WELL AS THOSE WHICH CAN BE REASONABLY ANTICIPATED INCLUDING, BUT NOT LIMITED TO ARCHITECTURAL, ELECTRICAL, VENTILATION, PLUMBING, AND OTHER SYSTEMS INVOLVED ON THIS PROJECT.
3. PRIOR TO CONSTRUCTING OPENINGS THRU ROOF, WALLS OR FLOORS, COORDINATE WITH GENERAL CONTRACTOR AND ALL OTHER TRADES. COORDINATE WITH GENERAL CONTRACTOR TO PATCH AND/OR REPAIR OPENINGS. DO NOT CUT EXISTING STRUCTURAL ELEMENTS.
4. FINAL PRODUCT SHALL BE A COMPLETE AND FUNCTIONING SYSTEM, AND SHALL CONFORM TO ALL REQUIREMENTS OF APPLICABLE FEDERAL, STATE, AND LOCAL CODES, INCLUDING BUT NOT LIMITED TO THE INTERNATIONAL BUILDING CODE AND INTERNATIONAL MECHANICAL CODE.
5. LOCATE EQUIPMENT REQUIRING ACCESS 2'-0" MAXIMUM ABOVE CEILING.
6. ALL ROOF MOUNTED EQUIPMENT SHALL BE A MINIMUM 10'-0" FROM EDGE OF ROOF.
7. LOCATE DUCTWORK, PIPING AND MECHANICAL EQUIPMENT AWAY FROM THE SPACE ABOVE ELECTRICAL PANELS. TRANSFORMERS AND OTHER ELECTRICAL EQUIPMENT.
8. FIRE SEAL AROUND DUCT AND PIPING PENETRATIONS OF FIRE RATED WALLS. REFER TO SPECIFICATION.
9. PROVIDE SLEEVES AND/OR OPENINGS TO RUN PIPES AND DUCTS THROUGH FOUNDATIONS, FLOORS, WALLS, AND ROOF.
10. ADJUST PIPING AND DUCTWORK SIZES TO PROPERLY CONNECT TO MECHANICAL EQUIPMENT.
11. REFER TO PLUMBING SERIES DRAWINGS FOR GAS PIPING.
12. PIPE SIZES SHOWN SHALL BE CONTINUED IN THE DIRECTION OF FLOW UNTIL ANOTHER SIZE IS SHOWN.
13. FOR DETAILS, EQUIPMENT CONNECTIONS, AND PIPE SIZES NOT SHOWN ON THE SEGMENTS, REFER TO DETAILS, SCHEDULES, AND SPECIFICATIONS.
14. INSTALL ALL EQUIPMENT IN ACCORDANCE WITH THE RESPECTIVE MANUFACTURER'S WRITTEN INSTALLATION INSTRUCTIONS, AT A LEVEL OF QUALITY AND WORKMANSHIP CONSISTENT WITH THE SPECIFICATIONS.
15. LOCATIONS OF PIPING, DUCTWORK AND EQUIPMENT AS INDICATED ON THE DRAWING, ARE APPROXIMATE AND SUBJECT TO MINOR ADJUSTMENTS IN THE FIELD. WORK SHALL BE COORDINATED WITH ALL OTHER TRADES TO AVOID INTERFERENCE IN THE FIELD.
16. INSTALL EXPOSED PIPING AND DUCTWORK AS HIGH AS PRACTICAL IN ROOMS WITHOUT CEILINGS.
17. GENERAL CONTRACTOR IS RESPONSIBLE FOR TEMPORARY HEATING AND AIR CONDITIONING. THE BUILDING HVAC SYSTEMS SHALL NOT BE USED FOR TEMPORARY CONDITIONING AT ANY TIME DURING CONSTRUCTION.

## PLUMBING GENERAL NOTES

- A FIELD VERIFY ALL NEW WATER, WASTE, AND VENT PIPING CONNECTIONS AND PROVIDE NEW CONNECTIONS AS REQUIRED FOR PROPERLY OPERATING SYSTEMS.
- B PITCH UNDERFLOOR SANITARY WASTE PIPING AT 1/4" PER FOOT, UNLESS NOTED OTHERWISE.
- C PITCH UNDERFLOOR STORM PIPING 3" AND GREATER AT 1/8" PER FOOT, UNLESS NOTED OTHERWISE. PITCH ALL OTHER STORM PIPING AT 1/4" PER FOOT UNLESS OTHERWISE NOTED.
- D FIELD VERIFY LOCATION AND INVERTS OF SITE UTILITIES PRIOR TO INSTALLATION.
- E ROUTE DOMESTIC WATER, FIRE PROTECTION, SANITARY SEWER, AND STORM SEWER SERVICES TO SITE UTILITIES 5'-0" FROM BUILDING UNLESS NOTED OTHERWISE. REFER TO CIVIL PLANS.
- F WASTE AND VENT PIPING BELOW FLOOR AND THROUGH FLOOR SHALL BE 2" MINIMUM.
- G PROVIDE CLEANOUT IN ACCESSIBLE LOCATION AT THE BASE OF ALL PLUMBING RISERS.

* NOTE *

ALL OF GENERAL NOTES ON THIS SHEET ARE TO BE APPLIED TO ALL OTHER DRAWINGS IN THIS SET. THE SYMBOLS AND ABBREVIATIONS SHOWN ON THIS SHEET MAY OR MAY NOT BE USED IN THIS SET OF DRAWINGS.


STRICKLAND ENGINEERING
CIVIL MECHANICAL ELECTRICAL ENGINEERING
113 WEST MAIN STREET JACKSON, MISSOURI 63755
TEL: 573-243-4080 FAX: 573-243-2191




POINSETT COUNTY COURT ANNEX

# POINSETT COUNTY

Harrisburg, Arkansas


BRACKETT KRENNERICH architects
100 East Huntington Ave, Suite D P.O. Box 1655
870-932-0571 Fax 870-932-0975
www.bkarchts.com


| Revision Schedule | | | |
|---|---|---|---|
| Tag | Rev. Description | Rev. Date | Issued by |

STATE OF ARKANSAS
REGISTERED PROFESSIONAL ENGINEER
MARK DAVID STRICKLAND
07/26/2024
MARK D. STRICKLAND, P.E.
ENGINEER LICENSE NO. 11187

Commission Number 2237 (SE 23-232)

P100

July 26, 2024

PLUMBING TITLE SHEET

C:\Users\awright\Documents\MPE24_Poinsett
Central\awright@strickandengineering.com.rvt
8/2/2024 10:26:53 AM

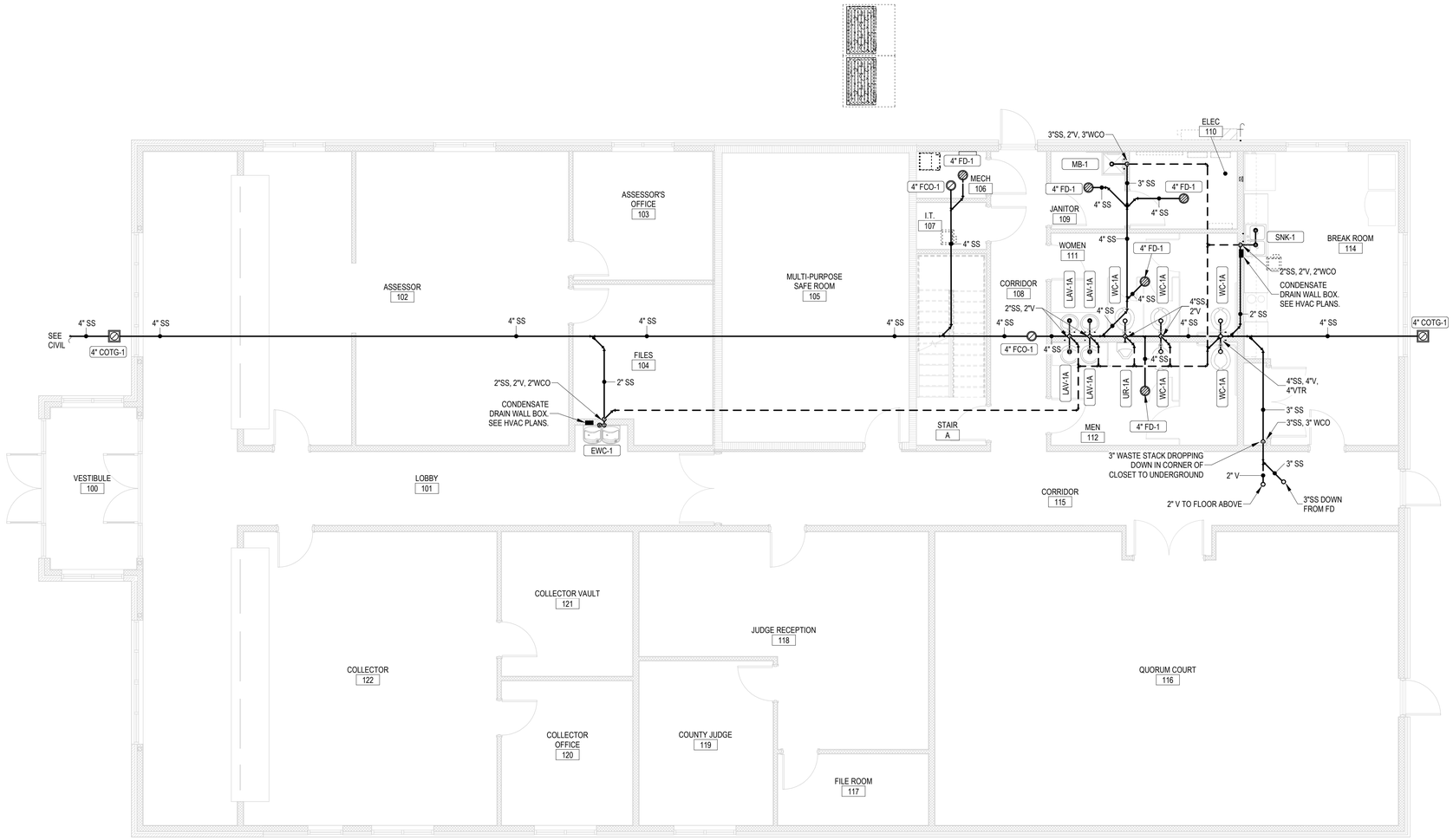


1 P101 FIRST FLOOR PLAN - WASTE & VENT PIPING
3/16" = 1'-0"

PROJECT NORTH

POINSETT COUNTY COURT ANNEX

# POINSETT COUNTY

Harrisburg, Arkansas

BRACKETT KRENNERICH architects

100 East Huntington Ave. Suite D P.O. Box 1655 870-932-0571 Fax 870-932-0975 www.bkarchts.com

Revision Schedule

| Tag | Rev. Description | Rev. Date | Issued by |
|---|---|---|---|

STATE OF ARKANSAS
REGISTERED PROFESSIONAL ENGINEER
MARK DEAN STRICKLAND

07/26/2024
MARK D. STRICKLAND, P.E.
ENGINEER LICENSE NO. 11187

Commission Number
2237 (SE 23-232)

P101

July 26, 2024

FIRST FLOOR WASTE & VENT PIPING PLAN

STRICKLAND ENGINEERING
CIVIL MECHANICAL ELECTRICAL ENGINEERING
113 West Main Street Jackson, Missouri 63755
Tel: 573-243-4080 Fax: 573-243-2191



C:\Users\owright\Documents\MPE24_Poinsett
Central_owright@strickandengineering.com.rvt
8/2/2024 10:26:56 AM

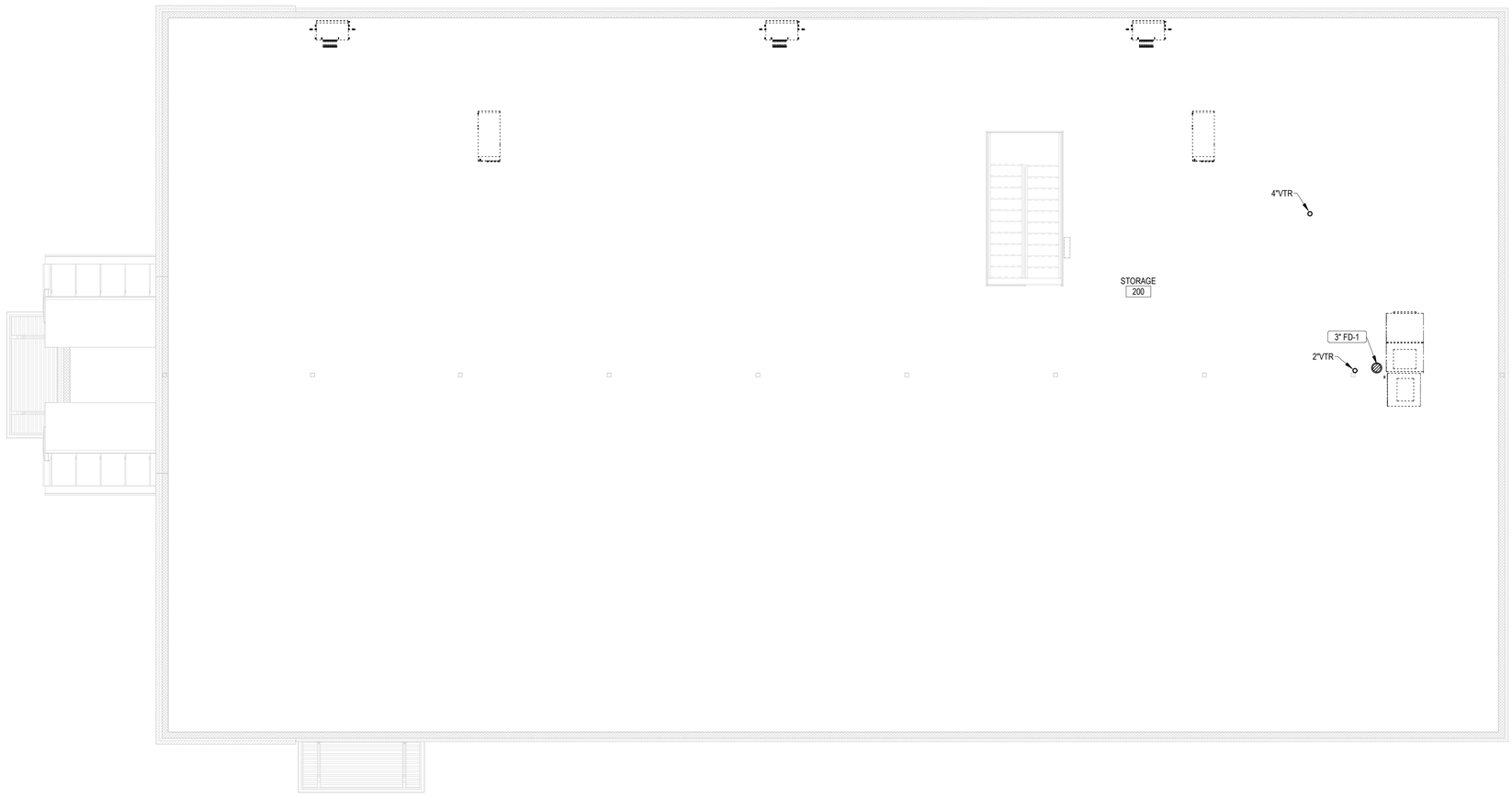


1
P102
SECOND FLOOR PLAN - WASTE & VENT PIPING
3/16" = 1'-0"

PROJECT NORTH

POINSETT COUNTY COURT ANNEX

# POINSETT COUNTY

Harrisburg, Arkansas

BRACKETT KRENNERICH architects

100 East Huntington Ave. Suite D P.O. Box 1655 870-932-0571 Fax 870-932-0975 www.bkarchts.com

| Revision Schedule | | | |
|---|---|---|---|
| Tag | Rev. Description | Rev. Date | Issued by |

STATE OF ARKANSAS
REGISTERED PROFESSIONAL ENGINEER
MARK D. STRICKLAND
07/26/2024
MARK D. STRICKLAND, P.E.
ENGINEER LICENSE NO. 11187

Commission Number
2237 (SE 23-232)

P102

July 26, 2024

STRICKLAND ENGINEERING
CIVIL MECHANICAL ELECTRICAL ENGINEERING
113 West Main Street Jackson, Missouri 63755
Tel: 573-243-4080 Fax: 573-243-2191



SECOND FLOOR WASTE & VENT PIPING PLAN

C:\Users\owright\Documents\MPE24_Poinsett
Autodesk Docs\://strickandengineering.com/M
8/2/2024 10:25:55 AM

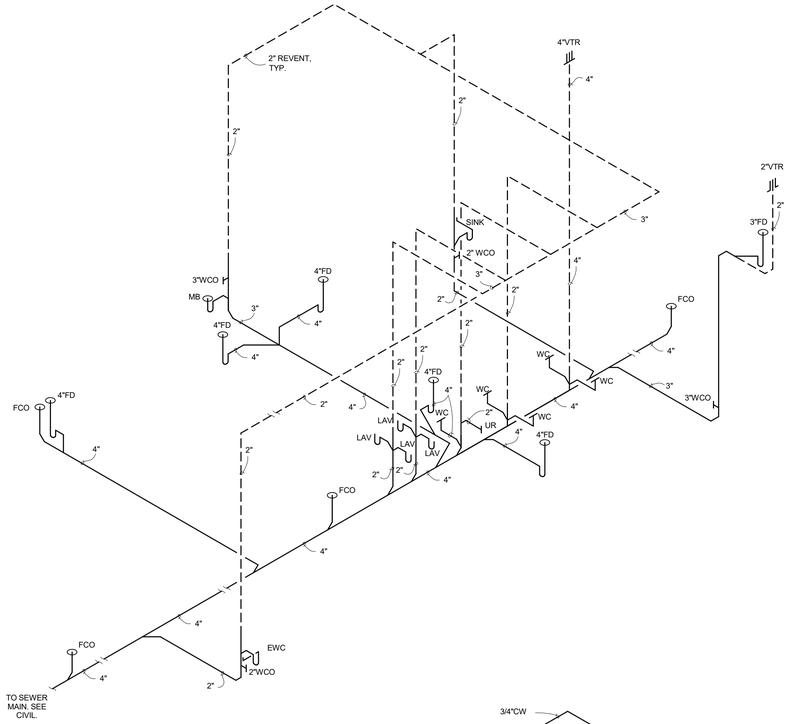


## WASTE & VENT PIPING RISER

NOT TO SCALE

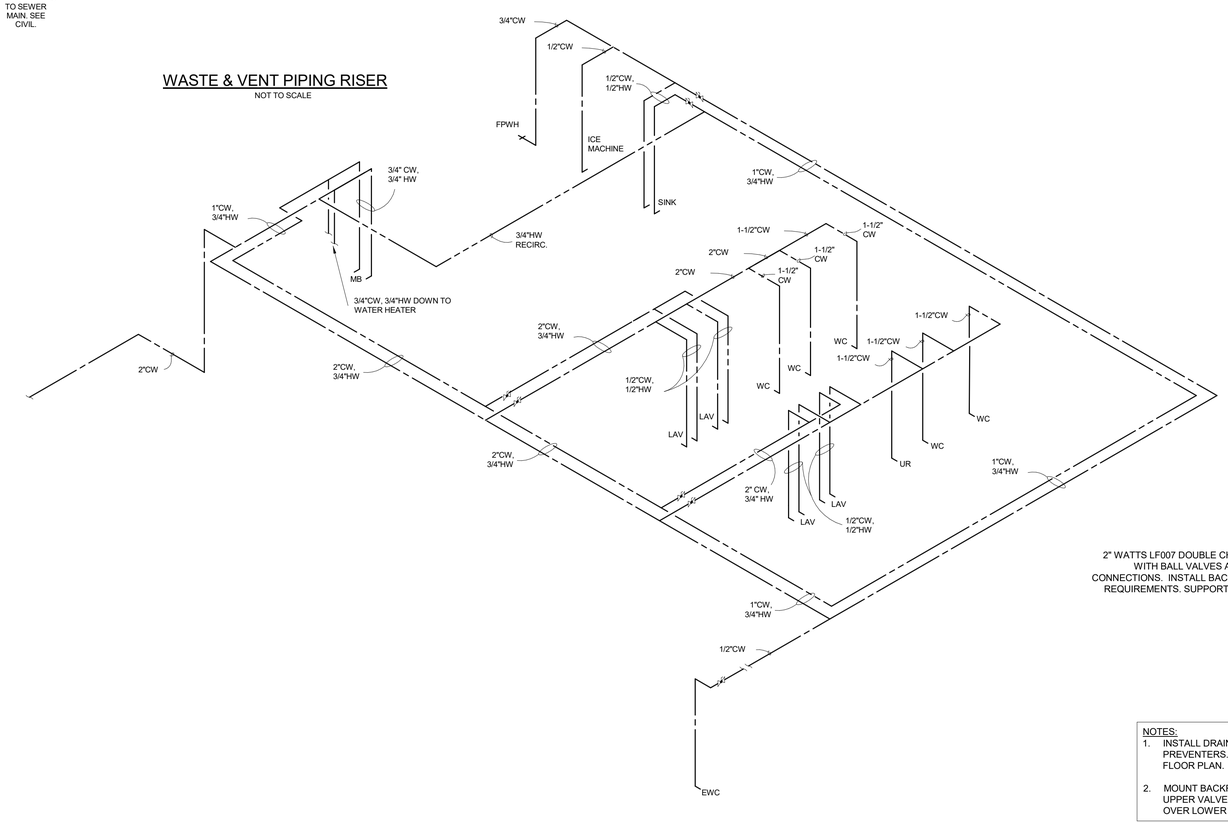


## SUPPLY PIPING RISER

SCALE

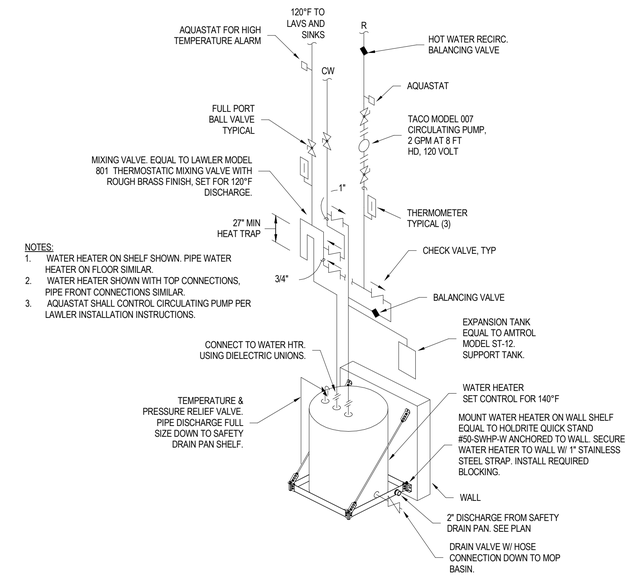


NOTES:
1. WATER HEATER ON SHELF SHOWN. PIPE WATER HEATER ON FLOOR SIMILAR.
2. WATER HEATER SHOWN WITH TOP CONNECTIONS, PIPE FRONT CONNECTIONS SIMILAR.
3. AQUASTAT SHALL CONTROL CIRCULATING PUMP PER LAWLER INSTALLATION INSTRUCTIONS.

## ELECTRIC WATER HEATER PIPING DIAGRAM

NOT TO SCALE

WATER HEATER DETAIL NOTES:
1. REFER TO DRAWINGS FOR PIPE SIZES.
2. REFER TO SHOP DRAWINGS FOR CONNECTIONS & CONNECTION SIZES TO EQUIPMENT.
3. ANCHOR WATER HEATER, EXPANSION TANK, AND ALL PIPING AS REQUIRED TO PREVENT SEISMIC

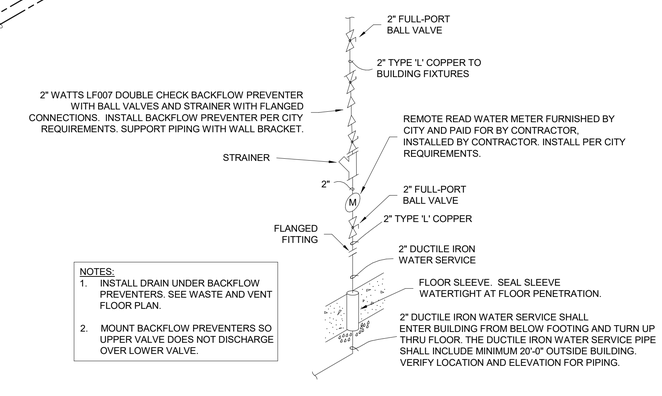


NOTES:
1. INSTALL DRAIN UNDER BACKFLOW PREVENTERS. SEE WASTE AND VENT FLOOR PLAN.
2. MOUNT BACKFLOW PREVENTERS SO UPPER VALVE DOES NOT DISCHARGE OVER LOWER VALVE.

## WATER SUPPLY PIPING RISER

NOT TO SCALE

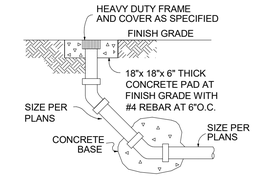


## GRADE CLEANOUT DETAIL

NOT TO SCALE

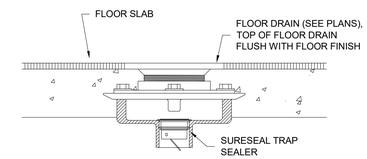


NOTE:
INSTALL PER MANUFACTURER'S RECOMMENDED INSTALLATION INSTRUCTIONS.

## FLOOR DRAIN TRAP SEALER DETAIL

NOT TO SCALE

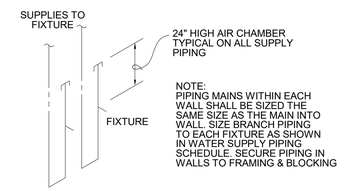


NOTE:
PIPING MAINS WITHIN EACH WALL SHALL BE SIZED THE SAME SIZE AS THE MAIN INTO WALL. SIZE BRANCH PIPING TO EACH FIXTURE AS SHOWN IN WATER SUPPLY PIPING SCHEDULE. SECURE PIPING IN WALLS TO FRAMING & BLOCKING

## TYPICAL WATER SUPPLY PIPING

NOT TO SCALE

### WATER SUPPLY PIPING SCHEDULE

| FIXTURE/EQUIPMENT | CW | HW |
|---|---|---|
| FLUSH VALVE WATER CLOSET | 1" | - |
| LAVATORY | 1/2" | 1/2" |
| SINK | 1/2" | 1/2" |
| ELECTRIC WATER COOLER | 1/2" | - |
| ICE MAKER SUPPLY | 1/2" | - |
| MOP BASIN | 1/2" | 1/2" |
| FREEZEPROOF HYDRANT | 3/4" | - |

NOTES:
1. SIZE BRANCH PIPING TO EACH FIXTURE AS SHOWN IN WATER SUPPLY PIPING SCHEDULE ABOVE.
2. INSTALL A BALL SHUTOFF VALVE IN EACH BRANCH PIPE FOR ALL PLUMBING FIXTURES AND EQUIPMENT.
3. SIZE PIPING TO OTHER FIXTURES AND EQUIPMENT AS SHOWN ON DRAWINGS AND SHOP DRAWINGS.
4. SIZE MAINS WITHIN WALL THE SAME AS THE MAIN INTO WALL.
5. SECURE PIPING IN WALLS TO FRAMING AND BLOCKING.


STRICKLAND ENGINEERING
CIVIL MECHANICAL ELECTRICAL ENGINEERING
113 WEST MAIN STREET JACKSON, MISSOURI 63755
TEL: 573-243-4080 FAX: 573-243-2191




POINSETT COUNTY COURT ANNEX

# POINSETT COUNTY

Harrisburg, Arkansas


BRACKETT KRENNERICH architects
100 East Huntington Ave. Suite D P.O. Box 1655
870-932-0571 Fax 870-932-0975
www.bkarchts.com


| Revision Schedule | | | |
|---|---|---|---|
| Tag | Rev. Description | Rev. Date | Issued by |

STATE OF ARKANSAS
REGISTERED PROFESSIONAL ENGINEER
MARK D. STRICKLAND
07/26/2024
MARK D. STRICKLAND, P.E.
ENGINEER LICENSE NO. 11187

Commission Number 2237 (SE 23-232)

P103

July 26, 2024

PLUMBING DETAILS

C:\Users\owright\Documents\MPE24_Poinsett
Central_owright@strickandengineering.com.rvt
8/2/2024 10:27:00 AM

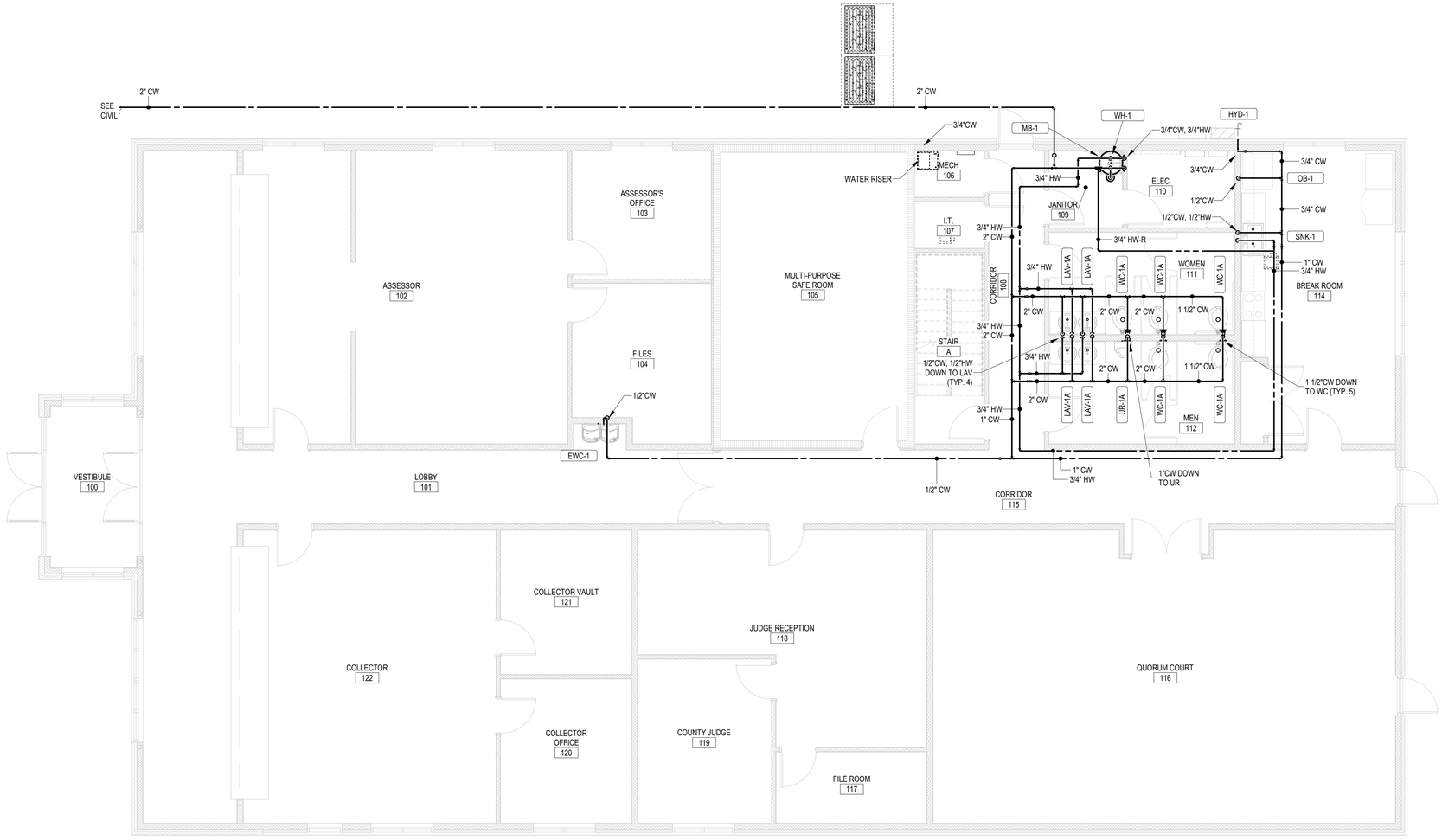


1 P201 FIRST FLOOR PLAN - SUPPLY PIPING
3/16" = 1'-0"

PROJECT NORTH

POINSETT COUNTY COURT ANNEX

# POINSETT COUNTY

Harrisburg, Arkansas

BRACKETT KRENNERICH architects
100 East Huntington Ave. Suite D P.O. Box 1655
870-932-0571 Fax 870-932-0975
www.bkarchts.com

| Revision Schedule | | | |
|---|---|---|---|
| Tag | Rev. Description | Rev. Date | Issued by |

STATE OF ARKANSAS
REGISTERED PROFESSIONAL ENGINEER
MARK D. STRICKLAND
07/26/2024
MARK D. STRICKLAND, P.E.
ENGINEER LICENSE NO. 11187

Commission Number 2237 (SE 23-232)

P201

July 26, 2024

FIRST FLOOR SUPPLY PIPING PLAN

STRICKLAND ENGINEERING
CIVIL MECHANICAL ELECTRICAL ENGINEERING
113 West Main Street Jackson, Missouri 63755
Tel: 573-243-4080 Fax: 573-243-2191



C:\Users\cwright\Documents\MPE24_Poinsett
Autodesk Docs\://strickandengineering.com/M
8/2/2024 10:27:03 AM

NOTES:

1. SPRINKLER CONTRACTOR SHALL COORDINATE SPRINKLER HEAD LOCATIONS AND ROUTING OF PIPING WITH FRAMING, MECHANICAL, AND ELECTRICAL WORK.
2. RISER SHALL BE COMPLETE WITH ALL REQUIRED VALVES, GAUGES, FITTINGS, PIPING, ETC. FOR THE WET PIPE SYSTEMS.
3. VERIFY THE LAYOUT OF THE RISER SYSTEM IN THE SPRINKLER ROOM. CONFIRM TO THE OWNER AT THE TIME OF SUBMITTING A BID FOR THE SPRINKLER WORK THAT THE ROOM IS SUFFICIENT TO INSTALL THE PROPOSED SPRINKLER SYSTEM.
4. SPRINKLER CONTRACTOR SHALL SUBMIT SHOP DRAWINGS FOR APPROVAL PRIOR TO INSTALLATION OF THE SYSTEM.
5. SHOP DRAWINGS SHALL INCLUDE A STRUCTURAL CROSS SECTION OF BUILDING SHOWING THE CLEARANCES OF THE PIPING. A TAMPER SWITCH SHALL ALSO BE SHOWN ON THE SHOP DRAWINGS.
6. SPRINKLER HEADS SHALL NOT BE INSTALLED CLOSER THAN 24" TO ANY SURFACE MOUNTED LIGHT FIXTURES, AIR DEVICES, OR ANY OTHER CEILING SURFACE MOUNTED ITEM.
7. ELECTRONIC SUBMITTALS WILL ONLY BE ACCEPTED AT SUBMITTALS@STRICKLANDENGINEERING.COM

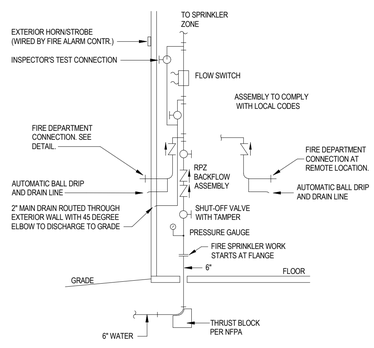


FIRE PROTECTION RISER ASSEMBLY DETAIL

NOT TO SCALE

## GENERAL MECHANICAL SYMBOLS

- REVISION NUMBER - SHOWN ON PLANS
- POINT WHERE NEW CONNECTS TO EXISTING
- NUMBER OF DETAIL ON SHEET
- NUMBER OF SHEET WHERE DETAIL APPEARS
- KEYNOTE
- CONTINUATION SYMBOL
- Room 6 — ROOM NAME AND NUMBER
- ITEM TO BE DEMOLISHED
- AREA NOT IN CONTRACT
- 2" — PIPE SIZE TAG (DIAMETER)
- ABOVE GROUND PIPING
- 1/8" / 12" SLOPE — PIPE SLOPE TAG
- BELOW GROUND PIPING
- INVERT: -105' - 1" — PIPE INVERT ELEVATION TAG
- (E) — EXISTING PIPE TAG
- PIPING BEING DEMOLISHED

## ABBREVIATIONS

| | | | |
|---|---|---|---|
| Ø | ROUND | LVR | LOUVER |
| ABV | ABOVE | LWT | LEAVING WATER TEMPERATURE |
| AC | AIR CONDITIONING | M/A | MIXED AIR |
| AD | AREA DRAIN | MAX | MAXIMUM |
| ADD | ADDENDUM | MBH | ONE THOUSAND BTU PER HOUR |
| AFF | ABOVE FINISHED FLOOR | MCF | ONE THOUSAND CUBIC FEET |
| AFUE | ANNUAL FUEL UTILIZATION EFFICIENCY | MD | MOTORIZED DAMPER |
| ALT | ALTERNATE | MECH | MECHANICAL |
| AP | ACCESS PANEL | MFR | MANUFACTURER |
| ARCH | ARCHITECT/ARCHITECTURAL | MIN | MINIMUM |
| BFF | BELOW FINISHED FLOOR | MISC | MISCELLANEOUS |
| BLW | BELOW | MTR | MOTOR |
| BTU | BRITISH THERMAL UNITS | MU/A | MAKE-UP/AIR |
| BTUH | BRITISH THERMAL UNITS PER HOUR | NC | NOISE CRITERIA |
| CAP | CAPACITY | NC | NORMALLY CLOSED |
| CB | CATCH BASIN | NIC | NOT IN CONTRACT |
| CFM | CUBIC FEET PER MINUTE | NO | NUMBER |
| CLG | CEILING | NO | NORMALLY OPEN |
| CO | CLEAN OUT | NTS | NOT TO SCALE |
| CW | COLD WATER | O | OXYGEN |
| D | DEGREE | O/A | OUTSIDE AIR |
| DB | DRY BULB | ORD | OVERFLOW ROOF DRAIN |
| DIA | DIAMETER | PD | PRESSURE DROP |
| DN | DOWN | P/V | POST INDICATOR VALVE |
| DW | DISTILLED WATER | PLBG | PLUMBING |
| EA | EACH | PRESS | PRESSURE |
| EAT | ENTERING AIR TEMPERATURE | PRV | PRESSURE REDUCING VALVE |
| ELEC | ELECTRICAL | PSI | POUNDS PER SQUARE INCH |
| EQUIP | EQUIPMENT | PSIG | POUNDS PER SQUARE INCH GAUGE |
| EWC | ELECTRIC WATER COOLER | PWR | POWER |
| EWT | ENTERING WATER TEMPERATURE | R | DUCT RISER |
| E/A | EXHAUST AIR | R/A | RETURN AIR |
| EXIST | EXISTING | RCP | RADIANT CEILING PANEL |
| F | DEGREES FAHRENHEIT | RD | ROOF DRAIN |
| FCO | FLOOR CLEAN OUT | REC | RECESSED |
| FD | FLOOR DRAIN | RED | REDUCER |
| FD | FIRE DAMPER | RH | RELATIVE HUMIDITY |
| FDV | FIRE DEPARTMENT VALVE | RL/A | RELIEF AIR |
| FL | FLOOR | RM | ROOM |
| FO | FUEL OIL | RPM | REVOLUTIONS PER MINUTE |
| FOV | FUEL OIL VENT | RW | RAIN WATER |
| FOR | FUEL OIL RETURN | SF | SQUARE FOOT |
| FOS | FUEL OIL SUPPLY | S/A | SUPPLY AIR |
| FPM | FEET PER MINUTE | SAN | SANITARY |
| FS | FLOOR SINK | SF | SQUARE FOOT |
| FT | FOOT/FEET | SD | SMOKE DAMPER |
| FTR | FIN TUBE RADIATION | SM | SURFACE MOUNT |
| GAL | GALLON | SP | STANDPIPE |
| GC | GENERAL CONTRACTOR | SP | STATIC PRESSURE |
| GPM | GALLONS PER MINUTE | STM | STEAM |
| GW | GREASE WASTE | T | THERMOSTAT |
| HB | HOSE BIB | TD | TEMPERATURE DROP |
| HP | HORSE POWER | TDR | TRENCH DRAIN |
| HTG | HEATING | TEMP | TEMPERATURE |
| HTR | HEATER | TYP | TYPICAL |
| HW | HOT WATER | UG | UNDERGROUND |
| HYD | HYDRANT | VAC | VACUUM |
| ID | INDIRECT | V | VENT |
| IN | INCH | VAV | VARIABLE AIR VOLUME |
| INV | INVERT | VENT | VENTILATION |
| LB | POUND | VTR | VENT THROUGH ROOF |
| LB/HR | POUNDS PER HOUR | W | WASTE |
| LAT | LEAVING AIR TEMPERATURE | WB | WET BULB |
| LP | LOW PRESSURE | WCO | WALL CLEAN OUT |
| LPG | LIQUEFIED PETROLEUM GAS | WH | WALL HYDRANT |

## EQUIPMENT ABBREVIATIONS

| | | | |
|---|---|---|---|
| AC | AIR CONDITIONING UNIT | ET | EXPANSION TANK |
| ACCU | AIR COOLING CONDENSING UNIT | EWH | ELECTRIC WATER HEATER |
| AHU | AIR HANDLING UNIT | FCU | FAN COIL UNIT |
| AS | AIR SEPARATOR | FP | FIRE PUMP |
| B | BOILER | GI | GREASE INTERCEPTOR |
| CH | CHILLER | GRV | GRAVITY ROOF VENTILATOR |
| CT | COOLING TOWER | HWP | HEATING WATER PUMP |
| CUH | CABINET UNIT HEATER | HRU | HEAT RECOVERY UNIT |
| CHWP | CHILLED WATER PUMP | PRV | POWER ROOF VENTILATOR |
| DBP | DOMESTIC WATER BOOSTER PUMP | RE | RETURN/EXHAUST FAN |
| DC | DUCT MOUNTED COIL | RTU | ROOFTOP UNIT |
| DCP | DOMESTIC WATER CIRCULATING PUMP | SP | SUMP PUMP |
| EF | EXHAUST FAN | UH | UNIT HEATER |
| EDC | ELECTRIC DUCT COIL | WH | WATER HEATER |

## FIRE PROTECTION SYMBOLS

- FP-D — FIRE PROTECTION DRY
- FP-O — FIRE PROTECTION OTHER
- FP-PA — FIRE PROTECTION PRE-ACTION
- FP-W — FIRE PROTECTION WET
- FP-DOM-W — COMBINATION FIRE & DOMESTIC
- UPRIGHT SPRINKLER HEAD
- PENDENT SPRINKLER HEAD
- RECESSED SPRINKLER HEAD
- CONCEALED SPRINKLER HEAD
- SIDEWALL SPRINKLER HEAD
- D — DRY SPRINKLER HEAD
- PATENTED COVERAGE SIDEWALL SPRINKLER HEAD
- 48"x18" S/A — OBSTRUCTION FROM DUCTWORK 48" AND GREATER
- PIPE DROP
- PIPE RISE
- PIPE TEE
- CAP
- 4" — PLUG
- 2" — REDUCING 45 DEGREE TEE
- 4" — 45 DEGREE TEE

**PIPE ACCESSORY TAGS**

- 2" DOM. WM — DOMESTIC WATER METER
- 2" BALANCING — BALANCING VALVE
- 2" SHUTOFF — 1/4 TURN BALL VALVE
- 2" CHECK — CHECK VALVE
- 2" TMV — 3-WAY MIXING VALVE
- 2" M-CNTRL — MOTORIZED CONTROL VALVE
- 2" 3-WAY CNTRL — 3 WAY MOTORIZED CONTROL VALVE
- 2" PRV — PRESSURE REDUCING VALVE
- 3/8" SOLENOID — REFRIGERANT SOLENOID VALVE
- 2" BUTTERFLY — BUTTERFLY VALVE

## PROJECT GENERAL NOTES

1. COORDINATE INSTALLATION OF PIPING, DUCTWORK, CONDUIT, LIGHTS, CABLE TRAY, STRUCTURE, AND EQUIPMENT TO PREVENT CONFLICTS.
2. THE CONTRACTOR SHALL BE FAMILIAR WITH ALL THE CONDITIONS BOTH EXISTING AND THOSE ILLUSTRATED BY THESE DOCUMENTS AS WELL AS THOSE WHICH CAN BE REASONABLY ANTICIPATED INCLUDING, BUT NOT LIMITED TO ARCHITECTURAL, ELECTRICAL, VENTILATION, PLUMBING, AND OTHER SYSTEMS INVOLVED ON THIS PROJECT.
3. PRIOR TO CONSTRUCTING OPENINGS THRU ROOF, WALLS OR FLOORS, COORDINATE WITH GENERAL CONTRACTOR AND ALL OTHER TRADES. COORDINATE WITH GENERAL CONTRACTOR TO PATCH AND/OR REPAIR OPENINGS. DO NOT CUT EXISTING STRUCTURAL ELEMENTS.
4. FINAL PRODUCT SHALL BE A COMPLETE AND FUNCTIONING SYSTEM, AND SHALL CONFORM TO ALL REQUIREMENTS OF APPLICABLE FEDERAL, STATE, AND LOCAL CODES, INCLUDING BUT NOT LIMITED TO THE INTERNATIONAL BUILDING CODE AND INTERNATIONAL MECHANICAL CODE.
5. LOCATE EQUIPMENT REQUIRING ACCESS 2'-0" MAXIMUM ABOVE CEILING.
6. ALL ROOF MOUNTED EQUIPMENT SHALL BE A MINIMUM 10'-0" FROM EDGE OF ROOF.
7. LOCATE DUCTWORK, PIPING AND MECHANICAL EQUIPMENT AWAY FROM THE SPACE ABOVE ELECTRICAL PANELS. TRANSFORMERS AND OTHER ELECTRICAL EQUIPMENT.
8. FIRE SEAL AROUND DUCT AND PIPING PENETRATIONS OF FIRE RATED WALLS. REFER TO SPECIFICATION.
9. PROVIDE SLEEVES AND/OR OPENINGS TO RUN PIPES AND DUCTS THROUGH FOUNDATIONS, FLOORS, WALLS, AND ROOF.
10. ADJUST PIPING AND DUCTWORK SIZES TO PROPERLY CONNECT TO MECHANICAL EQUIPMENT.
11. REFER TO PLUMBING SERIES DRAWINGS FOR GAS PIPING.
12. PIPE SIZES SHOWN SHALL BE CONTINUED IN THE DIRECTION OF FLOW UNTIL ANOTHER SIZE IS SHOWN.
13. FOR DETAILS, EQUIPMENT CONNECTIONS, AND PIPE SIZES NOT SHOWN ON THE SEGMENTS, REFER TO DETAILS, SCHEDULES, AND SPECIFICATIONS.
14. INSTALL ALL EQUIPMENT IN ACCORDANCE WITH THE RESPECTIVE MANUFACTURER'S WRITTEN INSTALLATION INSTRUCTIONS, AT A LEVEL OF QUALITY AND WORKMANSHIP CONSISTENT WITH THE SPECIFICATIONS.
15. LOCATIONS OF PIPING, DUCTWORK AND EQUIPMENT AS INDICATED ON THE DRAWING, ARE APPROXIMATE AND SUBJECT TO MINOR ADJUSTMENTS IN THE FIELD. WORK SHALL BE COORDINATED WITH ALL OTHER TRADES TO AVOID INTERFERENCE IN THE FIELD.
16. INSTALL EXPOSED PIPING AND DUCTWORK AS HIGH AS PRACTICAL IN ROOMS WITHOUT CEILINGS.
17. GENERAL CONTRACTOR IS RESPONSIBLE FOR TEMPORARY HEATING AND AIR CONDITIONING. THE BUILDING HVAC SYSTEMS SHALL NOT BE USED FOR TEMPORARY CONDITIONING AT ANY TIME DURING CONSTRUCTION.

## FIRE PROTECTION GENERAL NOTES

A PROVIDE A COMPLETE WET TYPE FIRE PROTECTION SYSTEM AS REQUIRED TO ACCOMMODATE THE FLOOR PLAN AND CEILING TYPES INCLUDING MAINS, BRANCHES, HEADS, VALVES, AND ACCESSORIES AS REQUIRED. THE SYSTEM SHALL BE INSTALLED ACCORDING TO MANUFACTURER'S SPECIFICATIONS AND RECOMMENDATIONS OF THE STATE BUILDING CODE, LOCAL FIRE DEPARTMENT, AND ALL FEDERAL, STATE, AND LOCAL AUTHORITIES, NFPA, AND FACTORY MUTUAL.

B THE SPRINKLER SYSTEM SHALL BE DESIGNED BASED UPON ACTUAL WATER FLOW TEST DATA OBTAINED AT OR NEAR THE JOB SITE.

C REFER TO REFLECTED CEILING PLANS FOR ADDITIONAL INFORMATION REGARDING SPRINKLER HEAD LOCATION AND PIPE, UNLESS NOTED OTHERWISE.

D DIVISION 21 CONTRACTOR SHALL COORDINATE WITH THE ELECTRICAL CONTRACTOR FOR PROPER INSTALLATION OF THE FIRE PROTECTION SYSTEMS ALARM DEVICES INVOLVED WITH FIRE SPRINKLER SYSTEM.

E ALL SPRINKLER SYSTEM PIPING SHALL BE CONCEALED ABOVE THE SUSPENDED CEILING SYSTEM, UNLESS NOTED OTHERWISE. WRITTEN AUTHORIZATION SHALL BE OBTAINED FROM THE ARCHITECT PRIOR TO EXPOSING ANY PIPING IN ANY ROOM WHICH HAS A SUSPENDED CEILING.

F THIS CONTRACTOR SHALL PROVIDE ALL ADDITIONAL SPRINKLER HEADS AS REQUIRED TO ENSURE AN APPROVED FIRE PROTECTION SYSTEM AT NO ADDITIONAL COST TO THE OWNER.

G AUXILIARY DRAINS SHALL BE EXPOSED WITH 1" DRAIN VALVES. WHEN 5 OR MORE GALLONS ARE TRAPPED, THIS CONTRACTOR SHALL PROVIDE FIXED PIPING TO AN ADEQUATELY SIZED RECEPTOR WHICH IS CAPABLE OF ACCEPTING THE FULL FLOW OF THE DRAIN. WHEN LESS THAN 5 GALLONS ARE TRAPPED, A HOSE BIB SHALL BE PROVIDED AT THE DRAIN VALVE.

H AUXILIARY DRAINS SHALL NOT BE LOCATED ABOVE PLASTER OR GYPSUM BOARD CEILING SYSTEMS. ONLY BY A SPECIFIC WRITTEN INSTRUCTION FROM THE ENGINEER WILL A VARIANCE BE PROVIDED.

I AN INSPECTOR'S TEST CONNECTION SHALL BE PROVIDED FOR EACH FIRE SPRINKLER ZONE. THIS CONTRACTOR SHALL PROVIDE FIXED PIPING FROM THE TEST CONNECTION TO AN ADEQUATELY SIZED RECEPTOR WHICH IS CAPABLE OF ACCEPTING THE FULL FLOW OF THE TEST. EXTERIOR DISCHARGE OF THE TEST CONNECTION SHALL BE PERMITTED ONLY BY SPECIFIC WRITTEN INSTRUCTION FROM THE ENGINEER.

J SHOW ALL ROOM NUMBERS ON SHOP DRAWING PLANS.

K THE CONTRACTOR SHALL PERFORM A FIRE FLOW TEST IN ACCORDANCE WITH NFPA 291 TO VERIFY THE FLOW. A FIRE PROTECTION ENGINEER OR AN ENGINEER EXPERIENCED IN WATER FLOW TESTING SHALL PERFORM OR WITNESS THE REQUIRED FLOW TESTING AND SIGN THE REPORT PRIOR TO THE FIRST SPRINKLER SYSTEM SUBMITTAL.

L ROUTE SPRINKLER PIPING SUCH THAT IT DOES NOT RUN ABOVE ELECTRICAL PANELS, SWITCHGEAR, OR SIMILAR EQUIPMENT. SPRINKLER MAINS SHALL NOT RUN THROUGH ELECTRICAL OR COMMUNICATION ROOMS. SPRINKLER HEADS IN THESE ROOMS SHALL BE SERVED BY A DEDICATED BRANCH LINE FOR EACH ROOM.

M THIS DRAWING INDICATES A GENERAL PIPING ARRANGEMENT AND SUGGESTED SIZING ONLY. THIS CONTRACTOR SHALL DETERMINE THE ACTUAL PIPE SIZING REQUIRED AND COORDINATE WORK WITH ALL OTHER TRADES TO AVOID CONFLICTS.

N THIS CONTRACTOR SHALL PREPARE HYDRAULIC CALCULATIONS BASED UPON THE CONFIGURATION OF THE ACTUAL SYSTEM DESIGN AS SHOWN ON THIS CONTRACTOR'S SHOP DRAWINGS.

* NOTE *
ALL OF GENERAL NOTES ON THIS SHEET ARE TO BE APPLIED TO ALL OTHER DRAWINGS IN THIS SET.THE SYMBOLS AND ABBREVIATIONS SHOWN ON THIS SHEET MAY OR MAY NOT BE USED IN THIS SET OF DRAWINGS.


STRICKLAND ENGINEERING
CIVIL MECHANICAL ELECTRICAL ENGINEERING
113 WEST MAIN STREET JACKSON, MISSOURI 63755
TEL: 573-243-4080 FAX: 573-243-2191



POINSETT COUNTY COURT ANNEX

# POINSETT COUNTY

Harrisburg, Arkansas


BRACKETT KRENNERICH architects
100 East Huntington Ave. Suite D P.O. Box 1655
870-932-0571 Fax 870-932-0975
www.bkarchts.com


Revision Schedule

| Tag | Rev. Description | Rev. Date | Issued by |
|---|---|---|---|
| | | | |

STATE OF ARKANSAS
REGISTERED PROFESSIONAL ENGINEER
MARK D. STRICKLAND
07/26/2024
MARK D. STRICKLAND, P.E.
ENGINEER LICENSE NO. 11187

Commission Number 2237 (SE 23-232)

FP100

July 26, 2024

FIRE PROTECTION TITLE SHEET

C:\Users\jwright\Documents\MPE24_Poinsett
Autodesk\strickandengineering.com.rvt
8/2/2024 10:26:41 AM


1 FP101 FIRST FLOOR - FIRE PROTECTION PLAN
3/16" = 1'-0"

POINSETT COUNTY COURT ANNEX

# POINSETT COUNTY

Harrisburg, Arkansas

BRACKETT KRENNERICH architects

100 East Huntington Ave. Suite D P.O. Box 1655 870-932-0571 Fax 870-932-0975 www.bkarchts.com

Revision Schedule

| Tag | Rev. Description | Rev. Date | Issued by |
|---|---|---|---|
| | | | |

STATE OF ARKANSAS
REGISTERED PROFESSIONAL ENGINEER
MARK D. STRICKLAND
11187
07/26/2024
MARK D. STRICKLAND, P.E.
ENGINEER LICENSE NO. 11187

STRICKLAND ENGINEERING
CIVIL MECHANICAL ELECTRICAL ENGINEERING
113 WEST MAIN STREET JACKSON, MISSOURI 63755
TEL: 573-243-4080 FAX: 573-243-2191



Commission Number
2237 (SE 23-232)

FP101

July 26, 2024

FIRST FLOOR FIRE PROTECTION

C:\Users\jwright\Documents\MPE24_Poinsett
Autodesk\strickandengineering.com.rvt
8/2/2024 10:26:43 AM

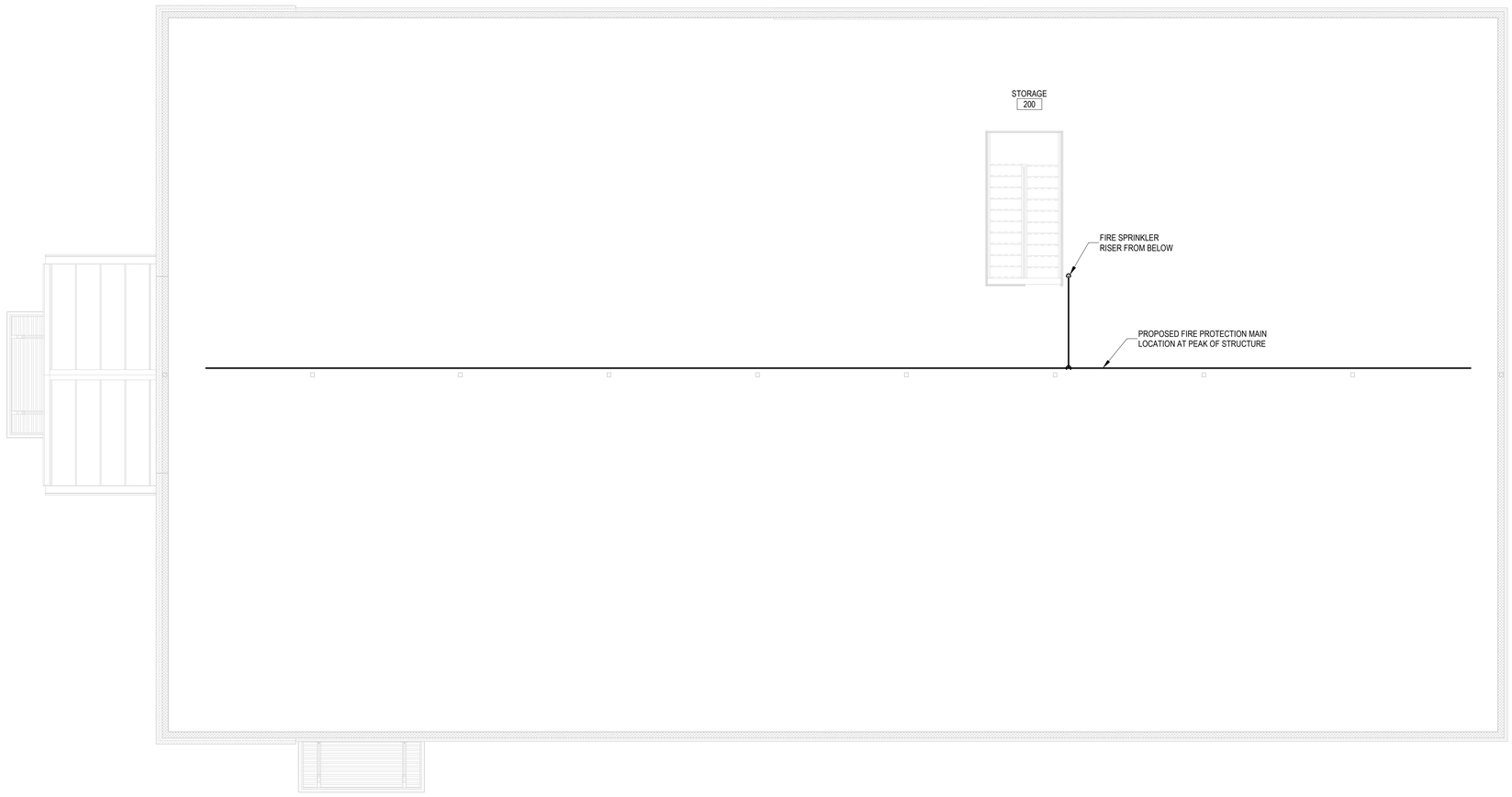


1 / FP102 SECOND FLOOR - FIRE PROTECTION PLAN
3/16" = 1'-0"

# POINSETT COUNTY COURT ANNEX
# POINSETT COUNTY
## Harrisburg, Arkansas

BRACKETT KRENNERICH architects
100 East Huntington Ave. Suite D P.O. Box 1655
870-932-0571 Fax 870-932-0975
www.bkarchts.com

| Revision Schedule | | | |
|---|---|---|---|
| Tag | Rev. Description | Rev. Date | Issued by |

STATE OF ARKANSAS
REGISTERED PROFESSIONAL ENGINEER
MARK D. STRICKLAND
07/26/2024
MARK D. STRICKLAND, P.E.
ENGINEER LICENSE NO. 11187

Commission Number
2237 (SE 23-232)

FP102

July 26, 2024

SECOND FLOOR FIRE PROTECTION

STRICKLAND ENGINEERING
CIVIL MECHANICAL ELECTRICAL ENGINEERING
113 West Main Street Jackson, Missouri 63755
Tel: 573-243-4080 Fax: 573-243-2191


C:\Users\owright\Documents\MPE24_Poinsett
Revit central: cloud\stricklandengineering.com.rvt
8/2/2024 10:26:45 AM

## ELECTRICAL SYMBOL LEGEND

| SYMBOL | DESCRIPTION |
|---|---|
| | 2' X 4' RECESSED LIGHT |
| | LINEAR SEMIRECESSED LIGHT |
| | LINEAR PENDANT LIGHT |
| | 2' X 2' RECESSED LIGHT |
| | (DESIGNATES (EM) LIFE SAFETY BRANCH) |
| | (DESIGNATES (EM) CRITICAL BRANCH) |
| | HIGH BAY LIGHT |
| | STRIP LIGHT |
| | ROUND RECESSED LIGHT |
| | ROUND RECESSED LIGHT (WALL WASH) |
| | ROUND SURFACE LIGHT |
| | ROUND PENDANT LIGHT |
| | CEILING EXIT LIGHT |

| MOUNTING HEIGHT | SYMBOL | DESCRIPTION |
|---|---|---|
| 90" | | EXIT SIGN |
| | | (DESIGNATES # OF HEADS) |
| 84" | | EMERGENCY BATTERY LIGHT |
| 84" | | EMERGENCY LIGHT (DOUBLE REMOTE HEADS) |
| 84" | | EMERGENCY LIGHT (SINGLE REMOTE HEAD) |
| 48" | S | SINGLE POLE SWITCH |
| 48" | 2 | 2 POLE SINGLE THROW SWITCH |
| 48" | 3 | 3-WAY SWITCH |
| 48" | 4 | 4-WAY SWITCH |
| 48" | K | KEYED SWITCH |
| 48" | | SWITCH W/PILOT |
| 48" | D | DIMMER SWITCH |
| 48" | OS | OCCUPANCY SENSOR SWITCH |
| 48" | MC | MOMENTARY CONTACT SWITCH |
| 48" | T | TIMER SWITCH |
| 48" | TD | TIME DELAY SWITCH |
| 48" | TC | TIME CONTROL SWITCH |
| | PC | PHOTOCELL |
| | P | POWER POLE (OPEN OFFICE STYLE) |
| | | SURGERY SERVICE COLUMN |
| | | STATIC GROUND RECEPTACLE |
| | | LIGHTNING PROTECTION AIR TERMINAL |
| | | LIGHTNING PROTECTION COND. SPLICE |
| | | GROUND ROD |
| | P | UTILITY SERVICE POWER POLE |

| MOUNTING HEIGHT | SYMBOL | DESCRIPTION |
|---|---|---|
| 18" | | SINGLE RECEPT. |
| 18" | | DUPLEX RECEPT. |
| | 48" | (DESIGNATES SPECIFIC MOUNTING HEIGHT) DUPLEX RECEPT. |
| 18" | GFI | GFI DUPLEX RECEPT. (FEED THROUGH TYPE) |
| 18" | GFI WP | GFI WEATHERPROOF RECEPT. |
| 18" | | SPLIT DUPLEX RECEPT. |
| 18" | | DUPLEX ISOLATED GROUND RECEPT. |
| 18" | | DUPLEX RECEPT. ON EMERG. CIRCUIT |
| | | FLOOR DUPLEX RECEPT. |
| | CLNG | CEILING DUPLEX RECEPT. |
| 18" | | FOURPLEX RECEPT. |
| 18" | | FOURPLEX RECEPT. ON EMERG. CIRCUIT |
| 18" | | 208V RECEPTACLE |
| | | RECEPT. ON CORD REEL |
| 18" | | SPECIAL RECEPT. |
| 18" | J | JUNCTION BOX |
| | J | FLOOR JUNCTION BOX |
| | J CLNG | CEILING JUNCTION BOX |
| | PS - D2 | MULTIOUTLET ASSEMBLY |
| | XX-1 / XX-1 | MOTOR / IDENTITY (SEE SCHEDULE) |
| | XX-1 | EXISTING TO REMAIN (E)XX-1 |
| | XX-1 | RELOCATED (R)XX-1 |
| | XX-1 | DEMOLISHED (E)XX-1 |
| | | COMB. MOTOR STARTER (FUSED) |
| | | SAFETY DISC. SW. (NON-FUSED) |
| | | SAFETY DISC. SW. (FUSED) |
| | R | RELAY |
| | | PUSH BUTTON |
| 60" | T | THERMOSTAT |
| 60" | H | HUMIDISTAT |
| | T1 | TRANSFORMER |
| | | BUS DUCT W/ PLUG IN DISCONNECT CABLE TAP BOX |

| MOUNTING HEIGHT | SYMBOL | DESCRIPTION |
|---|---|---|
| 18" | | TELEPHONE OUTLET |
| | | FLOOR TELEPHONE OUTLET |
| 18" | 1V2D | VOICE/DATA OUTLET |
| | | # OF VOICE AND # OF DATA OUTLETS. FOR EXAMPLE 1V2D = 1 VOICE, 2 DATA |
| | | FLOOR DATA OUTLET |
| | CLNG | CEILING DATA OUTLET |
| 18" | M | MICROPHONE OUTLET |
| 18" | | CATV OUTLET |
| 84" | TV | TV OUTLET |
| 84" | | WALL SPEAKER |
| | S | CEILING SPEAKER |
| 90" | | HORN TYPE SPEAKER |
| 48" | V | VOLUME CONTROL |
| 84" | | CLOCK |
| 48" | F P | FIRE ALARM PULL STATION |
| 90" | F | FIRE ALARM HORN W/STROBE (CANDELAS) |
| 90" | F | FIRE ALARM BELL |
| 90" | F | FIRE ALARM BELL W/STROBE (CANDELAS) |
| 90" | F | FIRE ALARM CHIME W/STROBE (CANDELAS) |
| 78" | DH | FIRE ALARM DOOR HOLDER |
| 78" | | FIRE ALARM DOOR CLOSER |
| 60" | FR | FIRE ALARM SHUT DOWN RELAY |
| | | THERMAL DETECTOR |
| | S | DUCT SMOKE DETECTOR |
| | | CEILING SMOKE DETECTOR |
| | | SPRINKLER FLOW SWITCH |
| | CAC | SPRINKLER VALVE TAMPER SWITCH |
| | | SPRINKLER LEVEL SWITCH |
| | | SPRINKLER PRESSURE SWITCH |
| | | SPRINKLER TEMPERATURE SWITCH |

| MOUNTING HEIGHT | SYMBOL | DESCRIPTION |
|---|---|---|
| 90" | | DOOR BELL |
| 90" | | DOOR BUZZER |
| 90" | | DOOR CHIME |
| 60" | D | DOOR SIGNAL |
| 48" | ES | ELECTRIC STRIKE |
| 48" | ML | MAGNETIC LOCK |
| 48" | CL | COMBINATION LOCK |
| 84" | DC | DOOR CONTACT |
| 48" | CR | CARD READER |
| 48" | | SECURITY KEYPAD |
| 90" | MD | MOTION DETECTOR |
| | | SECURITY CAMERA |

## ELECTRICAL ABBREVIATIONS LIST

| | | | | | | | |
|---|---|---|---|---|---|---|---|
| 1P | 1 POLE (2P, 3P, 4P, ETC.) | CTR | CENTER | HT | HEIGHT | NEMA | NATIONAL ELECTRICAL MANUFACTURER'S ASSOCIATION |
| A | AMPERE | CU | COPPER | HTG | HEATING | NFDS | NON-FUSED SAFETY DISCONNECT SWITCH |
| AC | ABOVE COUNTER | DCP | DOMESTIC WATER CIRCULATING PUMP | HTR | HEATER | NIC | NOT IN CONTRACT |
| ACLG | ABOVE CEILING | DEPT | DEPARTMENT | HV | HIGH VOLTAGE | NL | NIGHT LIGHT |
| ADO | AUTOMATIC DOOR OPENER | DET | DETAIL | HVAC | HEATING, VENTILATING AND AIR CONDITIONING | N.O. | NORMALLY OPEN |
| AF | AMP FRAME | DIA | DIAMETER | IC | INTERRUPTING CAPACITY | NPF | NORMAL POWER FACTOR |
| AFF | ABOVE FINISHED FLOOR | DISC | DISCONNECT | IG | ISOLATED GROUND | NTS | NOT TO SCALE |
| AFG | ABOVE FINISHED GRADE | DIST | DISTRIBUTION | IMC | INTERMEDIATE METAL CONDUIT | OH | OVERHEAD |
| AFI | ARC FAULT CIRCUIT INTERRUPTER | DN | DOWN | INCAND | INCANDESCENT | OL | OVERLOADS |
| AHU | AIR HANDLING UNIT | DPR | DAMPER | IR | INFRARED | PA | PUBLIC ADDRESS |
| AL | ALUMINUM | DS | SAFETY DISCONNECT SWITCH | I/W | INTERLOCK WITH | PB | PULL BOX OR PUSHBUTTON |
| ALT | ALTERNATE | DT | DOUBLE THROW | J-BOX | JUNCTION BOX | PE | PNEUMATIC ELECTRIC |
| AMP | AMPERE | DWG | DRAWING | KV | KILOVOLT | PED | PEDESTAL |
| AMPL | AMPLIFIER | EC | ELECTRICAL CONTRACTOR | KVA | KILOVOLT-AMPERE | PF | POWER FACTOR |
| ANNUN | ANNUNCIATOR | ELEC | ELECTRIC, ELECTRICAL | KVAR | KILOVOLT-AMPERE REACTIVE | PH | PHASE |
| APPROX | APPROXIMATELY | ELEV | ELEVATOR | KW | KILOWATT | PIV | POST INDICATING VALVE |
| AQ-STAT | AQUASTAT | EM | EMERGENCY | KWH | KILOWATT HOUR | PNL | PANEL |
| ARCH | ARCHITECT, ARCHITECTURAL | EMS | ENERGY MANAGEMENT SYSTEM | LOC | LOCATE OR LOCATION | PP | POWER POLE |
| AS | AMP SWITCH | EMT | ELECTRICAL METALLIC TUBING | LT | LIGHT | PR | PAIR |
| AT | AMP TRIP | EP | ELECTRIC PNEUMATIC | LTG | LIGHTING | PRI | PRIMARY |
| ATS | AUTOMATIC TRANSFER SWITCH | EQUIP | EQUIPMENT | LTNG | LIGHTNING | PROJ | PROJECTION |
| AUTO | AUTOMATIC | EWC | ELECTRIC WATER COOLER | LV | LOW VOLTAGE | PRV | POWER ROOF VENTILATOR |
| AUX | AUXILIARY | EXIST | EXISTING | MAX | MAXIMUM | PT | POTENTIAL TRANSFORMER |
| AV | AUDIO VISUAL | EXH | EXHAUST | MAG.S | MAGNETIC STARTER | PVC | POLYVINYL CHLORIDE (CONDUIT) |
| AWG | AMERICAN WIRE GAUGE | EXP | EXPLOSION PROOF | M/C | MOMENTARY CONTACT | PWR | POWER |
| BATT | BATTERY | FA | FIRE ALARM | MC | MECHANICAL CONTRACTOR | QUAN | QUANTITY |
| BD | BOARD | FABP | FIRE ALARM BOOSTER POWER SUPPLY PANEL | MCB | MAIN CIRCUIT BREAKER | RCPT | RECEPTACLE |
| BLDG | BUILDING | FACP | FIRE ALARM CONTROL PANEL | MCC | MOTOR CONTROL CENTER | REQD | REQUIRED |
| BMS | BUILDING MANAGEMENT SYSTEM | FCU | FAN COIL UNIT | MDC | MAIN DISTRIBUTION CENTER | RM | ROOM |
| C | CONDUIT | FIXT | FIXTURE | MDP | MAIN DISTRIBUTION PANEL | RSC | RIGID STEEL CONDUIT |
| CAB | CABINET | FLR | FLOOR | MFR | MANUFACTURER | RTU | ROOF TOP UNIT |
| CAT | CATALOG | FLUOR | FLUORESCENT | MFS | MAIN FUSED DISCONNECT SWITCH | SC | SURFACE CONDUIT |
| CATV | CABLE TELEVISION | FU | FUSE | MH | MANHOLE | SEC | SECONDARY |
| CB | CIRCUIT BREAKER | FUDS | FUSED SAFETY DISCONNECT SWITCH | MIC | MICROPHONE | SHT | SHEET |
| CCTV | CLOSED CIRCUIT TELEVISION | GA | GAUGE | MIN | MINIMUM | SIM | SIMILAR |
| CKT | CIRCUIT | GAL | GALLON | MISC | MISCELLANEOUS | S/N | SOLID NEUTRAL |
| CLG | CEILING | GALV | GALVANIZED | MLO | MAIN LUGS ONLY | SPEC | SPECIFICATION |
| COMB | COMBINATION | GC | GENERAL CONTRACTOR | MMS | MANUAL MOTOR STARTER | SPKR | SPEAKER |
| CMPR | COMPRESSOR | GEN | GENERATOR | MOA | MULTIOUTLET ASSEMBLY | SP | SPARE |
| CONN | CONNECTION | GFI | GROUND FAULT CIRCUIT INTERRUPTER | MSP | MOTOR STARTER PANELBOARD | SR | SURFACE RACEWAY |
| CONST | CONSTRUCTION | GFP | GROUND FAULT PROTECTOR | MSBD | MAIN SWITCHBOARD | SS | STAINLESS STEEL |
| CONT | CONTINUATION OR CONTINUOUS | GND | GROUND | MT | MOUNT | SSW | SELECTOR SWITCH |
| CONTR | CONTRACTOR | GRS | GALVANIZED RIGID STEEL (CONDUIT) | MT.C | EMPTY CONDUIT | S/S | STOP/START PUSHBUTTONS |
| CONV | CONVECTOR | GYP BD | GYPSUM BOARD | MTS | MANUAL TRANSFER SWITCH | STA | STATION |
| CP | CIRCULATING PUMP | HOA | HANDS-OFF-AUTOMATIC SWITCH | MTR | MOTOR, MOTORIZED | STD | STANDARD |
| CRT | CATHODE-RAY TUBE | HORIZ | HORIZONTAL | N.C. | NORMALLY CLOSED | SURF | SURFACE MOUNTED |
| CT | CURRENT TRANSFORMER | HP | HORSEPOWER | NEC | NATIONAL ELECTRICAL CODE | SW | SWITCH |
| | | HPF | HIGH POWER FACTOR | | | SWBD | SWITCHBOARD |
| | | | | | | SYM | SYMMETRICAL |
| | | | | | | SYS | SYSTEM |
| | | | | | | TEL | TELEPHONE |
| | | | | | | TEL/DATA | TELEPHONE/DATA |
| | | | | | | TERM | TERMINAL |
| | | | | | | TL | TWIST LOCK |
| | | | | | | TR | TAMPER RESISTANT |
| | | | | | | T-STAT | THERMOSTAT |
| | | | | | | TTC | TELEPHONE TERMINAL CABINET |
| | | | | | | TV | TELEVISION |
| | | | | | | TVTC | TELEVISION TERMINAL CABINET |
| | | | | | | TYP | TYPICAL |
| | | | | | | UC | UNDER COUNTER |
| | | | | | | UE | UNDERGROUND ELECTRICAL |
| | | | | | | UG | UNDERGROUND |
| | | | | | | UH | UNIT HEATER |
| | | | | | | UT | UNDERGROUND TELEPHONE |
| | | | | | | UTIL | UTILITY |
| | | | | | | UV | ULTRAVIOLET |
| | | | | | | V | VOLT |
| | | | | | | VA | VOLT-AMPERES |
| | | | | | | VDT | VIDEO DISPLAY TERMINAL |
| | | | | | | VERT | VERTICAL |
| | | | | | | VFD | VARIABLE FREQUENCY DRIVE |
| | | | | | | VOL | VOLUME |
| | | | | | | W | WATT |
| | | | | | | W/ | WITH |
| | | | | | | WG | WIRE GUARD |
| | | | | | | WH | WATER HEATER |
| | | | | | | W/O | WITHOUT |
| | | | | | | WP | WEATHERPROOF |
| | | | | | | XFMR | TRANSFORMER |
| | | | | | | XFR | TRANSFER |
| | | | | | | ∠ | ANGLE |
| | | | | | | @ | AT |
| | | | | | | ▲ | DELTA |
| | | | | | | ' | FEET |
| | | | | | | " | INCHES |
| | | | | | | # | NUMBER |
| | | | | | | Ø | PHASE |
| | | | | | | C | CENTER LINE |
| | | | | | | P | PLATE |

## ELECTRICAL SYMBOL NOTES

A P1-2 — THE LIGHTING FIXTURE TYPE IS INDICATED BY AN UPPER CASE LETTER. THE CIRCUIT DESIGNATION IS INDICATED BY A NUMBER. THE SWITCH DESIGNATION IS INDICATED BY A LOWER CASE LETTER.

EXAMPLE 1: LIGHTING FIXTURE TYPE "A" IS CONNECTED TO CIRCUIT P1-2 AND CONTROLLED BY SWITCH "b".

E1 P1-4 — EXIT LIGHTS. STEM INDICATES WALL MOUNTING. NO STEM INDICATES CEILING MOUNTING. SHADED AREA INDICATES ILLUMINATED FACE(S). ARROW INDICATES DIRECTIONAL ARROW ON ILLUMINATED FACE(S). THE CIRCUIT DESIGNATION IS INDICATED BY A NUMBER. EXAMPLE: THE WALL MOUNTED EXIT LIGHT TYPE "E1" WITH SINGLE FACE AND DIRECTIONAL ARROW IS CONNECTED TO CIRCUIT P1-4.

c P1-6 — DEVICES. THE CIRCUIT DESIGNATION IS INDICATED BY A NUMBER. THE SWITCH DESIGNATION IS INDICATED BY A LOWER CASE LETTER. EXAMPLE: SPLIT DUPLEX RECEPTACLE IS CONNECTED TO CIRCUIT P1-6 AND ONE RECEPTACLE OUTLET IS CONTROLLED BY SWITCH "c".

d — THE CONTROL DEVICE DESIGNATION IS INDICATED BY A LOWER CASE LETTER. EXAMPLE: SINGLE POLE SWITCH "d" TO CONTROL LIGHTING FIXTURES INDICATED BY "d".

D e — WALL BOX DIMMER WITH SIZE AS INDICATED AT DEVICE. EXAMPLE: 600 WATT WALL BOX DIMMER TO CONTROL LIGHTING FIXTURES INDICATED BY "e". SEE SPECIFICATIONS FOR WATTAGE IF NOT INDICATED.

1 P1-1,3,5 — SPECIAL CONNECTIONS. THE EQUIPMENT IS INDICATED BY A NUMBER. THE CIRCUIT DESIGNATION IS INDICATED BY NUMBER(S) ADJACENT TO THE SYMBOL. EXAMPLE: EQUIPMENT NO. 1; 3 PHASE CONNECTION TO CIRCUITS P1-1, 3, 5.

PANELBOARDS. PANELBOARD DOORS MAY BE SHOWN TO INDICATE OPENING SIDE OF RECESSED PANELBOARDS.

FLOOR CLEARANCE AREA

EF-1 — MOTOR CONNECTIONS. THE MOTOR IS INDICATED BY A NUMBER WITHIN OR CHARACTERS ADJACENT TO THE MOTOR SYMBOL.

T1 — TRANSFORMERS. THE TRANSFORMER TYPE IS INDICATED BY A NUMBER FOLLOWING THE UPPER CASE LETTER "T". SEE THE ELECTRICAL SERVICE RISER DIAGRAM FOR THE TRANSFORMER DESCRIPTION AND REQUIREMENTS. EXAMPLE: TRANSFORMER TYPE "T1".

CONDUIT IN CEILING, FLOOR OR WALL AS REQUIRED BY FIELD CONDITIONS

CONDUIT IN FLOOR

#12 — CONDUIT SHOWN WITHOUT SLASH MARKS SHALL CONTAIN 2 # 12 CONDUCTORS IN 3/4" CONDUIT UNLESS SPECIFIC EQUIPMENT REQUIRES A DIFFERENT SIZE.

#10 — CONDUIT SHOWN SHALL CONTAIN 1 # 10 CONDUCTOR PER PHASE IN 3/4" CONDUIT UNLESS A CONDUCTOR AND CONDUIT SIZE IS SHOWN ADJACENT.

P1-1, 3, 5 — HOME RUN TO BRANCH CIRCUIT PANELBOARD. THE PANELBOARD DESIGNATION IS SHOWN ADJACENT TO THE HOME RUN ARROW WITH THE CIRCUIT DESIGNATION. CIRCUIT BREAKER SIZES (AMPS/NUMBER OF POLES) ARE SHOWN IN THE PANELBOARD SCHEDULE WITH THE CORRESPONDING PANELBOARD AND CIRCUIT DESIGNATION. EXAMPLE: HOME RUN TO PANELBOARD P1; CIRCUITS 1, 3, 5.

GRAPHICAL REPRESENTATION OF PHASING, TYPICAL FOR ALL SYMBOLS.

EXISTING TO REMAIN
EXISTING TO BE REMOVED
NEW
ITEM TO BE REMOVED
AREA NOT IN CONTRACT

REVISION NUMBER - SHOWN ON PLANS

NUMBER OF DETAIL ON SHEET
NUMBER OF SHEET WHERE DETAIL APPEARS

KEYED NOTE (SEE SCHEDULE)

OS S 1 — ELECTRICAL ACCESSORY NOTE (SEE SCHDULE)

## GENERAL ELECTRICAL NOTES & SPECIFICATIONS

A. ALL ELECTRICAL WORK SHALL COMPLY WITH ALL CURRENT REQUIREMENTS OF FEDERAL, STATE, AND LOCAL CODES.

B. ALL ELECTRICAL WORK SHALL COMPLY WITH THE LATEST ADOPTED EDITION OF THE NATIONAL ELECTRICAL CODE AND ALL CURRENT REQUIREMENTS OF THE AMERICANS WITH DISABILITIES ACT (ADA), AS A MINIMUM STANDARD.

C. ALL WIRING SHALL BE INSTALLED USING PROPERLY SIZED CONDUCTORS IN CABLES, RACEWAYS, CONDUIT, AND FLEXIBLE CONDUIT. CONDUIT ABOVE GRADE INSIDE THE BUILDING SHALL BE GALVANIZED STEEL ELECTRICAL METALLIC TUBING (EMT) WITH SET SCREW FITTINGS, UNLESS OTHERWISE NOTED. CONDUIT BELOW GRADE AND IN OR BELOW CONCRETE SLABS SHALL BE SCHEDULE 40 PVC, 90 C RATED, WITH FITTINGS REQUIRED TO PROVIDE MOISTURE PROOF JOINTS, UNLESS OTHERWISE NOTED. TYPE NM (ROMEX) CABLE MAY BE USED FOR BRANCH CIRCUIT WIRING IF ALLOWED BY THE LOCAL AHJ.

D. WIRING AND CABLE SHALL BE RATED AT 600 VOLTS AND 98% CONDUCTIVITY COPPER. MINIMUM SIZE CONDUCTOR FOR LIGHTING AND POWER SHALL BE #12 AWG. CONDUCTORS SIZED #10 AWG AND SMALLER SHALL BE TYPE 'THWN/THHN' SOLID OR STRANDED. CONDUCTORS SIZED #8 AWG AND LARGER SHALL BE TYPE 'THWN/THHN' STRANDED.

E. ALL WIRING DEVICES SHALL BE LISTED BY UNDERWRITERS LABORATORIES AND SHALL BE OF SPECIFICATION GRADE OR BETTER.

F. ALL SAFETY SWITCHES SHALL BE UL LISTED GENERAL DUTY WITH CLASS R FUSES. EXTERIOR SWITCHES SHALL BE NEMA 3R TYPE.

G. ALL ELECTRICAL EQUIPMENT, DEVICES, LIGHTING FIXTURES, AND CONDUIT SHALL INCLUDE SEISMIC SUPPORTS AND RESTRAINTS AS REQUIRED BY APPLICABLE FEDERAL, STATE AND LOCAL CODES TO MEET THE SEISMIC REQUIREMENTS FOR THE PROJECT LOCATION.

H. ALL ELECTRICAL WORK FOR EQUIPMENT SHALL BE INSTALLED IN COMPLIANCE WITH THE MANUFACTURER'S SHOP DRAWINGS, AND INSTALLATION INSTRUCTIONS. VERIFY EXACT LOCATIONS FOR EQUIPMENT & LOCATIONS FOR ELECTRIC FEEDERS TO EQUIPMENT. ALL CONTROL CONDUIT AND WIRING SHALL BE INSTALLED TO COMPLY WITH THE MANUFACTURER'S SHOP DRAWINGS AND INSTALLATIONS INSTRUCTIONS.

I. CAREFULLY LAYOUT ELECTRICAL WORK, COORDINATE WITH OTHER TRADES, AND DETERMINE PROPER ELEVATIONS FOR ALL COMPONENTS. VERIFY EXACT LOCATIONS AND ELEVATION OF ALL ELECTRICAL WORK.

J. COORDINATE LOCATIONS OF DEVICES WITH ARCHITECTURAL ELEVATIONS AND DETAILS. ARCHITECTURAL ELEVATIONS AND DETAILS TAKE PRECEDENCE OVER LOCATIONS SHOWN ON ELECTRICAL DRAWINGS.

K. VERIFY LOCATIONS AND ROUGH-IN REQUIREMENTS OF ALL OWNER FURNISHED EQUIPMENT PRIOR TO ROUGH-IN.

L. WIRING SHALL BE INSTALLED CONCEALED WHERE POSSIBLE WITHIN WALLS, FLOORS, ABOVE CEILINGS & IN CHASES. ALL ELECTRICAL WORK SHALL BE INSTALLED IN A NEAT MANNER USING GOOD WORKMANSHIP AND SHALL BE RIGIDLY SECURED IN PLACE TO PROVIDE THE INTENDED SERVICE.

## SPECIFIC CODE NOTES

FIRE PROTECTION REQUIREMENTS

A. PENETRATIONS IN WALLS REQUIRING PROTECTED OPENINGS MUST BE FIRESTOPPED WITH AN APPROVED MATERIAL.

1. CONDUITS MAY PENETRATE WALLS OR PARTITIONS, PROVIDED THEY ARE FIRE-STOPPED.
2. OPENINGS FOR STEEL ELECTRICAL BOXES NOT EXCEEDING 16 SQUARE INCHES ARE PERMITTED PROVIDED OPENINGS DO NOT AGGREGATE MORE THAN 100 SQUARE INCHES FOR ANY 100 SQUARE FEET OF WALL OR PARTITION.
3. OUTLET BOXES ON OPPOSITE SIDES OF WALLS OR PARTITIONS MUST BE SEPARATED BY A HORIZONTAL DISTANCE OF 24 INCHES.

B. LIGHT FIXTURES AND OTHER APPARATUS SUPPORTED BY THE ACOUSTICAL CEILING GRID MUST MEET THE REQUIREMENTS OF NEC SECTION 410.16, MEANS OF SUPPORT.

C. RECESSED LIGHTING FIXTURES INSTALLED IN FIRE RATED CEILING ASSEMBLIES SHALL BE FIRE RATED FIXTURES BEARING THE UL FIRE RATED LABEL. FIXTURES SHALL BE INSTALLED IN ACCORDANCE WITH THE UL FIRE RESISTANCE DIRECTORY, AND SHALL INCLUDE A FIRE RATED ENCLOSURE INSTALLED OVER THE FIXTURE THAT MEETS THE REQUIREMENTS OF THE UL FIRE RESISTANCE DIRECTORY.

# POINSETT COUNTY COURT ANNEX
# POINSETT COUNTY
## Harrisburg, Arkansas


BRACKETT KRENNERICH architects
100 East Huntington Ave. Suite D P.O. Box 1655 870-932-0571 Fax 870-932-0975 www.bkarchts.com


| Revision Schedule | | | |
|---|---|---|---|
| Tag | Rev. Description | Rev. Date | Issued by |

STATE OF ARKANSAS ★★★ REGISTERED PROFESSIONAL ENGINEER ★★★ MARK DAVID STRICKLAND
07/26/2024
MARK D. STRICKLAND, P.E.
ENGINEER LICENSE NO. 11187


STRICKLAND ENGINEERING
CIVIL MECHANICAL ELECTRICAL ENGINEERING
113 WEST MAIN STREET JACKSON, MISSOURI 63755
TEL: 573-243-4080 FAX: 573-243-2191




Commission Number 2237 (SE 23-232)

E100

July 26, 2024

ELECTRICAL TITLE SHEET

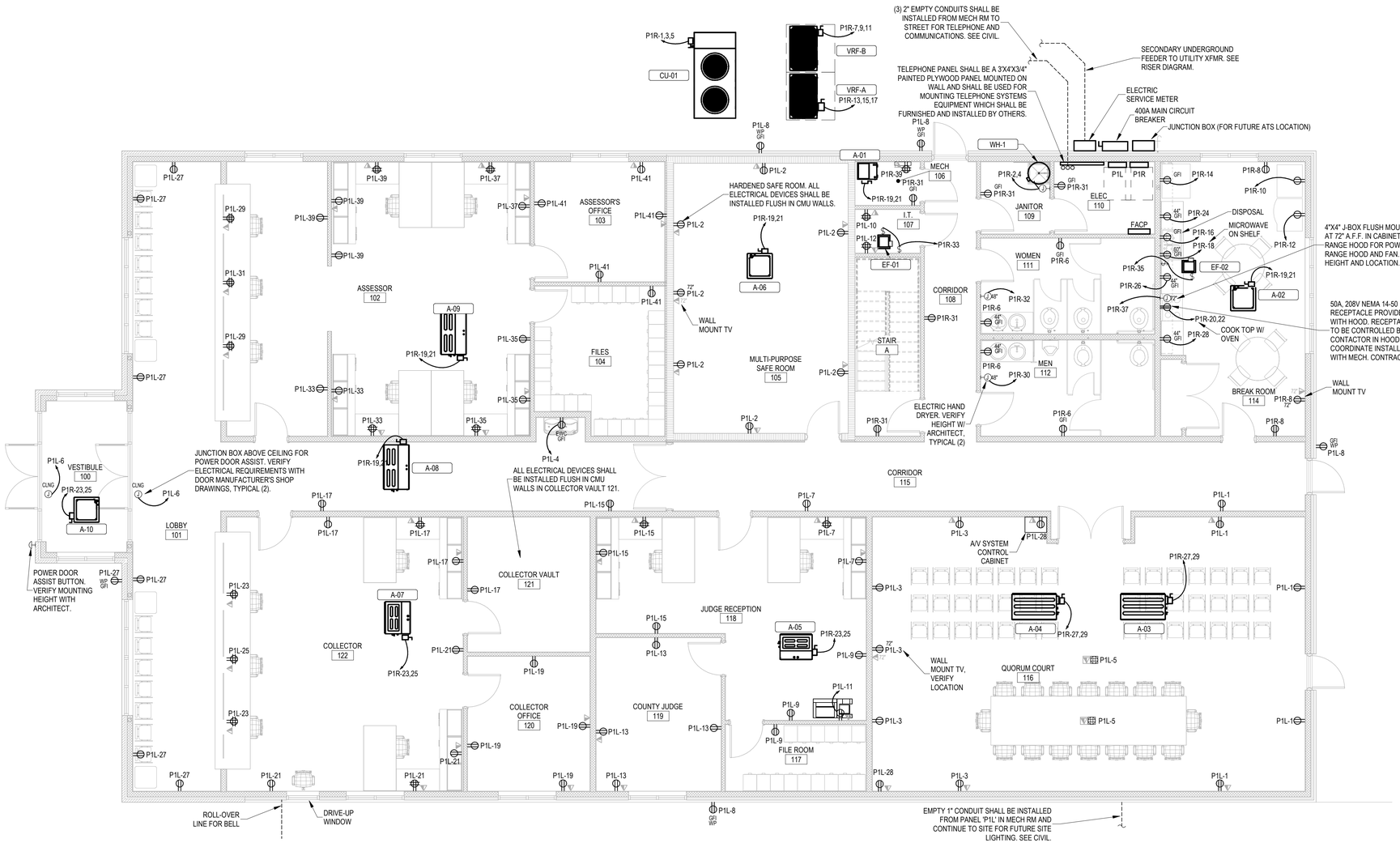


1 / E101 FIRST FLOOR - POWER PLAN
3/16" = 1'-0"

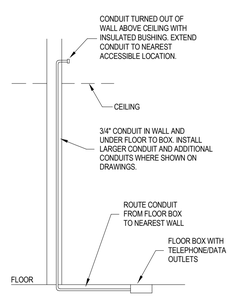


TYPICAL BOX AND CONDUIT FLOOR BOX
NOT TO SCALE

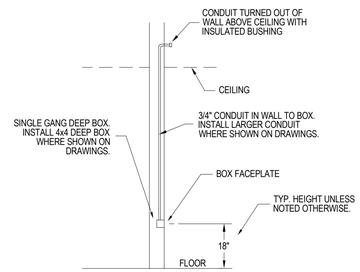


TYPICAL BOX AND CONDUIT WALL BOX
NOT TO SCALE

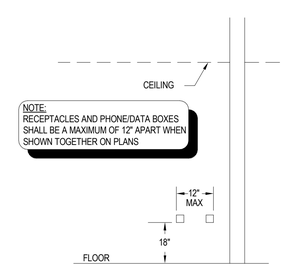


TYPICAL RECEPTACLE AND DATA BOX ELVATION
NOT TO SCALE

## POWER GENERAL NOTES

A WHERE CONNECTED TO A 20A. BRANCH CIRCUIT SUPPLYING AN INDIVIDUAL RECEPTACLE (SIMPLEX OR DUPLEX), THE RECEPTACLE SHALL BE RATED AT 20A.

B WIRING DEVICES SHALL BE INSTALLED IN LOCATIONS AS INDICATED ON PLANS. COORDINATE WITH OTHER TRADES BEFORE CONSTRUCTION TO AVOID CONFLICTS IN THE FIELD. IF CONFLICT ARISES, CONTACT THE ENGINEER FOR RESOLUTION.

C WIRE COUNTS FOR CIRCUIT CONDUCTORS ARE NOT SHOWN. PROVIDE PROPER NUMBER OF CONDUCTORS TO ACHIEVE CIRCUIT AND SWITCHING CONNECTIONS SHOWN.

D CIRCUIT WIRING IS NOT SHOWN EXCEPT FOR SWITCHING INTENT OF FIXTURES AND CONTROL OF DEVICES.

E CIRCUIT NUMBERS AT DEVICES CORRESPOND TO PANELBOARD BREAKERS (SEE PANELBOARD SCHEDULE). BRANCH CIRCUITS SHALL BE SIZED ACCORDING TO THE CIRCUIT BREAKER RATING, UNLESS INDICATED OTHERWISE ON THE ELECTRICAL EQUIPMENT SCHEDULE.

F ALL DEVICE HEIGHTS LISTED ARE TO THE CENTER LINE OF THE DEVICE UNLESS OTHERWISE NOTED.

STRICKLAND ENGINEERING
CIVIL MECHANICAL ELECTRICAL ENGINEERING
113 WEST MAIN STREET JACKSON, MISSOURI 63755
TEL: 573-243-4080 FAX: 573-243-2191


POINSETT COUNTY COURT ANNEX
# POINSETT COUNTY
Harrisburg, Arkansas

BRACKETT KRENNERICH architects
100 East Huntington Ave. Suite D P.O. Box 1655 870-932-0571 Fax 870-932-0975 www.bkarchts.com

| Revision Schedule | | | |
|---|---|---|---|
| Tag | Rev. Description | Rev. Date | Issued by |

STATE OF ARKANSAS
REGISTERED PROFESSIONAL ENGINEER
No. 11187
07/26/2024
MARK D. STRICKLAND, P.E.
ENGINEER LICENSE NO. 11187

Commission Number 2237 (SE 23-232)

E101

July 26, 2024

FIRST FLOOR POWER PLAN

C:\Users\jwright\Documents\MPE24_Poinsett
Admin@strickandengineering.com.rvt
8/2/2024 10:25:40 AM

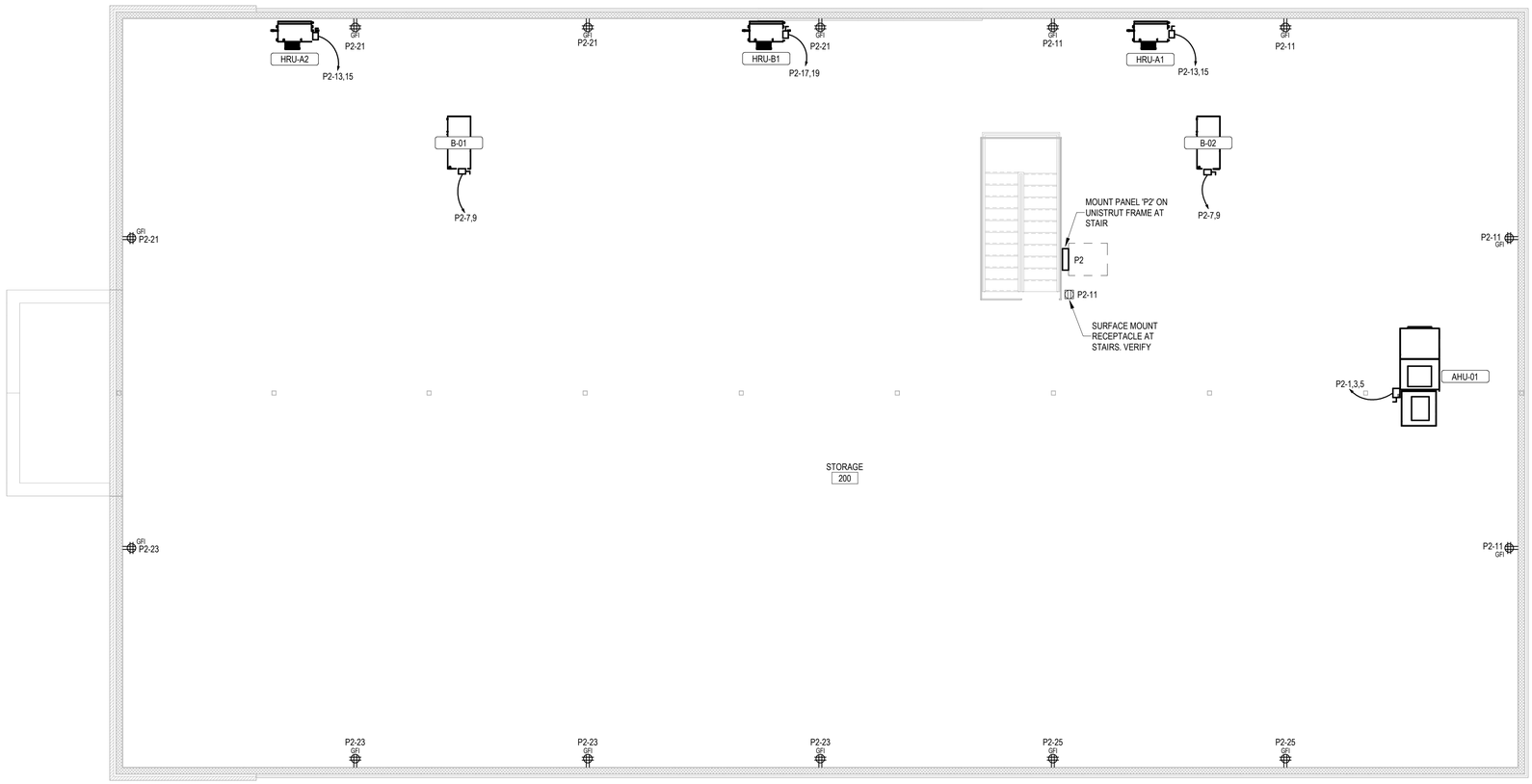


1 E102 SECOND FLOOR - POWER PLAN
3/16" = 1'-0"

ELECTRICAL SERVICE GROUNDING NOTES:

1. CONNECTION TO ELECTRODES REQUIRE (2) LISTED BOLTED CLAMPS OF CAST BRONZE OR BRASS, OR PLAIN OR MALLEABLE IRON, PER LOCAL CODE AMENDMENT.
2. PROVIDE BONDING CONNECTION AT THE BUILDING SIDE OF THE WATER METER TO ALLOW ALL INTERIOR METAL PIPING TO BE BONDED TO THE BUILDING GROUNDING SYSTEM.
3. THE WATER HEATER SHALL BE JUMPERED BETWEEN THE COLD AND HOT WATER PIPES TO PROVIDE BONDING OF THE WATER PIPE SYSTEM AT THE WATER HEATER. THE JUMPER SHALL BE SIZED ACCORDING TO NEC TABLE 250.166 PER NEC 250.104(A)(1).

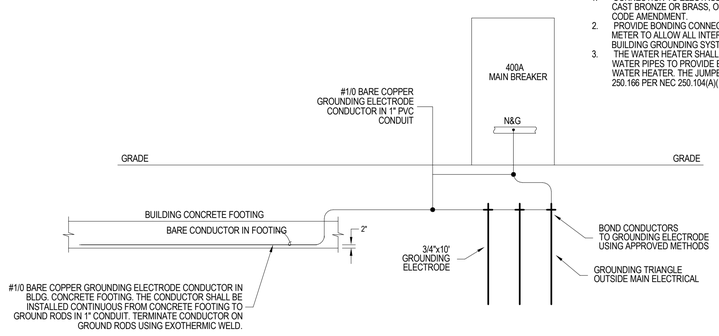


ELECTRICAL SERVICE GROUNDING RISER DIAGRAM

NOT TO SCALE

## POWER GENERAL NOTES

A WHERE CONNECTED TO A 20A. BRANCH CIRCUIT SUPPLYING AN INDIVIDUAL RECEPTACLE (SIMPLEX OR DUPLEX), THE RECEPTACLE SHALL BE RATED AT 20A.

B WIRING DEVICES SHALL BE INSTALLED IN LOCATIONS AS INDICATED ON PLANS. COORDINATE WITH OTHER TRADES BEFORE CONSTRUCTION TO AVOID CONFLICTS IN THE FIELD. IF CONFLICT ARISES, CONTACT THE ENGINEER FOR RESOLUTION.

C WIRE COUNTS FOR CIRCUIT CONDUCTORS ARE NOT SHOWN. PROVIDE PROPER NUMBER OF CONDUCTORS TO ACHIEVE CIRCUIT AND SWITCHING CONNECTIONS SHOWN.

D CIRCUIT WIRING IS NOT SHOWN EXCEPT FOR SWITCHING INTENT OF FIXTURES AND CONTROL OF DEVICES.

E CIRCUIT NUMBERS AT DEVICES CORRESPOND TO PANELBOARD BREAKERS (SEE PANELBOARD SCHEDULE). BRANCH CIRCUITS SHALL BE SIZED ACCORDING TO THE CIRCUIT BREAKER RATING, UNLESS INDICATED OTHERWISE ON THE ELECTRICAL EQUIPMENT SCHEDULE.

F ALL DEVICE HEIGHTS LISTED ARE TO THE CENTER LINE OF THE DEVICE UNLESS OTHERWISE NOTED.

STRICKLAND ENGINEERING
CIVIL MECHANICAL ELECTRICAL ENGINEERING
113 WEST MAIN STREET JACKSON, MISSOURI 63755
TEL: 573-243-4080 FAX: 573-243-2191


Revision Schedule

| Tag | Rev. Description | Rev. Date | Issued by |
|---|---|---|---|

STATE OF ARKANSAS
REGISTERED PROFESSIONAL ENGINEER
JAMES MARK STRICKLAND
07/26/2024
MARK D. STRICKLAND, P.E.
ENGINEER LICENSE NO. 11187

Commission Number 2237 (SE 23-232)

E102

July 26, 2024

POINSETT COUNTY COURT ANNEX

# POINSETT COUNTY

Harrisburg, Arkansas

BRACKETT KRENNERICH architects
100 East Huntington Ave. Suite D P.O. Box 1655 870-932-0571 Fax 870-932-0975 www.bkarchts.com

SECOND FLOOR POWER PLAN

C:\Users\owright\Documents\MPE24_Poinsett
Central_owright@strickandengineering.com.rvt
8/2/2024 10:26:43 AM

## PANEL: P1L

**LOCATION:** ELEC 110
**SUPPLY FROM:** MAIN CIRCUIT BREAKER
**MOUNTING:** SURFACE NEMA 1
**MAIN DEVICE:** 400 A MAIN CB

**BUS AMPS:** 400 AMPS
**VOLTAGE:** 208Y/120V 3P 4W
**A.I.C. RATING:** 18,000 AMPS SYMMETRICAL
**NEUTRAL:** 100.00%

| CKT | CIRCUIT BREAKER | WIRE SIZE | CIRCUIT DESCRIPTION | A | | B | | C | | CIRCUIT DESCRIPTION | WIRE SIZE | CIRCUIT BREAKER | CKT |
|---|---|---|---|---|---|---|---|---|---|---|---|---|---|
| 1 | 20 A/1 | #12 | RCPT Room 115, 116 | 900 VA | 1260 VA | | | | | RCPT MULTI-PURPOSE SAFE ROOM 105 | #12 | 20 A/1 | 2 |
| 3 | 20 A/1 | #12 | RCPT QUORUM COURT 116 | | | 900 VA | 1200 VA | | | SPEC EWC LOBBY 101 | #12 | 20 A/1 | 4 |
| 5 | 20 A/1 | #12 | RCPT QUORUM COURT 116 | | | | | 720 VA | 1200 VA | MTR DOOR ASSIST VEST. 100 | #12 | 20 A/1 | 6 |
| 7 | 20 A/1 | #12 | RCPT Room 115, 118 | 540 VA | 720 VA | | | | | RCPT EXTERIOR | #12 | 20 A/1 | 8 |
| 9 | 20 A/1 | #12 | RCPT Room 117, 118 | | | 540 VA | 1200 VA | | | RCPT I.T. 107 | #12 | 20 A/1 | 10 |
| 11 | 20 A/1 | #12 | SPEC COPIER JUDGE RECEPTION 118 | | | | | 1200 VA | 1200 VA | RCPT I.T. 107 | #12 | 20 A/1 | 12 |
| 13 | 20 A/1 | #12 | RCPT COUNTY JUDGE 119 | 720 VA | 1273 VA | | | | | LITES Room 101, 115, 114, 111, 112, 108, 110,... | #12 | 20 A/1 | 14 |
| 15 | 20 A/1 | #12 | RCPT Room 118, 101 | | | 720 VA | 760 VA | | | LITES Room 102, 105, 103, 104 | #12 | 20 A/1 | 16 |
| 17 | 20 A/1 | #12 | RCPT Room 122, 121, 101 | | | | | 900 VA | 1444 VA | LITES Room 122, 121, 120, 119, 117, 118, 116 | #12 | 20 A/1 | 18 |
| 19 | 20 A/1 | #12 | RCPT COLLECTOR OFFICE 120 | 720 VA | 76 VA | | | | | LITES Room 100, 115 | #12 | 20 A/1 | 20 |
| 21 | 20 A/1 | #12 | RCPT COLLECTOR 122 | | | 720 VA | 788 VA | | | LITES STORAGE 200 | #12 | 20 A/1 | 22 |
| 23 | 20 A/1 | #12 | RCPT COLLECTOR 122 | | | | | 720 VA | 316 VA | LITES EXTERIOR | #12 | 20 A/1 | 24 |
| 25 | 20 A/1 | #12 | RCPT COLLECTOR 122 | 360 VA | 76 VA | | | | | LITES EXTERIOR TYPE 'Z' | #12 | 20 A/1 | 26 |
| 27 | 20 A/1 | #12 | RCPT LOBBY 101 | | | 1260 VA | 1200 VA | | | SPEC A/V SYSTEM CONTROL CABINET | #12 | 20 A/1 | 28 |
| 29 | 20 A/1 | #12 | RCPT ASSESSOR 102 | | | | | 720 VA | 1200 VA | LITES FUTURE SITE LTG | #12 | 20 A/1 | 30 |
| 31 | 20 A/1 | #12 | RCPT ASSESSOR 102 | 360 VA | | | | | | | | | 32 |
| 33 | 20 A/1 | #12 | RCPT ASSESSOR 102 | | | 540 VA | | | | | | | 34 |
| 35 | 20 A/1 | #12 | RCPT ASSESSOR 102 | | | | | 540 VA | | | | | 36 |
| 37 | 20 A/1 | #12 | RCPT ASSESSOR 102 | 360 VA | | | | | | | | | 38 |
| 39 | 20 A/1 | #12 | RCPT ASSESSOR 102 | | | 720 VA | | | | | | | 40 |
| 41 | 20 A/1 | #12 | RCPT ASSESSOR'S OFFICE 103 | | | | | 900 VA | | | | | 42 |
| | | | | 42422 VA | | 45683 VA | | 41900 VA | | | | | |
| | | | | 354 A | | 381 A | | 349 A | | | | | |

| LOAD CLASSIFICATION | CONNECTED | DEMAND | ESTIMATED | PANEL TOTALS | |
|---|---|---|---|---|---|
| HVAC | 66992 VA | 100.00% | 66992 VA | | |
| MTR | 1950 VA | 107.69% | 2100 VA | **CONNECTED LOAD** | 129987 VA |
| RCPT | 26820 VA | 68.64% | 18410 VA | **ESTIMATED DEMAND** | 121848 VA |
| LITES | 5925 VA | 125.00% | 7406 VA | **CONNECTED CURRENT** | 361 A |
| SPEC | 8400 VA | 100.00% | 8400 VA | **ESTIMATED DEMAND CURRENT** | 338 A |
| KTCH | 15400 VA | 91.17% | 14040 VA | | |
| HEAT | 4500 VA | 100.00% | 4500 VA | | |

**PANEL SCHEDULE NOTES:**
1. THIS PANEL SHALL BE EQUAL TO A SQUARE 'D' TYPE 'NQ' PANELBOARD WITH TYPE 'QO' BRANCH BREAKERS.
2. ELECTRONIC SUBMITTALS WILL ONLY BE ACCEPTED AT SUBMITTALS@STRICKLANDENGINEERING.COM

## PANEL: P1R

**LOCATION:** ELEC 110
**SUPPLY FROM:** P1L
**MOUNTING:** SURFACE NEMA 1
**MAIN DEVICE:** 400 A MLO

**BUS AMPS:** 400 AMPS
**VOLTAGE:** 208Y/120V 3P 4W
**A.I.C. RATING:** 18,000 AMPS SYMMETRICAL
**NEUTRAL:** 100.00%

| CKT | CIRCUIT BREAKER | WIRE SIZE | CIRCUIT DESCRIPTION | A | | B | | C | | CIRCUIT DESCRIPTION | WIRE SIZE | CIRCUIT BREAKER | CKT |
|---|---|---|---|---|---|---|---|---|---|---|---|---|---|
| 1 | | | | 4558 VA | 2250 VA | | | | | HEAT 4.5KW ELEC WATER HEATER | #10 | 30 A/2 | 2 |
| 3 | 50 A/3 | #8 | HVAC DOAS-01 CU-01 | | | 4558 VA | 2250 VA | | | | | | 4 |
| 5 | | | | | | | | 4558 VA | 720 VA | RCPT Room 202, 203 | #12 | 20 A/1 | 6 |
| 7 | | | | 2965 VA | 540 VA | | | | | RCPT BREAK RM 114 | #12 | 20 A/1 | 8 |
| 9 | 40 A/3 | #8 | HVAC VRF-A OUTDOOR UNIT | | | 2965 VA | 1200 VA | | | SPEC VENDING MACHINE | #12 | 20 A/1 | 10 |
| 11 | | | | | | | | 2965 VA | 1200 VA | SPEC VENDING MACH. BREAK ROOM 114 | #12 | 20 A/1 | 12 |
| 13 | | | | 5786 VA | 1200 VA | | | | | KTCH REFRIGERATOR BREAK ROOM 114 | #12 | 20 A/1 | 14 |
| 15 | 80 A/3 | #4 | HVAC VRF-A OUTDOOR UNIT | | | 5786 VA | 1200 VA | | | KTCH DISPOSAL BREAK ROOM 114 | #12 | 20 A/1 | 16 |
| 17 | | | | | | | | 5786 VA | 1500 VA | KTCH MICROWAVE BREAK ROOM 114 | #12 | 20 A/1 | 18 |
| 19 | 20 A/2 | #12 | HVAC VRF INDOOR UNITS A-05,06,10,12,14 | 563 VA | 4250 VA | | | | | KTCH COOKTOP W/ OVEN REAK ROOM 114 | #8 | 50 A/2 | 20 |
| 21 | | | | | | 563 VA | 4250 VA | | | | | | 22 |
| 23 | 20 A/2 | #12 | HVAC VRF INDOOR UNITS A-09,11,13 | | | | | 353 VA | 1000 VA | KTCH BREAK ROOM 114 | #12 | 20 A/1 | 24 |
| 25 | | | | 353 VA | 1000 VA | | | | | KTCH BREAK ROOM 114 | #12 | 20 A/1 | 26 |
| 27 | 20 A/2 | #12 | HVAC VRF INDOOR UNITS A-07,08 | | | 478 VA | 1000 VA | | | KTCH BREAK ROOM 114 | #12 | 20 A/1 | 28 |
| 29 | | | | | | | | 478 VA | 1200 VA | SPEC HAND DRYER MEN 112 | #12 | 20 A/1 | 30 |
| 31 | 20 A/1 | #12 | RCPT Room 216, 215, 217, 218, 206 | 900 VA | 1200 VA | | | | | SPEC HAND DRYER WOMEN 111 | #12 | 20 A/1 | 32 |
| 33 | 20 A/1 | #12 | MTR EF-01 | | | 75 VA | | | | | | | 34 |
| 35 | 20 A/1 | #12 | MTR EF-02 | | | | | 75 VA | | | | | 36 |
| 37 | 20 A/1 | #12 | MTR HOOD-1 BREAK ROOM 114 | 600 VA | | | | | | | | | 38 |
| 39 | 20 A/1 | #12 | RCPT HVAC CONTROL PANEL ELEC. 106 | | | 1200 VA | | | | | | | 40 |
| 41 | 20 A/1 | #12 | FACP | | | | | 1200 VA | | | | | 42 |
| | | | | 35065 VA | | 35135 VA | | 30846 VA | | | | | |
| | | | | 298 A | | 298 A | | 257 A | | | | | |

| LOAD CLASSIFICATION | CONNECTED | DEMAND | ESTIMATED | PANEL TOTALS | |
|---|---|---|---|---|---|
| HVAC | 66992 VA | 100.00% | 66992 VA | | |
| MTR | 750 VA | 120.00% | 900 VA | **CONNECTED LOAD** | 101022 VA |
| RCPT | 8580 VA | 100.00% | 8580 VA | **ESTIMATED DEMAND** | 99812 VA |
| SPEC | 4800 VA | 100.00% | 4800 VA | **CONNECTED CURRENT** | 280 A |
| KTCH | 15400 VA | 91.17% | 14040 VA | **ESTIMATED DEMAND CURRENT** | 277 A |
| HEAT | 4500 VA | 100.00% | 4500 VA | | |

**PANEL SCHEDULE NOTES:**
1. THIS PANEL SHALL BE EQUAL TO A SQUARE 'D' TYPE 'NQ' PANELBOARD WITH TYPE 'QO' BRANCH BREAKERS.
2. ELECTRONIC SUBMITTALS WILL ONLY BE ACCEPTED AT SUBMITTALS@STRICKLANDENGINEERING.COM

## PANEL: P2

**LOCATION:**
**SUPPLY FROM:** P1R
**MOUNTING:** SURFACE NEMA 1
**MAIN DEVICE:** 400 A MLO

**BUS AMPS:** 400 AMPS
**VOLTAGE:** 208Y/120V 3P 4W
**A.I.C. RATING:** 18,000 AMPS SYMMETRICAL
**NEUTRAL:** 100.00%

| CKT | CIRCUIT BREAKER | WIRE SIZE | CIRCUIT DESCRIPTION | A | | B | | C | | CIRCUIT DESCRIPTION | WIRE SIZE | CIRCUIT BREAKER | CKT |
|---|---|---|---|---|---|---|---|---|---|---|---|---|---|
| 1 | | | | 7917 VA | | | | | | | | | 2 |
| 3 | 90 A/3 | #3 | HVAC DOAS-01 AHU-01 | | | 7917 VA | | | | | | | 4 |
| 5 | | | | | | | | 7917 VA | | | | | 6 |
| 7 | 20 A/2 | #12 | HVAC VRF INDOOR UNITS B-01,02 | 233 VA | | | | | | | | | 8 |
| 9 | | | | | | 233 VA | | | | | | | 10 |
| 11 | 20 A/1 | #12 | RCPT STORAGE 200 | | | | | 1620 VA | | | | | 12 |
| 13 | 20 A/2 | #12 | HVAC HRU-A1,A2 STORAGE 200 | 19 VA | | | | | | | | | 14 |
| 15 | | | | | | 19 VA | | | | | | | 16 |
| 17 | 20 A/2 | #12 | HVAC HRU B1 STORAGE 200 | | | | | 10 VA | | | | | 18 |
| 19 | | | | 10 VA | | | | | | | | | 20 |
| 21 | 20 A/1 | #12 | RCPT STORAGE 200 | | | 1440 VA | | | | | | | 22 |
| 23 | 20 A/1 | #12 | RCPT | | | | | 1440 VA | | | | | 24 |
| 25 | 20 A/1 | #12 | RCPT | 720 VA | | | | | | | | | 26 |
| 27 | | | | | | | | | | | | | 28 |
| 29 | | | | | | | | | | | | | 30 |
| 31 | | | | | | | | | | | | | 32 |
| 33 | | | | | | | | | | | | | 34 |
| 35 | | | | | | | | | | | | | 36 |
| 37 | | | | | | | | | | | | | 38 |
| 39 | | | | | | | | | | | | | 40 |
| 41 | | | | | | | | | | | | | 42 |
| | | | | 8898 VA | | 9609 VA | | 10986 VA | | | | | |
| | | | | 74 A | | 81 A | | 92 A | | | | | |

| LOAD CLASSIFICATION | CONNECTED | DEMAND | ESTIMATED | PANEL TOTALS | |
|---|---|---|---|---|---|
| HVAC | 24273 VA | 100.00% | 24273 VA | | |
| RCPT | 5220 VA | 100.00% | 5220 VA | **CONNECTED LOAD** | 29493 VA |
| | | | | **ESTIMATED DEMAND** | 29493 VA |
| | | | | **CONNECTED CURRENT** | 82 A |
| | | | | **ESTIMATED DEMAND CURRENT** | 82 A |

**PANEL SCHEDULE NOTES:**
1. THIS PANEL SHALL BE EQUAL TO A SQUARE 'D' TYPE 'NQ' PANELBOARD WITH TYPE 'QO' BRANCH BREAKERS.
2. ELECTRONIC SUBMITTALS WILL ONLY BE ACCEPTED AT SUBMITTALS@STRICKLANDENGINEERING.COM

## ELECTRICAL SERVICE NOTES:

1. ELECTRICAL SERVICE SHALL INCLUDE POLE MOUNTED TRANSFORMER.
2. VERIFY TRANSFORMER LOCATION, SEE CIVIL.
3. VERIFY ELECTRICAL SERVICE AND METERING WITH ELECTRIC UTILITY COMPANY. VERIFY LOCATION OF METER.
4. INSTALL ELECTRICAL SERVICE IN COMPLIANCE WITH THE UTILITY CO. ELECTRICAL STANDARDS AND SPECIFICATIONS.
5. ALL FEEDER CONDUITS SHALL BE INSTALLED BELOW GRADE.
6. SEE PANEL SCHEDULES FOR DETAIL OF EACH PANEL.
7. CONTRACTOR SHALL INSTALL ELECTRICAL SERVICE ENTRANCE EQUIPMENT TO WITHSTAND THE AVAILABLE FAULT CURRENT TO THE SERVICE ENTRANCE.
8. CALCULATED AVAILABLE FAULT CURRENT ON THE EXTERIOR MAIN BREAKER IS 13,629 AIC. PROVIDE MAIN BREAKER WITH 22,000 AIC RATING. INSTALL REQUIRED LABELING AT MAIN BREAKER INDICATING THE CALCULATED AVAILABLE FAULT CURRENT.

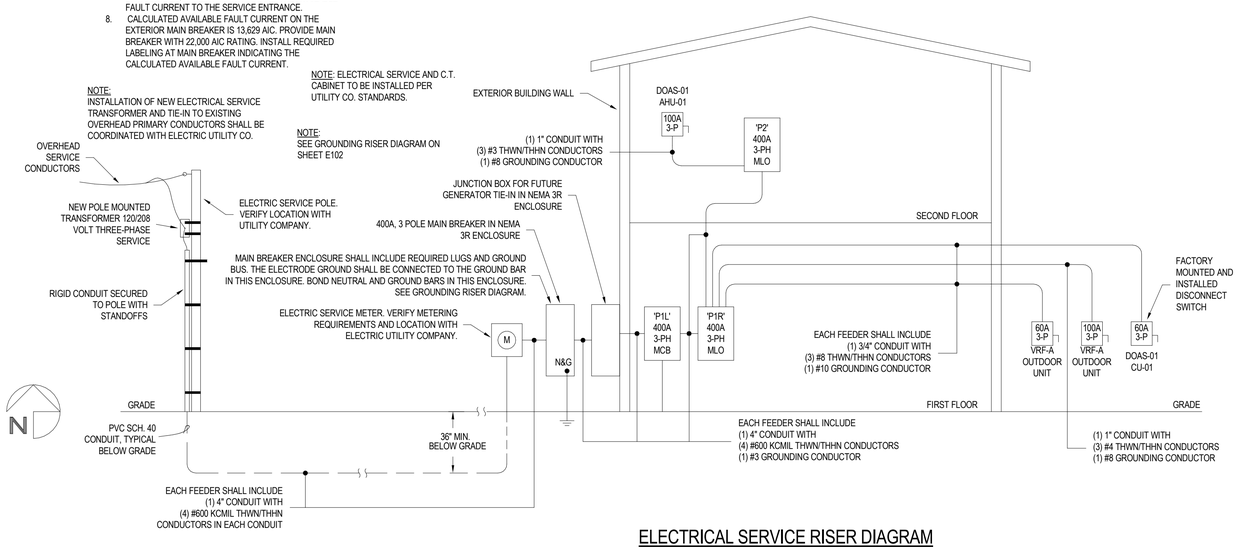


## ELECTRICAL SERVICE RISER DIAGRAM

NOT TO SCALE

STRICKLAND ENGINEERING
CIVIL MECHANICAL ELECTRICAL ENGINEERING
113 West Main Street Jackson, Missouri 63755
Tel: 573-243-4080 Fax: 573-243-2191



POINSETT COUNTY COURT ANNEX
**POINSETT COUNTY**
Harrisburg, Arkansas

BRACKETT KRENNERICH architects
100 East Huntington Ave. Suite D P.O. Box 1655 870-932-0571 Fax 870-932-0975 www.bkarchts.com

| Revision Schedule | | | |
|---|---|---|---|
| Tag | Rev. Description | Rev. Date | Issued by |

STATE OF ARKANSAS
REGISTERED PROFESSIONAL ENGINEER
MARK D. STRICKLAND
07/26/2024
MARK D. STRICKLAND, P.E.
ENGINEER LICENSE NO. 11187

Commission Number 2237 (SE 23-232)

E103

July 26, 2024

ELECTRICAL SCHEDULES & DETAILS

C:\Users\cwright\Documents\MPE24_Poinsett
Created by cwright@stricklandengineering.com.rvt
8/2/2024 10:25:45 AM

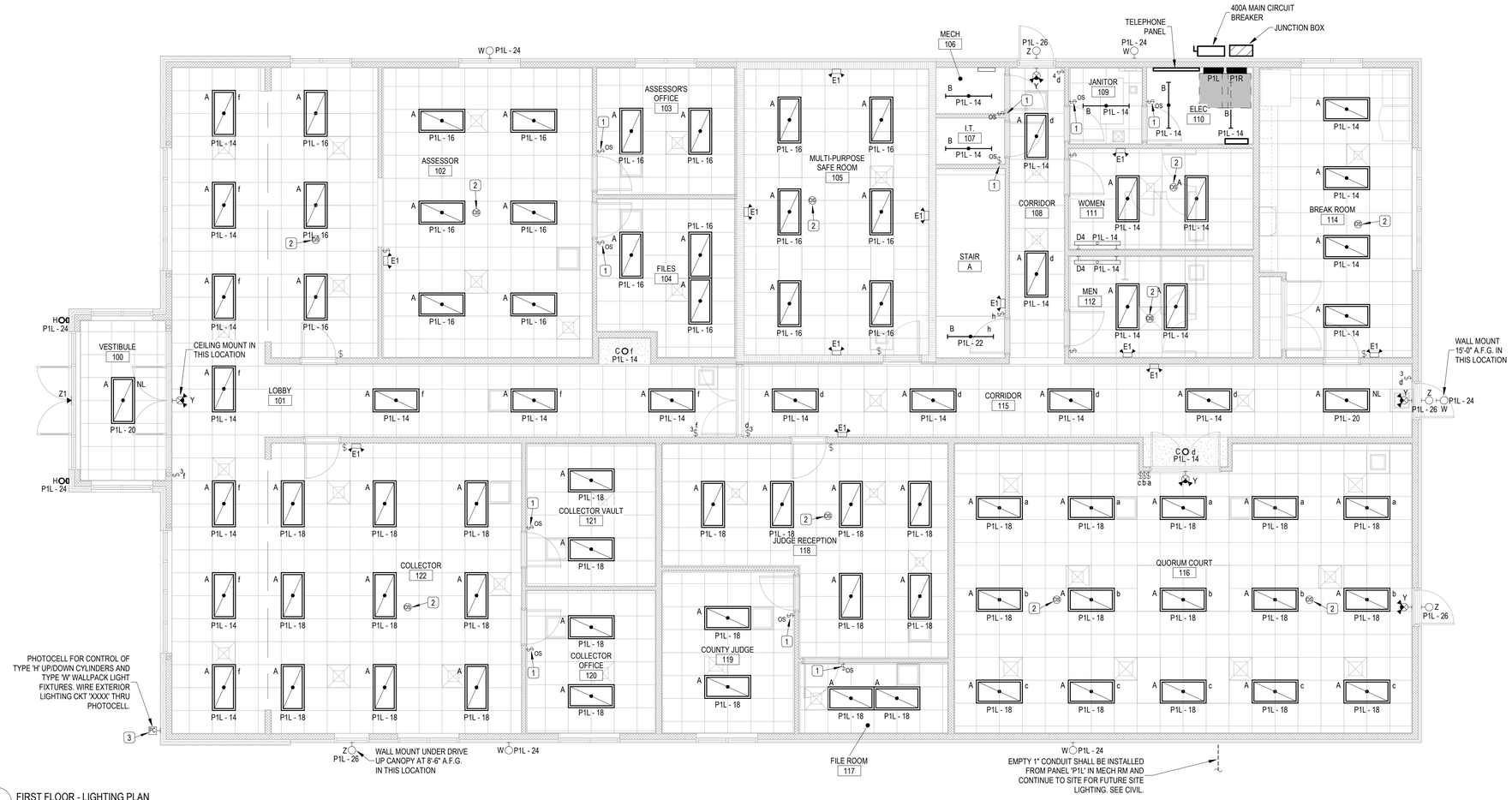


1 / E201 FIRST FLOOR - LIGHTING PLAN
3/16" = 1'-0"

## LIGHTING FIXTURE SCHEDULE

| TYPE | CONSTRUCTION DESCRIPTION | MOUNTING | LIGHT SOURCE LAMP | LUMENS | CCT | ELECTRICAL VOLT | WATTS | PRODUCT MFR | MODEL | COLOR | NOTE |
|---|---|---|---|---|---|---|---|---|---|---|---|
| A | 2x4 GENERAL LED PANEL | RECESSED IN ACT CEILING | LED | 4700 lm | 4000 K | 120 V | 38 W | WILLIAMS | BP-24-LS/8CS-DIM-UNV | MATTE WHITE | -- |
| B | LED 4' STRIPLIGHT | CHAIN HUNG | LED | 5200 lm | 4000 K | 120 V | 36 W | WILLIAMS | 76R-4-L52/840-VBY-2-DIM-UNV | -- | CHAIN HUNG. VERIFY SUSPENSION LENGTH. |
| C | 6" RECESSED DOWNLIGHT | RECESSED | LED | 2000 lm | 4000 K | 120 V | 19 W | WILLIAMS | 6DR-TL-L20/840-DIM-UNV-OW-OF-SG-N-CA1 | SATIN GLOW ANODIZE | -- |
| D4 | 4' UP/DOWN WALL BRACKET | WALL | LED | 8000 lm | 4000 K | 120 V | 72 W | WILLIAMS | MX4WUD-4'00-L12/840U/L8840D-A /F-ASYU-DIM-UNV | MATTE WHITE | 2,000 LM/FT; 18 W/FT; WALL MOUNT 7'-6" A.F.F. CENTERED ABOVE MIRROR |
| E1 | EMERGENCY LIGHTING | WALL | LED | | | 120 V | 1 W | SURE-LITES | APEL | WHITE | WALL MOUNT 8'-0" A.F.F. AT LOCATIONS SHOWN |
| H | UP/DOWN CYLINDER | WALL | LED | 2600 lm | 4000 K | 120 V | 12 W | ALW | CRU6/WL-13834040NN-13834040 NN-NP10-1C-SB | SATIN BLACK | MOUNT ON WALL AT 7'-0" A.F.G. |
| W | TYPE IV WIDE DISTRIBUTION WALL PACK | WALL | | 6000 lm | 4000 K | 120 V | 59 W | INVUE | CCW-VA4-740-U-T4W-BK | BLACK | MOUNT ON WALL AT 12'-0" A.F.G. |
| Y | DUAL HEAD EMERGENCY LIGHT/LED EXIT COMBO UNIT FIXTURE W/ HIGH CAPACITY NICKEL CADMIUM BATTERY FOR 90 MIN. OF EMERGENCY OPERATION | WALL | LED | | | 120 V | 3 W | MULE LIGHTING | AL-U-R-WW-SD | WHITE | MOUNT ON WALL AT 8'-0" A.F.F. UNLESS NOTED OTHERWISE |
| Z | WALLPACK & EMERGENCY EGRESS LIGHT | WALL | LED | 1600 lm | 4000 K | 120 V | 17 W | MULE LIGHTING | MERU-ACEM-BK | BLACK | MOUNT ON WALL AT 8'-6" A.F.G. |
| Z1 | MULLION MOUNT EMEGENCY EGRESS LIGHT | MULLION | LED | | | 120 V | 10 W | MULE LIGHTING | EUEBP10AW-DG | ALUMINUM | VERIFY MOUTING HEIGHT & COLOR WITH ARCHITECT |

## ELECTRICAL ACCESSORY SCHEDULE

| MARK | DESCRIPTION | MANUFACTURER | MODEL | SPECIFICATIONS | REMARKS |
|---|---|---|---|---|---|
| 1 | DUAL TECHNOLOGY WALL SWITCH SENSOR | WATTSTOPPER | DSW-301 | 30 SEC-30 MIN. TIME DELAY | FLUSH MOUNT IN WALL AT 48" A.F.F. AT LOCATIONS SHOWN ON DRAWINGS. |
| 2 | DUAL TECHNOLOGY PASSIVE INFRARED AND ULTRASONIC OCCUPANCY SENSOR, WIDE ANGLE LENS, MINIMUM 1000 SQUARE FEET. | WATTSTOPPER | DT-300 | 12SEC. - 30MIN. TIME DELAY | SURFACE MOUNT ON CEILING IN LOCATIONS SHOWN |
| 3 | PHOTOCONTROL | INTERMATIC | EK4236S | 120V, SPST, UL RATED | MOUNT ON EXTERIOR WALL OF BUILDING AT LOCATION SHOWN NEAR ROOF LINE. SHIELD AS REQ'D. |

## LIGHTING GENERAL NOTES

A LIGHT FIXTURES AND WIRING DEVICES SHALL BE INSTALLED IN LOCATIONS AS INDICATED ON PLANS. COORDINATE WITH OTHER TRADES BEFORE CONSTRUCTION TO AVOID CONFLICTS IN THE FIELD. IF CONFLICT ARISES, CONTACT THE ENGINEER FOR RESOLUTION.

B ALL MOUNTING HEIGHTS FOR LIGHTING FIXTURES ARE TO THE BOTTOM OF THE FIXTURES UNLESS INDICATED OTHERWISE.

C SEE ARCHITECTURAL ELEVATIONS FOR MOUNTING HEIGHTS OF EXTERIOR LIGHTING FIXTURES.

D WIRE COUNTS FOR CIRCUIT CONDUCTORS ARE NOT SHOWN. PROVIDE PROPER NUMBER OF CONDUCTORS TO ACHIEVE CIRCUIT AND SWITCHING CONNECTIONS SHOWN.

E CIRCUIT WIRING IS NOT SHOWN EXCEPT FOR SWITCHING INTENT OF FIXTURES AND CONTROL OF DEVICES.

F CIRCUIT NUMBERS AT DEVICES CORRESPOND TO PANELBOARD BREAKERS (SEE PANELBOARD SCHEDULE). BRANCH CIRCUITS SHALL BE SIZED ACCORDING TO THE CIRCUIT BREAKER RATING, UNLESS INDICATED OTHERWISE ON THE ELECTRICAL EQUIPMENT SCHEDULE.

G ALL TYPE 'E1', 'Y', 'Z' AND 'Z1' EXIT/EMERGENCY LIGHT FIXTURES SHALL BE WIRED TO A UNSWITCHED LEG OF THE LIGHTING CIRCUIT FEEDING THE AREA/ROOM WHERE THE FIXTURES ARE INSTALLED.

H TYPE 'Z' GENERAL LED WALLPACK & EMERGENCY EGRESS LIGHT FIXTURE SHALL BE CONTROLLED THRU PHOTOCELL BUILT-IN TO THE FIXTURE.

I ALL LIGHT FIXTURES WITH 'NL' ARE NIGHT LIGHT FIXTURES AND SHALL REMAIN UNSWITCHED.

STRICKLAND ENGINEERING
CIVIL MECHANICAL ELECTRICAL ENGINEERING
113 WEST MAIN STREET JACKSON, MISSOURI 63755
TEL: 573-243-4080 FAX: 573-243-2191


POINSETT COUNTY COURT ANNEX
# POINSETT COUNTY
Harrisburg, Arkansas

BRACKETT KRENNERICH architects
100 East Huntington Ave. Suite D P.O. Box 1655 870-932-0571 Fax 870-932-0975 www.bkarchts.com

Revision Schedule

| Tag | Rev. Description | Rev. Date | Issued by |
|---|---|---|---|

STATE OF ARKANSAS REGISTERED PROFESSIONAL ENGINEER NO. 11187 MARK D. STRICKLAND
07/26/2024
MARK D. STRICKLAND, P.E.
ENGINEER LICENSE NO. 11187

Commission Number 2237 (SE 23-232)

E201

July 26, 2024

FIRST FLOOR LIGHTING PLAN

C:\Users\cwright\Documents\WPE24_Poinsett
Central\cwright@strickandengineering.com.rvt
8/2/2024 10:25:52 AM

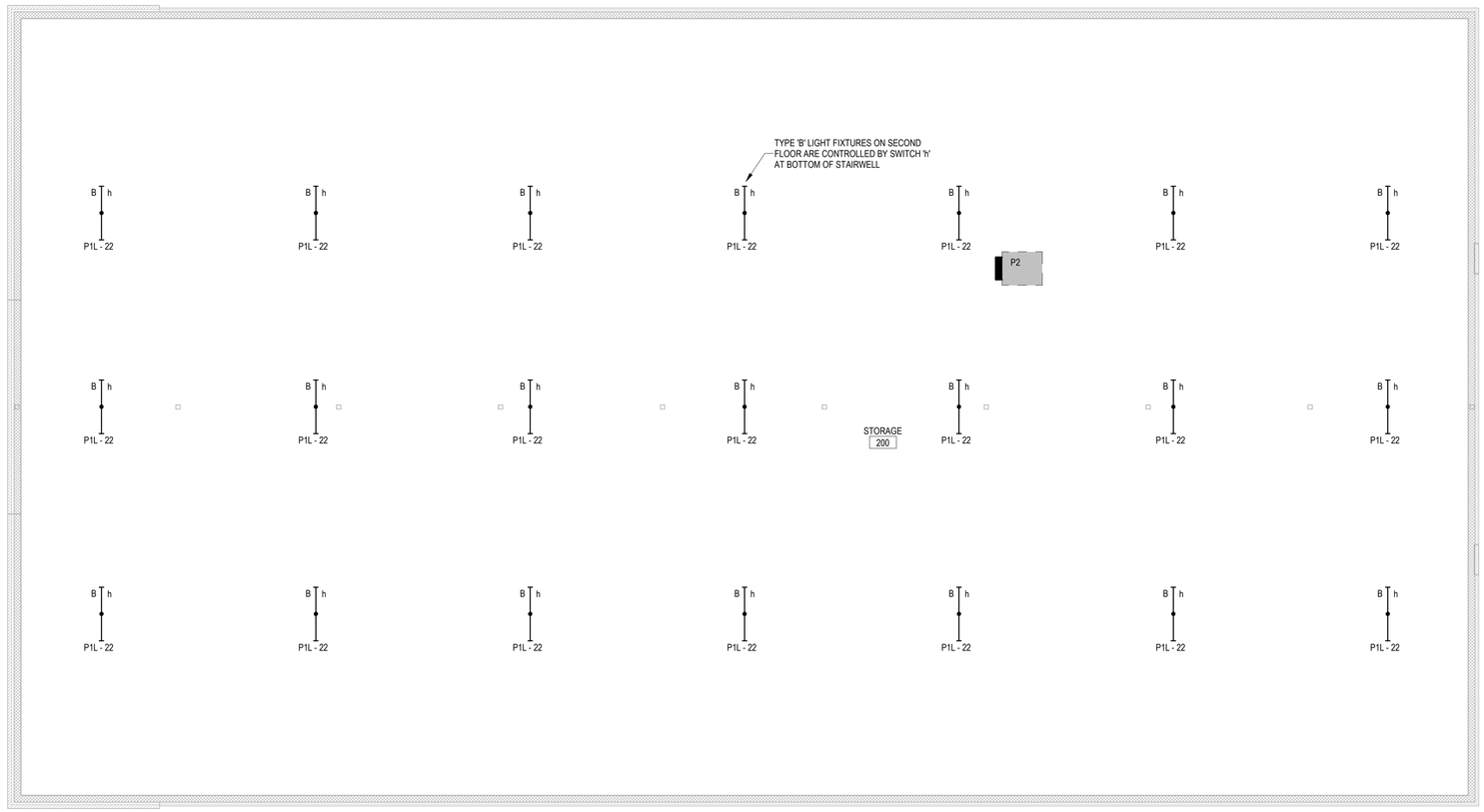


1 E202 SECOND FLOOR - LIGHTING PLAN
3/16" = 1'-0"

## LIGHTING GENERAL NOTES

A LIGHT FIXTURES AND WIRING DEVICES SHALL BE INSTALLED IN LOCATIONS AS INDICATED ON PLANS. COORDINATE WITH OTHER TRADES BEFORE CONSTRUCTION TO AVOID CONFLICTS IN THE FIELD. IF CONFLICT ARISES, CONTACT THE ENGINEER FOR RESOLUTION.

B ALL MOUNTING HEIGHTS FOR LIGHTING FIXTURES ARE TO THE BOTTOM OF THE FIXTURES UNLESS INDICATED OTHERWISE.

C SEE ARCHITECTURAL ELEVATIONS FOR MOUNTING HEIGHTS OF EXTERIOR LIGHTING FIXTURES.

D WIRE COUNTS FOR CIRCUIT CONDUCTORS ARE NOT SHOWN. PROVIDE PROPER NUMBER OF CONDUCTORS TO ACHIEVE CIRCUIT AND SWITCHING CONNECTIONS SHOWN.

E CIRCUIT WIRING IS NOT SHOWN EXCEPT FOR SWITCHING INTENT OF FIXTURES AND CONTROL OF DEVICES.

F CIRCUIT NUMBERS AT DEVICES CORRESPOND TO PANELBOARD BREAKERS (SEE PANELBOARD SCHEDULE). BRANCH CIRCUITS SHALL BE SIZED ACCORDING TO THE CIRCUIT BREAKER RATING, UNLESS INDICATED OTHERWISE ON THE ELECTRICAL EQUIPMENT SCHEDULE.

G ALL TYPE 'E1', 'Y', 'Z' AND 'Z1' EXIT/EMERGENCY LIGHT FIXTURES SHALL BE WIRED TO A UNSWITCHED LEG OF THE LIGHTING CIRCUIT FEEDING THE AREA/ROOM WHERE THE FIXTURES ARE INSTALLED.

H TYPE 'Z' GENERAL LED WALLPACK & EMERGENCY EGRESS LIGHT FIXTURE SHALL BE CONTROLLED THRU PHOTOCELL BUILT-IN TO THE FIXTURE.

I ALL LIGHT FIXTURES WITH 'NL' ARE NIGHT LIGHT FIXTURES AND SHALL REMAIN UNSWITCHED.

STRICKLAND ENGINEERING
CIVIL MECHANICAL ELECTRICAL ENGINEERING
113 WEST MAIN STREET JACKSON, MISSOURI 63755
TEL: 573-243-4080 FAX: 573-243-2191


POINSETT COUNTY COURT ANNEX
# POINSETT COUNTY
Harrisburg, Arkansas

BRACKETT KRENNERICH architects
100 East Huntington Ave. Suite D P.O. Box 1655 870-932-0571 Fax 870-932-0975 www.bkarchts.com

| Revision Schedule | | | |
|---|---|---|---|
| Tag | Rev. Description | Rev. Date | Issued by |

STATE OF ARKANSAS
REGISTERED PROFESSIONAL ENGINEER
MARK D. STRICKLAND
07/26/2024
MARK D. STRICKLAND, P.E.
ENGINEER LICENSE NO. 11187

Commission Number 2237 (SE 23-232)

E202

July 26, 2024

SECOND FLOOR LIGHTING PLAN

C:\Users\cwright\Documents\WPE24_Poinsett
Location: cwright@strickandengineering.com.rvt
8/2/2024 10:25:55 AM


1 FA101 FIRST FLOOR - FIRE ALARM PLAN
3/16" = 1'-0"

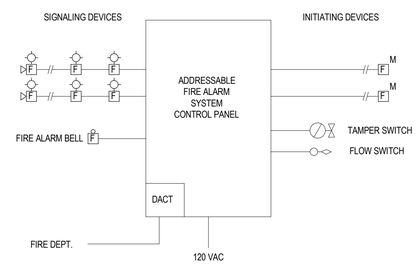


FIRE ALARM RISER DIAGRAM
NOT TO SCALE


STRICKLAND ENGINEERING
CIVIL MECHANICAL ELECTRICAL ENGINEERING
113 West Main Street Jackson, Missouri 63755
Tel: 573-243-4080 Fax: 573-243-2191



POINSETT COUNTY COURT ANNEX
# POINSETT COUNTY
Harrisburg, Arkansas


BRACKETT KRENNERICH architects
100 East Huntington Ave. Suite D P.O. Box 1655
870-932-0571 Fax 870-932-0975
www.bkarchts.com


| Revision Schedule | | | |
|---|---|---|---|
| Tag | Rev. Description | Rev. Date | Issued by |

STATE OF ARKANSAS
REGISTERED PROFESSIONAL ENGINEER
MARK D. STRICKLAND
07/26/2024
MARK D. STRICKLAND, P.E.
ENGINEER LICENSE NO. 11187

Commission Number
2237 (SE 23-232)

FA101

July 26, 2024

FIRST FLOOR FIRE ALARM PLAN

C:\Users\owright\Documents\MPE24_Poinsett
Revit central: bkcentral.bkcentral.com\bkandengineering.com.rvt
8/2/2024 10:25:57 AM

1 FA102 SECOND FLOOR - FIRE ALARM PLAN
3/16" = 1'-0"

C:\Users\owright\Documents\MPE24_Poinsett
Central_owright@strickandengineering.com.rvt
8/2/2024 10:25:59 AM

STRICKLAND ENGINEERING
CIVIL MECHANICAL ELECTRICAL ENGINEERING
113 West Main Street Jackson, Missouri 63755
Tel: 573-243-4080 Fax: 573-243-2191



POINSETT COUNTY COURT ANNEX
# POINSETT COUNTY
Harrisburg, Arkansas

BRACKETT KRENNERICH architects

100 East Huntington Ave. Suite D P.O. Box 1655 870-932-0571 Fax 870-932-0975 www.bkarchts.com

| Revision Schedule | | | |
|---|---|---|---|
| Tag | Rev. Description | Rev. Date | Issued by |

STATE OF ARKANSAS
REGISTERED PROFESSIONAL ENGINEER
MARK DAVID STRICKLAND
07/26/2024
MARK D. STRICKLAND, P.E.
ENGINEER LICENSE NO. 11187

Commission Number
2237 (SE 23-232)

FA102

July 26, 2024

SECOND FLOOR FIRE ALARM PLAN


SECURITY SCOPE OF WORK:
1. BOX AND CONDUIT ROUGH-IN SHALL BE PROVIDED AND INSTALLED BY E.C. EXTERIOR CAMERA ROUGH-IN SHALL INCLUDE BOX WITH CONDUIT THRU WALL TO ABOVE NEAREST INTERIOR ACCESSIBLE CEILING.
2. FINAL EQUIPMENT, CABLING, AND CAMERAS BY POINSETT COUNTY'S PREFERRED SECURITY VENDOR.

1 / SE101 FIRST FLOOR - SECURITY PLAN
3/16" = 1'-0"

POINSETT COUNTY COURT ANNEX
# POINSETT COUNTY
Harrisburg, Arkansas

BRACKETT KRENNERICH architects

100 East Huntington Ave. Suite D P.O. Box 1655 870-932-0571 Fax 870-932-0975 www.bkarchts.com

| Revision Schedule | | | |
|---|---|---|---|
| Tag | Rev. Description | Rev. Date | Issued by |

STATE OF ARKANSAS
REGISTERED PROFESSIONAL ENGINEER
MARK D. STRICKLAND
07/26/2024
MARK D. STRICKLAND, P.E.
ENGINEER LICENSE NO. 11187

Commission Number 2237 (SE 23-232)

SE101

July 26, 2024

FIRST FLOOR SECURITY PLAN

STRICKLAND ENGINEERING
CIVIL MECHANICAL ELECTRICAL ENGINEERING
113 West Main Street Jackson, Missouri 63755
Tel: 573-243-4080 Fax: 573-243-2191



C:\Users\lowright\Documents\WPE24_Poinsett
Location: www.strickandengineering.com.rvt
8/2/2024 10:26:01 AM

SECURITY SCOPE OF WORK:
1. BOX AND CONDUIT ROUGH-IN SHALL BE PROVIDED AND INSTALLED BY E.C. EXTERIOR CAMERA ROUGH-IN SHALL INCLUDE BOX WITH CONDUIT THRU WALL TO ABOVE NEAREST INTERIOR ACCESSIBLE CEILING.
2. FINAL EQUIPMENT, CABLING, AND CAMERAS BY POINSETT COUNTY'S PREFERRED SECURITY VENDOR.

1 / SE102 SECOND FLOOR - SECURITY PLAN
3/16" = 1'-0"

C:\Users\jwright\Documents\MPE24_Poinsett
Autodesk\Revit\strickandengineering.com.rvt
**8/2/2024 10:26:03 AM**

STRICKLAND ENGINEERING
CIVIL MECHANICAL ELECTRICAL ENGINEERING
113 WEST MAIN STREET JACKSON, MISSOURI 63755
TEL: 573-243-4080 FAX: 573-243-2191


POINSETT COUNTY COURT ANNEX
# POINSETT COUNTY
Harrisburg, Arkansas

BRACKETT KRENNERICH architects

| Revision Schedule | | | |
|---|---|---|---|
| Tag | Rev. Description | Rev. Date | Issued by |

STATE OF ARKANSAS
REGISTERED PROFESSIONAL ENGINEER
MARK D. STRICKLAND
11187
07/26/2024
MARK D. STRICKLAND, P.E.
ENGINEER LICENSE NO. 11187

Commission Number
2237 (SE 23-232)

*SE102*

July 26, 2024

100 East Huntington Ave. Suite D P.O. Box 1655 870-932-0571 Fax 870-932-0975 www.bkarchts.com

SECOND FLOOR SECURITY PLAN

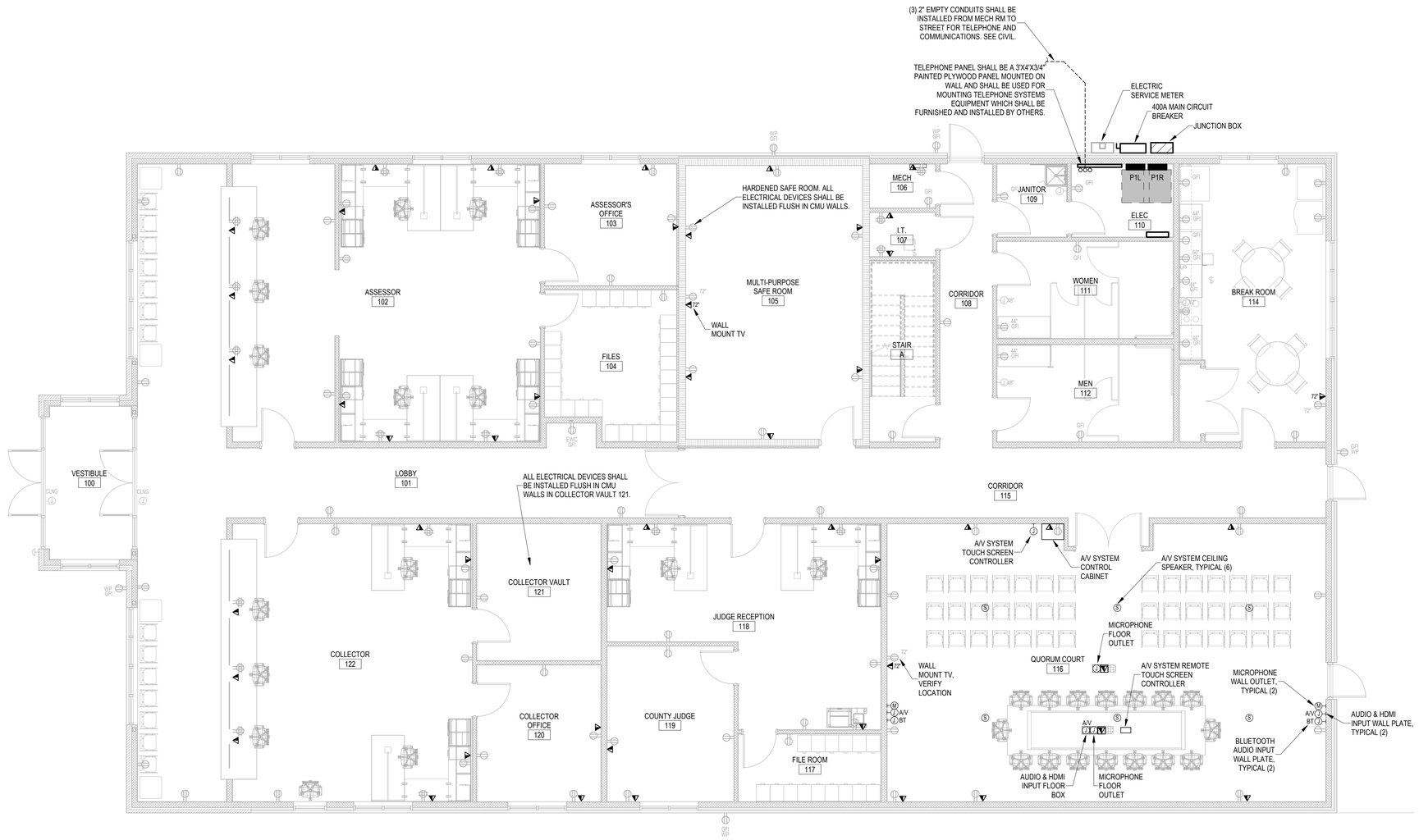


1 / T101 FIRST FLOOR - TELECOM PLAN
3/16" = 1'-0"

A/V SYSTEM SCOPE OF WORK:
THE A/V SYSTEM SUPPLIER SHALL BE AN AUTHORIZED DISTRIBUTOR OF THE EQUIPMENT SUPPLIED, AND SHALL BE AUTHORIZED AND EQUIPPED TO SERVICE THE EQUIPMENT SUPPLIED IN AND OUT OF WARRANTY, FULLY EMPOWERED TO SUPPORT THE MANUFACTURER'S WARRANTY PROGRAM, AND SHALL BE AUTHORIZED AND CERTIFIED TO PROVIDE OWNER TRAINING ON SYSTEM OPERATION AT TIME OF PROJECT TURNOVER.

THE A/V SYSTEM CABINET SHALL INCLUDE ONE (1) MAIN EQUIPMENT CABINET LOCATED IN THE COURT ROOM AS SHOWN ON THE PROJECT DRAWINGS THAT CONTAINS ONE (1) ALLEN & HEATH QU-PAC-32 DIGITAL MIXER, POWER SEQUENCER, WIRELESS ASSISTIVE LISTENING TRANSMITTER W/FOUR (4) ALS RECEIVERS, TWO (2) WIRELESS MICROPHONE RECEIVERS, AND ONE (1) POWER AMPLIFIER. NOTE THAT THE DIGITAL MIXER WILL BE CONNECTED TO A WIRELESS ACCESS POINT FOR CONTROL VIA AN IPAD.

THE A/V SYSTEM SHALL INCLUDE THE FOLLOWING COMPONENTS:
1. ONE (1) STAND MOUNTED CARDIOID CONDENSER GOOSENECK PODIUM MICROPHONE.
2. EIGHT (8) TABLE MOUNTED CARDIOID CONDENSER GOOSENECK MICROPHONES AT COURTROOM TABLE.
3. ONE (1) WIRELESS HANDHELD MICROPHONE TRANSMITTER.
4. THREE (3) HDMI INPUT & 3.5MM AUXIALIARY AUDIO INPUT PLATES.
5. TWO (2) BLUETOOTH AUDIO INPUT PLATES.
6. FOUR (4) 1 GANG MICROPHONE INPUT PLATES WITH TWO (2) MICROPHONE INPUTS EACH.
7. SIX (6) CEILING MOUNTED, 6.5", 2-WAY ELECTROVOICE LOUDSPEAKERS.
8. TWO (2) 10" CEILING MOUNTED ELECTROVOICE SUBWOOFER LOUDSPEAKERS.
9. ONE (1) WALL MOUNTED TV VIDEO OUTLET AND VIDEO DECODER. VERIFY TV EQUIPMENT WITH OWNER.
10. ONE (1) WALL MOUNTED TOUCHSCREEN CONTROL PANEL AND ONE(1) WIRELESS REMOTE TOUCHSCREEN CONTROL PANEL TO CONTROL AUDIO AND VIDEO INPUT SOURCE SELECTION, DIGITAL MIXER SYSTEM SETTINGS, AND SYSTEM VOLUME CONTROL.

IT SCOPE OF WORK:
1. BOX AND CONDUIT ROUGH-IN SHALL BE PROVIDED AND INSTALLED BY E.C. SEE BOX & CONDUIT DETIAL ON SHEET E103.
2. FINAL EQUIPMENT, CABLING, AND COMMUNICATION OUTLETS BY POINSETT COUNTY'S PREFERRED IT VENDOR.

## COMMUNICATIONS GENERAL NOTES

A WIRING DEVICES SHALL BE INSTALLED IN LOCATIONS AS INDICATED ON PLANS. COORDINATE W/ OTHER TRADES BEFORE CONSTRUCTION TO AVOID CONFLICTS IN THE FIELD. IF CONFLICT ARISES, CONTACT THE ENGINEER FOR RESOLUTION.

B ALL DEVICE HEIGHTS LISTED ARE TO THE CENTER OF THE DEVICE UNLESS NOTED OTHERWISE.

C ALL PHONE/DATA OUTLETS SHALL BE INSTALLED AT 18" A.F.F. UNLESS NOTED OTHERWISE.

STRICKLAND ENGINEERING
CIVIL MECHANICAL ELECTRICAL ENGINEERING
113 WEST MAIN STREET JACKSON, MISSOURI 63755
TEL: 573-243-4080 FAX: 573-243-2191


POINSETT COUNTY COURT ANNEX
# POINSETT COUNTY
Harrisburg, Arkansas

BRACKETT KRENNERICH architects
100 East Huntington Ave. Suite D P.O. Box 1655 870-932-0571 Fax 870-932-0975 www.bkarchts.com

Revision Schedule

| Tag | Rev. Description | Rev. Date | Issued by |
|---|---|---|---|

STATE OF ARKANSAS REGISTERED PROFESSIONAL ENGINEER No. 11187 MARK D. STRICKLAND
07/26/2024
MARK D. STRICKLAND, P.E.
ENGINEER LICENSE NO. 11187

Commission Number 2237 (SE 23-232)

T101

July 26, 2024

FIRST FLOOR TELECOM PLAN

C:\Users\vwright\Documents\WPE24_Poinsett
Central_revit@stricklandengineering.com.rvt
8/2/2024 10:26:06 AM