ADDENDUM NO. 1

PROJECT TITLE:	Law Enforcement Training Academy Barracks Black River Technical College Pocahontas, Arkansas
OWNER:	Black River Technical College 1410 Highway 304E Pocahontas, AR 72455
OWNER'S REPRESENTATIVE:	Dr. Eggensperger, President (870) 248-4000
ARCHITECT:	Brackett-Krennerich and Associates P.A. 100 East Huntington Avenue, Suite D Post Office Box 1655 Jonesboro, Arkansas 72403-1655 (870) 932-0571 *office* •(870) 932-0975 *fax*
COMMISSION NUMBER:	2405
DATE OF ISSUE:	September 5, 2024
BID DATE/LOCATION:	September 17, 2024 at 2:00 p.m. C.D.S.T Richard Gaines Technology Center, Room BT113 (The Pocahontas Room) Black River Technical College 1410 Highway 304 East Pocahontas, AR 72455

Contractor shall take note of the following listed revisions and/or additions to the drawings and specifications for the above referenced project and adjust the contract sum accordingly. These revisions are hereby made a part of said documents and subsequent construction as if therein included.

ARCHITECTURAL

1. Specifications: Section 00 2100 – Instructions to Bidders

   A. Section 1.12 Time of Completion / Liquidated Damages; Replace Item A with the following:

   Bidder must agree to commence work within ten (10) days of the date of the "Notice to Proceed" of the owner and to fully complete the project. **All punch list items to be completed by December 1, 2024.**

STRUCTURAL

2. Drawings: Sheet S100 – Note Sheet
   A. Omit in its entirety and replace with page 3 of this addendum.

3. Drawings: Sheet S200 – Foundation Plan
   A. Omit in its entirety and replace with page 4 of this addendum.

4. Drawings: Sheet S201 – Foundation Plan – Lobby
   A. Omit in its entirety and replace with page 5 of this addendum.

5. Drawings: Sheet S300 – Foundation Details
   A. Omit in its entirety and replace with page 6 of this addendum.

6. Drawings: Sheet S301 – Foundation Details
   A. Omit in its entirety and replace with page 7 of this addendum.

7. Drawings: Sheet S400 – Second Floor & Roof Framing Plan
   A. Omit in its entirety and replace with page 8 of this addendum.

8. Drawings: Sheet S500 – Framing Details
   A. Omit in its entirety and replace with page 9 of this addendum.

9. Drawings: Sheet S501 – Framing Details
   A. Omit in its entirety and replace with page 10 of this addendum.

10. Drawings: Sheet S502 – Framing Details
    A. Omit in its entirety and replace with page 11 of this addendum.

11. Drawings: Sheet S503 – Framing Details
    A. Omit in its entirety and replace with page 12 of this addendum.

STRUCTURAL NOTES

GENERAL NOTES

1. THE CONTRACTOR SHALL THOROUGHLY REVIEW ALL CONTRACT DOCUMENTS AND INFORM THE ARCHITECT OF CONFLICTS OR DISCREPANCIES PRIOR TO BIDDING, FABRICATION, AND CONSTRUCTION.
2. IN CASES OF DISCREPANCIES IN DIMENSIONS AND ELEVATIONS BETWEEN STRUCTURAL AND ARCHITECTURAL DRAWINGS, CONTRACTOR SHALL COORDINATE WITH THE ARCHITECT PRIOR TO FABRICATION AND CONSTRUCTION.
3. THE CONTRACTOR SHALL COORDINATE THE FIELD VERIFICATION OF ALL EXISTING SITE CONDITIONS SUCH AS EXISTING FLOOR ELEVATIONS, EXISTING FOOTING ELEVATIONS, EXISTING UTILITIES, ETC. WHETHER NOTED OR NOT IN THE CONTRACT DOCUMENTS AND SHALL NOTIFY THE ARCHITECT OF ANY CONFLICTS, DISCREPANCIES, OR UNKNOWN CONDITIONS PRIOR TO FABRICATION AND CONSTRUCTION.
4. REPRODUCTION OF CONTRACT DRAWINGS, IN ANY FORM, WILL NOT BE ACCEPTED AS SHOP DRAWINGS.
5. REVIEW OF SUBMITTALS AND/OR SHOP DRAWINGS BY THE STRUCTURAL ENGINEER-OF-RECORD DOES NOT RELIEVE THE CONTRACTOR OF THE RESPONSIBILITY TO REVIEW AND CHECK SHOP DRAWINGS FOR ERRORS AND OMISSIONS ASSOCIATED WITH THE PREPARATION OF SHOP DRAWINGS AS THEY PERTAIN TO MEMBER SIZES, DETAILS, AND DIMENSIONS SPECIFIED IN THE CONTRACT DOCUMENTS. CONTRACTOR ALSO SHALL BE RESPONSIBLE FOR ALL MEANS, METHODS, TECHNIQUES, AND PROCEDURES OF CONSTRUCTION.
6. CONTRACTOR SHALL PROVIDE TEMPORARY GUYS AND BRACING AS REQUIRED DURING CONSTRUCTION. STRUCTURE IS NOT STABLE UNTIL ALL STRUCTURAL MEMBERS, CONNECTIONS, AND DECKING ARE IN PLACE.
7. IF SLAB-ON-GRADE CONTROL JOINT LOCATIONS ARE NOT SHOWN ON PLANS, PROVIDE SAWN CONTROL JOINTS AT 15'-0" ON CENTER MAXIMUM SPACING IN A PATTERN THAT WILL REDUCE SLAB-ON-GRADE CRACKS UNLESS NOTED OTHERWISE ON DRAWINGS. COORDINATE LOCATIONS WITH ARCHITECT AND ENGINEER. RAISED SLAB ON METAL DECK SHALL NOT HAVE CONTROL JOINTS.
8. ACI, AISC, AITC, AND AWS SPECIFICATIONS SHALL GOVERN ALL PHASES OF FABRICATION AND CONTRUCTION.

SITE CONSTRUCTION NOTES

SPREAD FOOTINGS

1. ALL UNDERCUTTING, SITE PREPARATION, FILL SELECTION, BACKFILLING AND COMPACTION SHALL BE PERFORMED IN STRICT ACCORDANCE WITH THE SPECIFICATIONS AND SOILS ENGINEER'S RECOMMENDATIONS.
2. BOTTOM OF FOOTING ELEVATIONS (BF) SHOWN ON THE PLANS ARE FOR ESTIMATING PURPOSES ONLY AND ARE NOT NECESSARILY TO BE USED FOR CONSTRUCTION. THE SOILS ENGINEER OR THEIR REPRESENTATIVE SHALL BE ENGAGED TO INSPECT ALL FOOTING EXCAVATIONS TO VERIFY THAT THE REQUIRED ALLOWABLE BEARING CAPACITY IS ATTAINABLE. BOTTOM OF FOOTING ELEVATIONS SHALL BE ADJUSTED PER THE ON-SITE RECOMMENDATIONS OF THE SOILS ENGINEER OR THEIR REPRESENTATIVE.
3. ALL SPREAD FOOTING EXCAVATIONS SHALL BE FOUNDED IN PROPEPLY COMPACTED SELECT FILL OR IN THE NATURAL SOILS WITH AN ALLOWABLE NET BEARING CAPACITY OF AT LEAST 1,500 PSF AND 1,750 PSF FOR CONTINUOUS AND SPREAD FOOTINGS RESPECTIVELY. (REF: GEOTECHNICAL ENGINEERING EXPLORATION, DATED AUGUST 02, 2024 BY MTA ENGINEERS.)
4. MAINTAIN FINISHED GRADE (AND/OR BOTTOM OF FOOTING ELEVATIONS) TO PROVIDE AT LEAST 2'-0" COVER ABOVE THE BOTTOM OF ALL EXTERIOR FOOTINGS.

CONCRETE NOTES

CONCRETE REINFORCEMENT

1. CONCRETE REINFORCEMENT SUPPLIER SHALL SUBMIT SHOP DRAWINGS TO THE ARCHITECT FOR REVIEW PRIOR TO CONSTRUCTION.
2. ALL REINFORCING STEEL SHALL BE ASTM A615, GRADE 60, UNLESS NOTED OTHERWISE. ALL WELDABLE REINFORCING STEEL SHALL BE ASTM A706, GRADE 60.
3. PROVIDE THE FOLLOWING PROTECTIVE COVERING FOR ALL REINFORING BARS UNLESS DETAILED OR NOTED OTHERWISE:

SLAB-ON-GRADE BARS (BOTTOM)	3" CLEAR
BELOW GRADE (CAST AGAINST EARTH)	3" CLEAR
BELOW GRADE (FORM EDGE)	2" CLEAR
ELEVATED SLABS	3" CLEAR

4. DO NOT CUT TIES OR CONTINUOUS BARS TO PROVIDE CLEARANCE FOR EMBEDDED ITEMS OR OTHER OBSTRUCTIONS. INDIVIDUAL BARS AND TIES MAY BE MOVED VERTICALLY UP TO 1.5" AS REQUIRED TO PROVIDE CLEARANCE FOR EMBEDS, HOOKS, ETC. DO NOT HEAT REINFORCING TO BEND IT.
5. IF DOWELS OR VERTICAL REINFORCING ARE CUT OR SEVERELY BENT, CONTRACTOR MAY BE REQUIRED TO REMOVE THE CONCRETE BACK TO THE PREVIOUS POUR JOINT AND REPLACE THE DAMAGED BARS AND CONCRETE AT THE CONTRACTOR'S EXPENSE.
6. REINFORCEMENT SHALL BE SPLICED ONLY AS SHOWN OR NOTED IN THE STRUCTURAL CONTRACT DOCUMENTS. SPLICES AT OTHER LOCATIONS SHALL BE APPROVED IN WRITING BY THE STRUCTURAL ENGINEER-OF-RECORD PRIOR TO FABRICATION.
7. REINFORCING BARS MARKED AS CONTINUOUS SHALL BE SPLICED WITH CLASS "B" TENSION LAP SPLICES ONLY.

SIZE	3000 PSI CLASS B		4000 PSI CLASS B	
	TOP	OTHER	TOP	OTHER
#3	2'-4"	1'-10"	2'-0"	1'-7"
#4	3'-1"	2'-5"	2'-8"	2'-1"
#5	3'-11"	3'-0"	3'-4"	2'-7"
#6	4'-8"	3'-7"	4'-0"	3'-1"

8. ALL TENSION LAP SPLICES SHALL BE CLASS "B" UNLESS NOTED OTHERWISE.
9. WELDED WIRE REINFORCEMENT SHALL CONFORM TO ASTM A185. LAP REINFORCEMENT 8" ON SIDES AND ENDS. MAINTAIN WIRE 1 TO 2 INCHES BELOW TOP SURFACE OF SLAB-ON-GRADE, UNLESS NOTED OTHERWISE. WELDED WIRE REINFORCEMENT MUST BE PLACED ON CHAIRS OR BOLSTERS AS REQUIRED TO MAINTAIN POSITION IN THE SLAB.
10. ALL REINFORCEMENT SHALL BE PLACED ON CHAIRS, BOLSTERS, AND/OR CONCRETE MASONRY UNITS AS REQUIRED TO MAINTAIN POSITION. NO CLAY MASONRY UNITS WILL BE ACCEPTED FOR THIS APPLICATION.
11. ONCE SHOP DRAWINGS HAVE BEEN REVIEWED, DO NOT ADD REINFORCING OR INFORMATION TO PREVIOUSLY SUBMITTED SHEETS FOR SUBSEQUENT SUBMITTALS UNLESS SHOP DRAWINGS ARE BEING RESUBMITTED AFTER BEING RETURNED "NOT REVIEWED".
12. WHERE ANCHOR RODS ARE CAST INTO CONCRETE, PROVIDE SUPPLEMENTAL REINFORCING EACH WAY, TIED NEAR THE TOP AND BOTTOM OF ALL ANCHOR RODS TO THE ADJACENT REBAR TO SECURE RODS DURING CONCRETE PLACEMENT (MINIMUM SIZE #4).
13. IF IT IS NECESSARY FOR PLUMBING TO PASS THROUGH FOOTINGS, PLACE IN PIPE PENETRATION SLEEVE. DO NOT PLACE PLUMBING PARALLEL TO AND INSIDE OF FOOTING.
14. IF IT IS NECESSARY FOR PLUMBING TO PASS THROUGH GRADE BEAMS HORIZONTALLY, LOCATE IN MIDDLE 1/3 OF BEAM AND PLACE IN PIPE PENETRATION SLEEVE. DO NOT PENETRATE BEAM VERTICALLY.

CAST-IN-PLACE CONCRETE

1. CONCRETE SUPPLIER SHALL SUBMIT CONCRETE MIX DESIGN DATA TO THE ARCHITECT FOR REVIEW PRIOR TO CONSTRUCTION.
2. CONCRETE SHALL HAVE AT LEAST THE FOLLOWING MINIMUM COMPRESSIVE STRENGTHS AT 28 DAYS:

A.	FOOTINGS AND GRADE BEAMS	3000 PSI
B.	REINFORCED CMU AND BOND BEAM FILL	(SEE MASONRY NOTES)
C.	SLAB-ON-GRADE, PEDESTALS, WALLS, AND PILASTERS	4000 PSI
D.	ELEVATED SLABS, AND BEAMS	4000 PSI
E.	STAIR LANDINGS, & STAIR TREADS	3000 PSI

3. MIX DESIGN SHALL INCLUDE AT LEAST THE FOLLOWING AMOUNTS OF PORTLAND CEMENT MEETING ASTM C150 OR D595 PER CUBIC YARD OF CONCRETE.

28 DAY COMPRESSIVE STRENGTH	NON-AIR ENTRAINED		AIR ENTRAINED		SLUMP	AGGREGATE TYPE
	MIN. CEMENT CONTENT (LBS./YD^3)	MAXIMUM PERMISSIBLE W/C RATIO	MIN. CEMENT CONTENT (LBS./YD^3)	MAXIMUM PERMISSIBLE W/C RATIO		
3000 PSI	470	0.53	517	0.46	6"	REGULAR ROCK
4000 PSI	564	0.44	611	0.40	6"	LIMESTONE

4. PROPORTIONS OF CONCRETE MIX DESIGNS SHALL BE DETERMINED BY THE PROCEDURES ESTABLISHED IN THE CURRENT VERSION OF ACI.
5. MIX DESIGN MAY INCLUDE (TYPE C) FLYASH AS A REPLACEMENT FOR PORTLAND CEMENT UP TO A MAXIMUM OF 20% OF THE TOTAL CEMENTITIOUS MATERIAL. DO NOT USE A FLYASH CONTAINING CONCRETE MIX WHEN THE TEMPERATURE DURING PLACEMENT OR CURING IS PROJECTED TO FALL BELOW 60° FAHRENHEIT.
6. MIX DESIGN MAY INCLUDE WATER REDUCING ADMIXTURES CONFORMING TO ASTM C494, TYPE A, TO PROVIDE WORKABILITY AND SPECIFIED SLUMP WITHOUT EXCEEDING SPECIFIED WATER/CEMENT RATIOS.
7. ALL CONCRETE EXPOSED TO WEATHER SHALL CONTAIN 5.5% AIR ENTRAINMENT (±1.5%). DO NOT EXCEED 3% AIR CONTENT IN CONCRETE RECEIVING A STEEL TROWEL FINISH.

MASONRY NOTES

1. ALL CONCRETE MASONRY UNITS (CMU) SHALL COMPLY WITH ASTM C90, GRADE N, TYPE I. STANDARD WEIGHT UNITS SHALL BE USED BELOW FINISHED FLOOR OR BELOW FINISHED GRADE (OR BELOW FINISHED FLOOR FOR STEM WALLS WITH SLAB ABOVE) AND LIGHTWEIGHT UNITS SHALL BE USED ABOVE GRADE. SIZES SHALL BE AS INDICATED ON THE CONTRACT DRAWINGS.
2. TYPE M MORTAR SHALL BE USED BELOW GRADE AND TYPE S MORTAR SHALL BE USED ABOVE GRADE WITH AN ALLOWABLE COMPRESSIVE STRENGTH OF AT LEAST 2500 PSI FOR TYPE M AND 1800 PSI FOR TYPE S. MIX MORTAR WITH TYPE I PORTLAND CEMENT (TYPE III MAY BE USED FOR COLD WEATHER CONSTRUCTION), HYDRATED LIME MEETING ASTM C207 AND AGGREGATE MEETING ASTM C144.
3. FILL ALL BOND BEAMS, ALL CMU CELLS WITH VERTICAL REINFORCING OR EXPANSION BOLTS, AND ALL CELLS BELOW GRADE WITH 3000 PSI GROUT MEETING THE FOLLOWING REQUIREMENTS:
   - A. USE A MINIMUM OF 5.5 BAGS OF PORTLAND CEMENT PER CUBIC YARD.
   - B. MAXIMUM WATER/CEMENT RATIO BY WEIGHT SHALL BE 0.54.
   - C. WATER-REDUCING ADMIXTURE MEETING ASTM C494 SHALL BE USED TO PROVIDE SUFFICIENT FLOWABILITY TO READILY FILL CELLS WITH A REASONABLE AMOUNT OF RODDING. ADDITIONAL WATER WILL NOT BE ALLOWED AFTER INITIAL MIXING.
   - D. AGGREGATE SHALL BE WELL GRADED WITH A MAXIMUM SIZE OF 3/8".
   - E. ALTERNATE MIX DESIGNS WILL BE CONSIDERED IF SUBMITTED TO THE ARCHITECT FOR APPROVAL AFTER CONTRACT IS AWARDED. ALTERNATE DESIGNS MUST SHOW SUFFICIENT FLOWABILITY CHARACTERISTICS AND A 28-DAY COMPRESSIVE STRENGTH OF AT LEAST 3000 PSI.
4. MAXIMUM HEIGHT OF ALL GROUT FILL SHALL NOT EXCEED 4'-0" UNLESS A CLEANOUT AND INSPECTION HOLE IS PROVIDED AT THE BOTTOM OF THE POUR.
5. ALL CMU SHALL BE REINFORCED WITH #5 VERTICALS AND DOWELS AT 4'-0" ON CENTER UNLESS SPECIFICALLY NOTED OTHERWISE OR NOTED AS UNREINFORCED MASONRY ON THE PLANS. WHERE SPLICES ARE REQUIRED, USE A LAP LENGTH OF AT LEAST 28 INCHES.
6. ALL VERTICAL CORNERS, VERTICAL END CELLS, AND ONE CELL EACH SIDE OF ALL OPENINGS SHALL BE GROUTED AND REINFORCED WITH (1)#5 UNLESS NOTED OTHERWISE.
7. HORIZONTAL BOND BEAMS WITH (2)#5 CONTINUOUS SHALL BE PROVIDED AT THE TOP AND BOTTOM OF ALL OPENINGS, AT STRUCTURALLY CONNECTED ROOF AND FLOOR LEVELS, AT THE TOP OF ALL PARAPETS OR WALLS, AND AS SPECIFICALLY SHOWN ON THE CONTRACT DRAWINGS. BOND BEAMS ABOVE AND BELOW OPENINGS SHALL EXTEND AT LEAST 2'-0" BEYOND THE OPENING UNLESS NOTED OTHERWISE.
8. WHERE VERTICAL REINFORCING AND HORIZONTAL REINFORCING INTERSECT, ALL REINFORCING SHALL RUN CONTINUOUS.
9. HORIZONTAL REINFORCING SHALL BE CONTINUOUS AT CORNERS WITH 90° BENDS OR CORNER BARS WITH EACH LEG EQUAL TO THE REQUIRED LAP LENGTH. (SEE TYPICAL CORNER BAR DETAIL.)
10. ALL CMU SHALL HAVE 9 GAUGE TRUSS TYPE JOINT REINFORCEMENT AT 16" ON CENTER VERTICALLY ABOVE GRADE AND 8" ON CENTER VERTICALLY BELOW GRADE UNLESS NOTED OTHERWISE (LADDER TYPE JOINT REINFORCEMENT SHALL NOT BE ALLOWED).
11. BOND BEAMS WITH (2)#5 CONTINUOUS HORIZONTAL BARS SHALL BE PLACED AT A MAXIMUM SPACING OF 4'-0" ON CENTER VERTICALLY TO PROVIDE THE HORIZONTAL REINFORCING REQUIRED BY THE BUILDING CODE.

LINTEL SCHEDULE

WALL TYPE	UP TO 4'-0" OPENING	4'-1" TO 6'-4" OPENING	6'-5" TO 8'-4" OPENING	8'-5" TO 12'-0" OPENING
4" VENEER	L5x3-1/2x5/16(LLV)	L7x4x3/8 (LLV)	L7x4x3/8 (LLV)	L7x4x3/8(LLV)
8" BLOCK	8"x8" LINTEL BLK. w/ (2)#5	8"x16" LINTEL BLK. w/ (2)#5 (NOTE #6)	8x16 LINTEL BLK. w/ (2)#6 (NOTE #6)	8x16 LINTEL BLK. w/ (2)#6 (NOTE #6)

1. LINTEL SCHEDULE APPLIES UNLESS NOTED OR DETAILED OTHERWISE
2. 8" BEARING @ EA END, MINIMUM
3. USE 3,000PSI CONCRETE IN LINTEL BLOCKS
4. FILL CELLS BELOW LINTEL BEARING w/ CONCRETE FULL HEIGHT. PROVIDE (1)#4 VERTICAL BAR IN EA CELL.
5. FOR OPENINGS LARGER THAN SHOWN ON LINTEL SCHEDULE ABOVE, PROVIDE 50LBS/FT STRUCTURAL STEEL. VERIFY EXACT SIZE w/ STRUCTURAL ENGINEER.
6. AT 16" HIGH BOND BEAMS USE THE FOLLOWING ADDITIONAL BARS

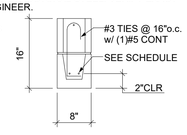

METAL NOTES

STRUCTURAL STEEL FRAMING

1. STRUCTURAL STEEL SUPPLIER SHALL SUBMIT SHOP DRAWINGS TO THE ARCHITECT FOR REVIEW PRIOR TO FABRICATION.
2. ALL STRUCTURAL STEEL SHAPES SHALL BE AS FOLLOWS:
   - A. ALL WIDE FLANGE STRUCTURAL STEEL SHAPES SHALL BE ASTM A992.
   - B. SQUARE OR RECTANGULAR HOLLOW STRUCTURAL SECTIONS SHALL BE ASTM A500, GRADE C, Fy = 50 KSI.
   - C. ROUND HOLLOW STRUCTURAL SECTIONS SHALL BE ASTM A500, GRADE B, Fy = 42 KSI.
   - D. ROUND STEEL PIPES SHALL BE ASTM A53, GRADE B, Fy = 35 KSI.
   - E. ALL OTHER STRUCTURAL STEEL (CHANNELS, ANGLES, PLATES, ETC.) SHALL BE ASTM A36.
3. ALL ANCHOR RODS SHALL BE ASTM F1554, GRADE 36 UNLESS NOTED OTHERWISE.
4. STRUCTURAL BOLTS SHALL BE ASTM A325-N UNLESS NOTED OTHERWISE.
5. BOLTS THRU WOOD BLOCKING SHALL BE ASTM A307. ALL BOLTS IN CONTACT WITH TREATED WOOD SHALL BE STAINLESS STEEL (TYPE 316L), OR HOT DIPPED GALVANIZED WITH A MINIMUM COATING THICKNESS OF 0.2 OUNCES PER SQUARE FOOT (ASTM A153). USE STAINLESS BOLTS WITH STAINLESS STEEL CONNECTORS AND GALVANIZED BOLTS WITH GALVANIZED CONNECTORS IF ONLY ONE IS SPECIFIED.
6. POST-INSTALLED ADHESIVE ANCHORS SHALL BE STANDARD HAS-E CARBON STEEL ANCHORS (OR APPROVED EQUAL) WITH A MINIMUM STEEL YIELD STRENGTH OF FY=58 KSI OR ASTM F593 STAINLESS STEEL ANCHORS WITH A MINIMUM STEEL YIELD STRENGTH OF FY=45 KSI, UNLESS SHOWN OTHERWISE ON THE DRAWINGS. ADHESIVE SHALL BE SIMPSON STRONG TIE 'SET-3G' EPOXY SYSTEM (OR APPROVED EQUAL) IN CONCRETE OR FILLED CMU CELLS AND SIMPSON STRONG TIE 'AT' EPOXY SYSTEM (OR APPROVED EQUAL) IN HOLLOW CMU OR CLAY MASONRY.
7. CONNECTIONS SHALL BE DESIGNED CONSIDERING BOLT THREADS INCLUDED IN THE SHEAR PLANE (A325-N). ALL BOLTING SHALL BE INSTALLED BY THE TURN-OF-THE-NUT METHOD, CALIBRATED WRENCH, TWIST-OFF-TYPE TENSION-CONTROL BOLTS THAT MEET THE REQUIREMENTS OF ASTM F1852 OR F2280, OR DIRECT-TENSION-INDICATOR DEVICES THAT MEET THE REQUIREMENTS OF ASTM F959. SNUG TIGHT BOLTING WILL NOT BE PERMITTED UNLESS SPECIFICALLY DETAILED ON CONTRACT DRAWINGS.
8. ALL BOLTED CONNECTIONS (EXCEPT COMPOSITE FLOOR BEAM CONNECTIONS) SHALL BE BEARING TYPE SELECTED TO SUPPORT ONE-HALF (1/2) OF THE TOTAL UNIFORM LOAD CAPACITY OF THE BEAMS AS SHOWN IN THE TABLES OF UNIFORM LOAD CONSTANTS, PART 2 OF THE AISC MANUAL, 8TH EDITION, FOR THE GIVEN BEAM SIZE, SPAN, AND GRADE OF STEEL SPECIFIED. THE EFFECTS OF ANY CONCENTRATED LOADS MUST BE TAKEN INTO ACCOUNT. CONNECTIONS SHALL BE DESIGNED CONSIDERING THREADS INCLUDED IN THE SHEAR PLANE (A325-N).
9. ALL WELDS SHALL BE E70XX, MINIMUM, AND SHALL BE PERFORMED BY A WELDER CERTIFIED BY AN AWS CERTIFIED INSPECTOR OR EDUCATOR WHILE WORKING FOR CURRENT EMPLOYER.
10. DO NOT PRIME PAINT STEEL THAT RECEIVES SPRAYED FIREPROOFING.
11. ALL STEEL LINTELS AND SHELF ANGLES SHALL BE COATED WITH A ZINC RICH PRIMER.
12. ALL STRUCTURAL STEEL EXPOSED TO WEATHER (SUCH AS MECHANICAL FRAMES) SHALL BE HOT DIPPED GALVANIZED AFTER FABRICATION.

METAL DECKING

1. METAL DECKING SUPPLIER SHALL SUBMIT SHOP DRAWINGS PREPARED UNDER THE DIRECT SUPERVISION OF A PROFESSIONAL ENGINEER REGISTERED IN THE STATE IN WHICH THE PROJECT IS LOCATED TO THE ARCHITECT FOR REVIEW PRIOR TO FABRICATION.
2. SECOND FLOOR DECKING SHALL BE 3VLI20 GALVANIZED COMPOSITE FLOOR LONG SPAN DECK ATTACHED TO THE STRUCTURE WITH 5/8" DIAMETER PUDDLE WELDS AT 12" ON CENTER AT ALL SUPPORTS. SHEAR STUD WELDING ATTACHMENT MAY REPLACE PUDDLE WELDS WHERE STUD SPACING IS EQUAL TO OR LESS THAN 12" ON CENTER.
3. FLOOR DECKING AT STAIR LANDINGS SHALL BE 0.6C26 GALVANIZED CENTERING DECK ATTACHED TO THE STRUCTURE WITH 5/8" DIAMETER PUDDLE WELDS IN A 30/4 PATTERN AT ALL SUPPORTS AND (4)#10 TEK SCREW SIDELAP FASTENERS BETWEEN SUPPORTS.
4. ROOF DECKING SHALL BE 1.5B20 PAINTED ROOF DECK ATTACHED TO THE STRUCTURE WITH #10 TEK SCREW IN A 36/4 PATTERN AT ALL SUPPORTS AND (4)#10 TEK SCREW SIDELAP FASTENERS BETWEEN SUPPORTS U.N.O ON PLAN.

COLD-FORMED METAL FRAMING

1. COLD-FORMED METAL FRAMING SUPPLIER SHALL SUBMIT SHOP DRAWINGS TO THE ARCHITECT FOR REVIEW PRIOR TO FABRICATION.
2. SHOP DRAWINGS SHALL DETAIL A COMPLETE SYSTEM SHOWING MEMBER SIZES, SPACING, AND CONNECTIONS TO THE STRUCTURE.
3. ALL STRUCTURAL STUDS, TRACK, BRIDGING, END CLOSURES, AND ACCESSORIES SHALL BE FORMED FROM STEEL CONFORMING TO THE REQUIREMENTS OF ASTM A653/A653M.
4. ALL COLD-FORMED STEEL STUD SECTIONS ARE IDENTIFIED ACCORDING TO THE DESIGNATIONS GIVEN IN THE STEEL STUD MANUFACTURERS ASSOCIATION (SSMA) PRODUCT TECHNICAL INFORMATION MANUAL. SEE SSMA FOR MINIMUM SECTION PROPERTIES.

   EXAMPLE: 600S162-43

   600 = MEMBER DEPTH (600 x 1/100 INCHES = 6")
   S = STYLE (S=STUD, T=TRACK, U=CHANNEL)
   162 = FLANGE WIDTH (162 x 1/100 INCHES = 1.625" = 1-5/8")
   43 = MATERIAL THICKNESS (43 = 43MILS x 1/1000 INCHES = 0.043")

MILS	GAUGE
33	20
43	18
54	16
68	14
97	12

   YIELD STRENGTH SHALL BE 33 KSI UNLESS NOTED ON PLANS AS FOLLOWS:
   600S162-43 (50 KSI) - FOR 50KSI YIELD STRENGTH.
5. SEE SPECIFICATIONS FOR ADDITIONAL INFORMATION.
6. PROVIDE COLUMNS BUILT-UP OF MULTIPLE STUDS (2 STUDS MIN.) FOR HEADER AND BEAM BEARING.
7. ALL STUDS AT LOAD BEARING WALLS SHALL BE CUT FULL LENGTH WITH TRACKS (TOP AND BOTTOM) INSTALLED TIGHT AGAINST ENDS OF STUD. NO GAPS BETWEEN END OF STUDS AND TRACK WILL BE ALLOWED IN LOAD BEARING STUDS.
8. ALL COLD-FORMED STEEL FRAMING SHAPES (SUCH AS Z-PURLINS, C-PURLINS, HAT CHANNELS, AND EAVE STRUTS) ARE IDENTIFIED ACCORDING TO THE DESIGNATIONS GIVEN IN THE LIGHT-GAGE STEEL INSTITUTE (LGSI) "LIGHT-GAGE STRUCTURAL STEEL FRAMING SYSTEM DESIGN HANDBOOK". SEE LGSI FOR MINIMUM SECTION PROPERTIES.

PRE-ENGINEERED LIGHT GAUGE METAL TRUSSES

1. TRUSS FABRICATOR SHALL SUBMIT CALCULATIONS AND SHOP DRAWINGS SEALED AND SIGNED BY A PROFESSIONAL ENGINEER REGISTERED IN THE STATE IN WHICH THE PROJECT IS LOCATED TO THE ARCHITECT FOR REVIEW PRIOR TO FABRICATION.
2. TRUSS DIMENSIONS AND LAYOUT, IF SHOWN, ARE FOR ESTIMATING PURPOSES ONLY AND ARE NOT NECESSARILY TO BE USED FOR FABRICATION. FABRICATOR SHALL BE RESPONSIBLE FOR ACTUAL DIMENSIONS OF TRUSSES. TRUSSES SHALL UTILIZE ONLY THE BEARING WALLS AND SUPPORTS SHOWN ON THE CONSTRUCTION DOCUMENTS.
3. CONTRACTOR SHALL PROVIDE BRACING FOR TRUSS CHORDS AND WEB MEMBERS AS REQUIRED BY THE TRUSS FABRICATOR. SYSTEM IS NOT STABLE UNTIL SHEATHING AND PERMANENT BRACING ARE INSTALLED.
4. TRUSS MANUFACTURER SHALL DESIGN AND PROVIDE TRUSS HANGERS WHERE TRUSSES ARE SUPPORTED BY OTHER TRUSSES.
5. TRUSS MANUFACTURER SHALL COORDINATE ALL HAT CHANNELS AND ATTACHMENT TO TOP AND BOTTOM CHORD OF TRUSS. ADDITIONAL TRUSSES SHALL BE ADDED IF HAT CHANNELS CANNOT CARRY ROOF LOADS OR CEILING LOADS AT TRUSS SPACING SHOWN ON THE CONSTRUCTION DOCUMENTS. HAT CHANNEL DEFLECTION ON ROOF AND CEILING SHALL BE LIMITED TO 1/240 TOTAL LOAD AND 1/360 LIVE LOAD.
6. TRUSS MANUFACTURER SHALL DESIGN AND COORDINATE A COMPLETE ROOF SYSTEM INCLUDING ALL TRUSSES, HEADERS, CONNECTIONS AND HAT CHANNELS (IF APPLICABLE), ETC.

DESIGN LOADS:

DEAD LOADS:	WEIGHT OF THE STRUCTURE
ROOF LIVE LOAD:	20 PSF
FLOOR LIVE LOADS:	
SLEEPING ROOMS	40 PSF
CORRIDORS	80 PSF
LOBBIES	100 PSF
ASSEMBLY AREAS	100 PSF
STAIRS AND EXITS	100 PSF
GROUND SNOW LOAD:	10 PSF
BASIC WIND SPEED	Vult: 106 MPH Vasd: 82 MPH
WIND RISK CATEGORY:	II
WIND EXPOSURE:	C
INTERNAL PRESSURE COEFFICIENT:	0.18
COMP. & CLADDING WIND PRESSURE:	SEE ASCE 7-16, Ch. 30
SEISMIC IMPORTANCE FACTOR	I: 1
SEISMIC RISK CATEGORY:	II
MAPPED SPECTRAL RESPONSE ACCELERATIONS:	Ss: 0.75 S1 0.27
SPECTRAL RESPONSE COEFFICIENTS:	Sds: 0.60 Sd1: 0.37
SITE CLASS:	D
SEISMIC DESIGN CATEGORY:	D
BASIC SEISMIC-FORCE RESISTING SYSTEM:	BEARING WALL SYSTEM SPECIAL REINFORCED MASONRY SHEAR WALLS
DESIGN BASE SHEAR:	0.12W
SEISMIC RESPONSE COEFFICIENT:	Cs: 0.12
RESPONSE MODIFICATION FACTOR:	R: 5
ANALYSIS PROCEDURE:	EQUIV. LATERAL FORCE (ASCE 7-16, SEC 12.8)
CODES:	2021 ARKANSAS FIRE PREVENTION CODE A.C.A. 12-80-101 ET. SEQ. (ARKANSAS STATE LAW)

THE FOUNDATIONS AND STRUCTURAL FRAMING HAVE BEEN DESIGNED TO RESIST THE LOADS AND FORCES STATED ABOVE IN ACCORDANCE WITH THE REQUIREMENTS OF THE 2021 ARKANSAS FIRE PREVENTION CODE AND A.C.A. 12-80-101 ET. SEQ.

PRE-ENGINEERED LIGHT GAUGE ROOF TRUSS DESIGN LOADS:

DEAD LOAD:	6 PSF (TOP CHORD) 4 PSF (BOTTOM CHORD)
COLLATERAL LOAD:	4 PSF (TOP CHORD) 6 PSF (BOTTOM CHORD)
LIVE LOAD:	20 PSF (NON-REDUCIBLE) TOP CHORD 5 PSF (NON-REDUCIBLE) BOTTOM CHORD
WIND LOAD:	(SEE DESIGN LOADS ABOVE) DO NOT USE COLLATERAL LOAD IN COMBINATION WITH WIND LOAD.
SNOW LOAD:	(SEE DESIGN LOADS ABOVE)
SEISMIC LOAD:	(SEE DESIGN LOADS ABOVE) DO NOT USE COLLATERAL LOAD IN COMBINATION WITH WIND LOAD.
CODES:	2021 ARKANSAS FIRE PREVENTION CODE A.C.A. 12-80-101 ET. SEQ. (ARKANSAS STATE LAW)

STATE OF ARKANSAS
8-23-24
PROFESSIONAL ENGINEER
No. 12374
CHAD E. FOWLER

CERTIFICATE OF AUTHORITY
FOWLER ENGINEERING, LLC
No. 1759
ARKANSAS ENGINEER

FOWLER ENGINEERING, LLC
STRUCTURAL ENGINEERING CONSULTANTS
1989 Oak Tree Cove, Suite A
HERNANDO, MS 38632
662.469.9571

BRTC
LAW ENFORCEMENT TRAINING ACADEMY BARRACKS
BLACK RIVER TECHNICAL COLLEGE
Pocahontas, Arkansas
BRACKETT KRENNERICH
architects
100 East Huntington Ave. Suite D P.O. Box 1655 870-932-0571 Fax 870-932-0975 www.bkarchts.com

Revision Schedule			
Tag	Rev. Description	Rev. Date	Issued by

THIS IS A PRELIMINARY DRAWING NOT TO BE USED FOR ESTIMATING OR BIDDING PURPOSES. ARCHITECTS ASSUME NO LIABILITY WHATSOEVER FOR THE USE OF THIS DRAWING BY HEREIN NAMED OWNER, HIS AGENTS, OR ANY UNAUTHORIZED PERSON, FIRM, OR CORPORATION FOR CONSTRUCTION PURPOSES.

Commission Number 2405

S100

Date: August 23, 2024

NOTE SHEET

TYP STAIR LANDING CONSTRUCTION

3" CONCRETE SLAB w/ 6x6-W2.9xW2.9 W.W.F. ON 0.6C GALV. STEEL FLOOR DECK. SEE S100 FOR GAUGE AND ATTACHMENT (TYPICAL AT ALL STAIR LANDINGS).

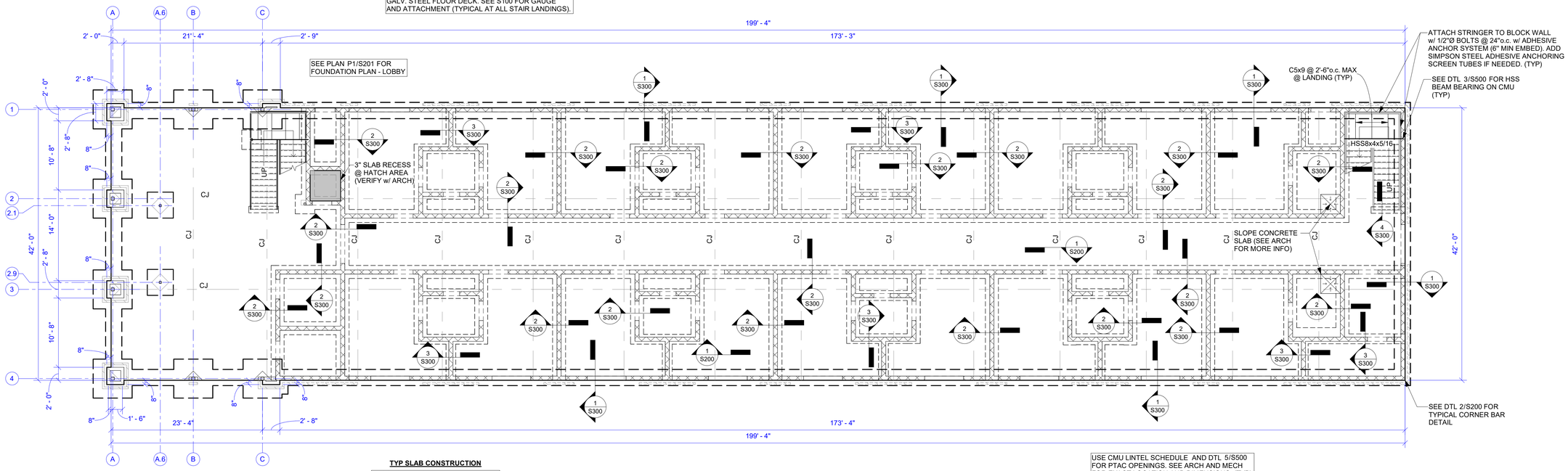

TYP SLAB CONSTRUCTION

4" CONCRETE SLAB w/ 6x6-W2.9xW2.9 W.W.F. ON VAPOR BARRIER (SEE ARCH/SPECS) OVER GRANULAR FILL AS SPECIFIED/RECOMMENDED BY GEOTECH. ENGINEER.

FIN. FLR. ELEV. = (SEE CIVIL) (0'-0")

USE CMU LINTEL SCHEDULE AND DTL 5/S500 FOR PTAC OPENINGS. SEE ARCH AND MECH FOR EXACT LOCATION AND DIMENSIONS. (TYP)

P1 FOUNDATION PLAN
1/8" = 1'-0"

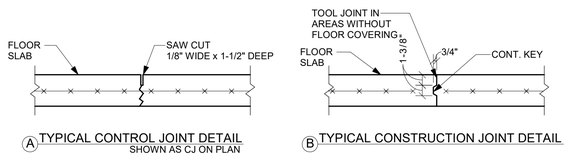

A TYPICAL CONTROL JOINT DETAIL
SHOWN AS CJ ON PLAN

B TYPICAL CONSTRUCTION JOINT DETAIL

CONTRACTOR:
CONTRACTOR IS RESPONSIBLE FOR JOINTS CRACKING AS SHOWN ON PLAN AND DETAIL. SAWING JOINTS SHALL BEGIN AS SOON AS THE SURFACE IS FIRM ENOUGH SO THAT IT WILL NOT BE TORN OR DAMAGED BY THE BLADE. SLABS MUST BE SAWN ON SAME DAY SLAB IS POURED. DO NOT ALLOW SLAB TO CURE OVERNIGHT BEFORE SAWING.

1 TYP CONTROL JOINT DETAIL
NTS

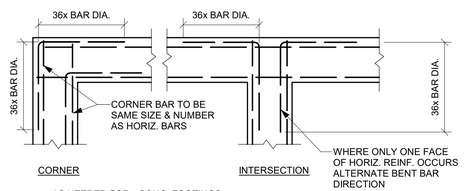

AS NEEDED FOR: CONC. FOOTINGS
THICKENED SLABS
CONC. FILLED BOND BEAMS
CONC. WALLS

2 TYPICAL CORNER BAR PLAN DETAIL
NTS

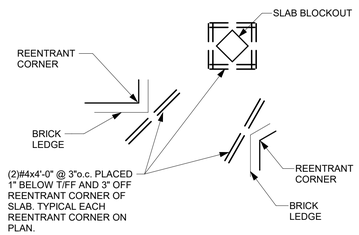

3 TYP REENTRANT CORNER BARS
NTS

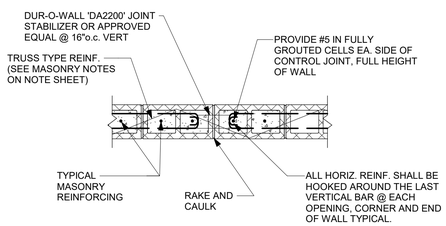

4 MASONRY CONTROL JOINT
NTS

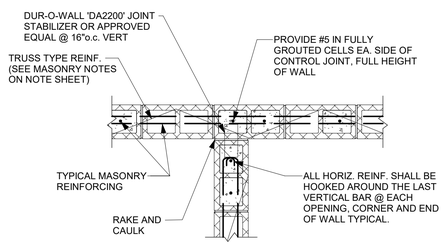

5 MASONRY CONTROL JOINT @ INTERSECTION
NTS

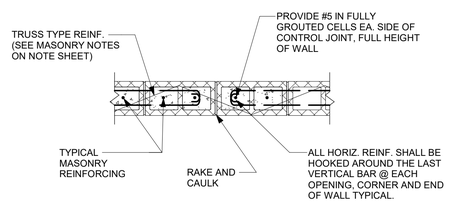

6 MASONRY WALL EXPANSION JOINT
NTS

BRTC

LAW ENFORCEMENT TRAINING ACADEMY BARRACKS
BLACK RIVER TECHNICAL COLLEGE
Pocahontas, Arkansas

STATE OF ARKANSAS
8-23-24
ARCHITECTURAL ENGINEER
No. 12374
CHAD FOWLER

FOWLER ENGINEERING, LLC
CERTIFICATE OF AUTHORIZATION
No. 1759
ARKANSAS ENGINEER

FOWLER ENGINEERING, LLC
STRUCTURAL ENGINEERING CONSULTANTS
1989 Oak Tree Cove, Suite A
HERNANDO, MS 38632
662.469.9571

BRACKETT KRENNERICH architects
100 East Huntington Ave. Suite D P.O. Box 1655
870-932-0571 Fax 870-932-0975
www.bkarchts.com

Revision Schedule			
Tag	Rev. Description	Rev. Date	Issued by

THIS IS A PRELIMINARY DRAWING NOT TO BE USED FOR ESTIMATING OR BIDDING PURPOSES. ARCHITECTS ASSUME NO LIABILITY WHATSOEVER FOR THE USE OF THIS DRAWING BY HEREIN NAMED OWNER, HIS AGENTS, OR ANY UNAUTHORIZED PERSON, FIRM, OR CORPORATION FOR CONSTRUCTION PURPOSES.

Commission Number 2405

S200

Date: August 23, 2024

FOUNDATION PLAN

\\TE-CLOUD\Fedrawings\LTE DRAWINGS (2024)\24-060 BLACK RIVER TECHNICAL COLLEGE LAW ENFORCEMENT TRAINING BARRACKS (R24)\BLACK RIVER TECH 9/5/2024 2:16:29 PM\ Layout: S200 Model: rvt

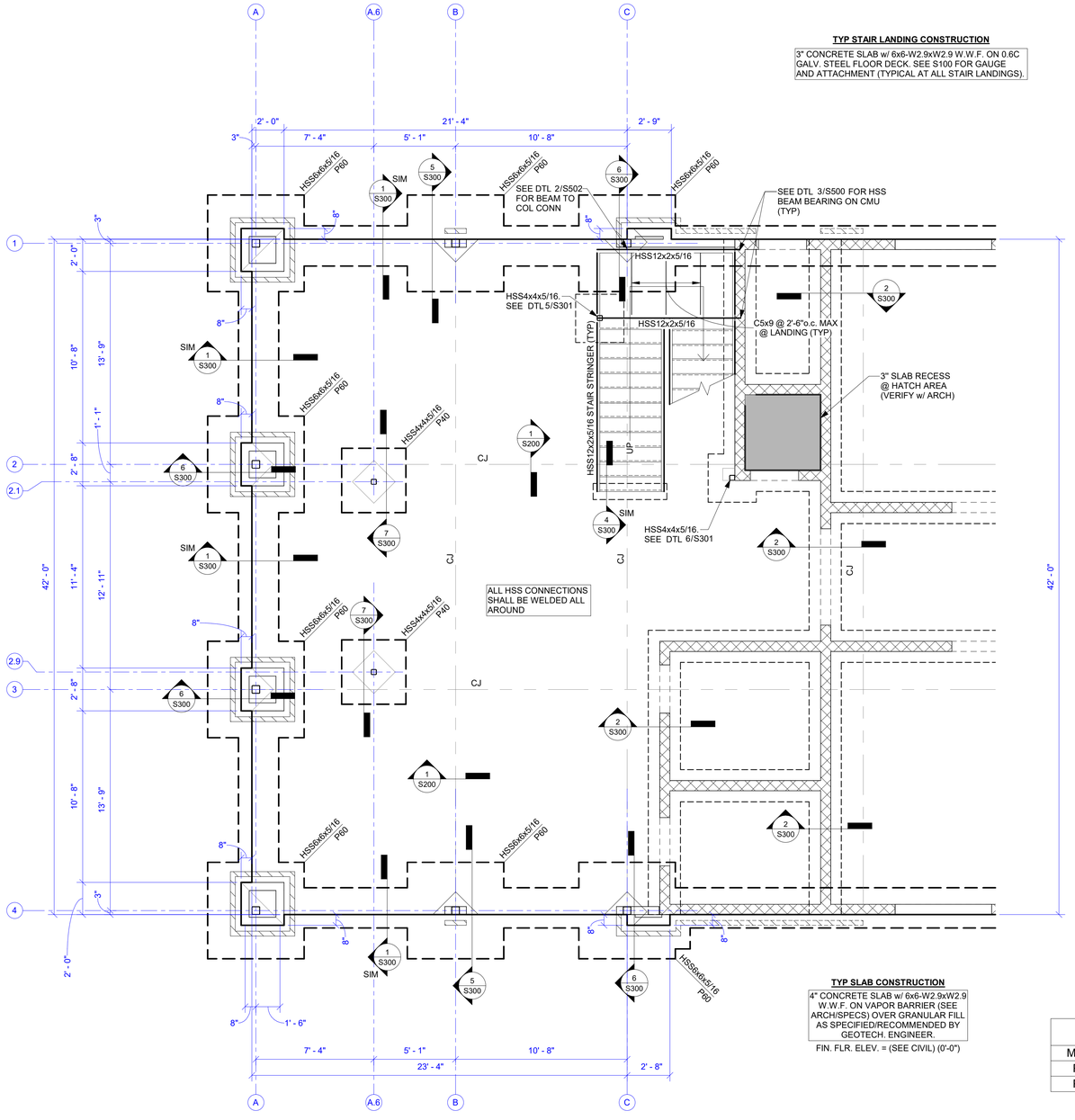

TYP STAIR LANDING CONSTRUCTION

3" CONCRETE SLAB w/ 6x6-W2.9xW2.9 W.W.F. ON 0.6C GALV. STEEL FLOOR DECK. SEE S100 FOR GAUGE AND ATTACHMENT (TYPICAL AT ALL STAIR LANDINGS).

TYP SLAB CONSTRUCTION

4" CONCRETE SLAB w/ 6x6-W2.9xW2.9 W.W.F. ON VAPOR BARRIER (SEE ARCH/SPECS) OVER GRANULAR FILL AS SPECIFIED/RECOMMENDED BY GEOTECH. ENGINEER.

FIN. FLR. ELEV. = (SEE CIVIL) (0'-0")

P1 FOUNDATION PLAN-LOBBY
1/4" = 1'-0"

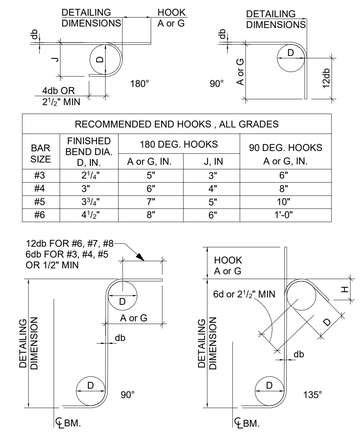

RECOMMENDED END HOOKS , ALL GRADES				
BAR SIZE	FINISHED BEND DIA. D, IN.	180 DEG. HOOKS		90 DEG. HOOKS
		A or G, IN.	J, IN	A or G, IN.
#3	2¼"	5"	3"	6"
#4	3"	6"	4"	8"
#5	3¾"	7"	5"	10"
#6	4½"	8"	6"	1'-0"

BAR SIZE	FINISHED BEND DIA. D, IN.	90° HOOKS	180° HOOKS		135° HOOKS	
		A or G, IN.	A or G, IN.	H. APPROX.	A or G, IN.	H. APPROX.
#3	1½"	4"	4"	2½"	4"	3"
#4	2"	4½"	4½"	3"	4½"	3"
#5	2½"	6"	5½"	3¾"	5½"	3¾"
#6	4½"	1'-0"	8"	4½"	8"	4½"

1 REBAR BEND DTL
NTS

PAD FOOTING SCHEDULE					
MARK	"W"	"L"	"t"	REINFORCING	REMARKS
P40	4'-0"	4'-0"	1'-4"	(5)#5 EA WAY	TOP & BOT
P60	6'-0"	6'-0"	1'-4"	(7)#6 EA WAY	TOP & BOT

STATE OF ARKANSAS REGISTERED PROFESSIONAL ENGINEER 8-23-24 No. 12374 CHAD FOWLER

FOWLER ENGINEERING, LLC No. 1759 ARKANSAS CERTIFICATE OF AUTHORITY

FOWLER ENGINEERING, LLC
STRUCTURAL ENGINEERING CONSULTANTS
1989 Oak Tree Cove, Suite A
HERNANDO, MS 38632
662.469.9571

LAW ENFORCEMENT TRAINING ACADEMY BARRACKS
BLACK RIVER TECHNICAL COLLEGE
Pocahontas, Arkansas

BRTC

BRACKETT KRENNERICH architects
100 East Huntington Ave, Suite D P.O. Box 1655
870-932-0571 Fax 870-932-0975
www.bkarchts.com

Revision Schedule			
Tag	Rev. Description	Rev. Date	Issued by

THIS IS A PRELIMINARY DRAWING NOT TO BE USED FOR ESTIMATING OR BIDDING PURPOSES. ARCHITECTS ASSUME NO LIABILITY WHATSOEVER FOR THE USE OF THIS DRAWING BY HEREIN NAMED OWNER, HIS AGENTS, OR ANY UNAUTHORIZED PERSON, FIRM, OR CORPORATION FOR CONSTRUCTION PURPOSES.

Commission Number 2405

S201

Date: August 23, 2024

FOUNDATION PLAN-LOBBY

\\FE-CLOUD\fedrawings\FE DRAWINGS (2024)\24-060 BLACK RIVER TECHNICAL COLLEGE LAW ENFORCEMENT TRAINING BARRACKS (R24)\BLACK RIVER TECH 9/5/2024 2:16:29 PM

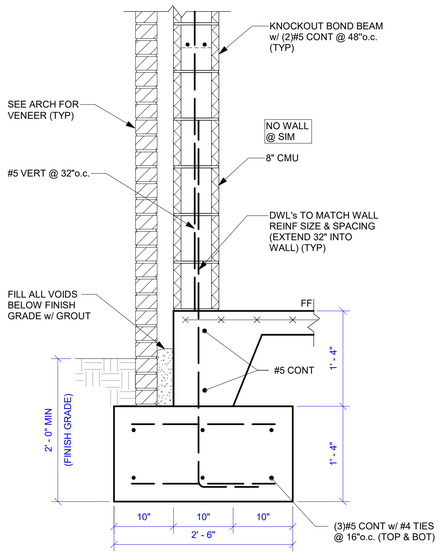

1 SECTION
1" = 1'-0"

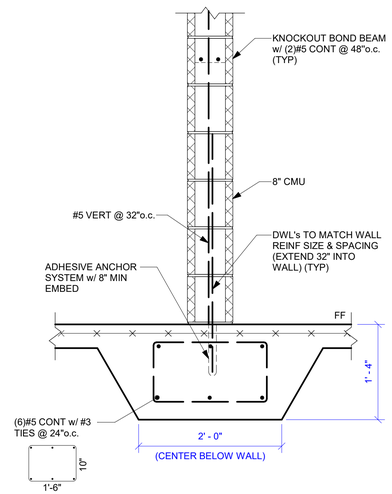

2 SECTION
1" = 1'-0"

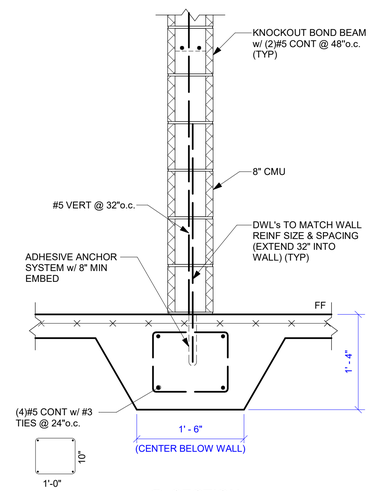

3 SECTION
1" = 1'-0"

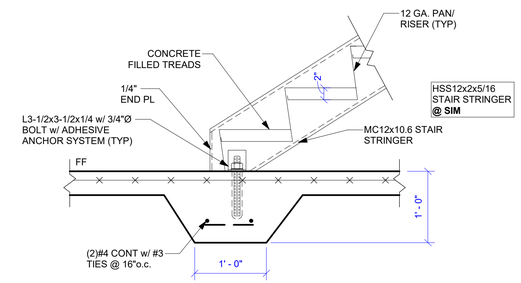

4 TYPICAL STAIR DETAIL
1" = 1'-0"

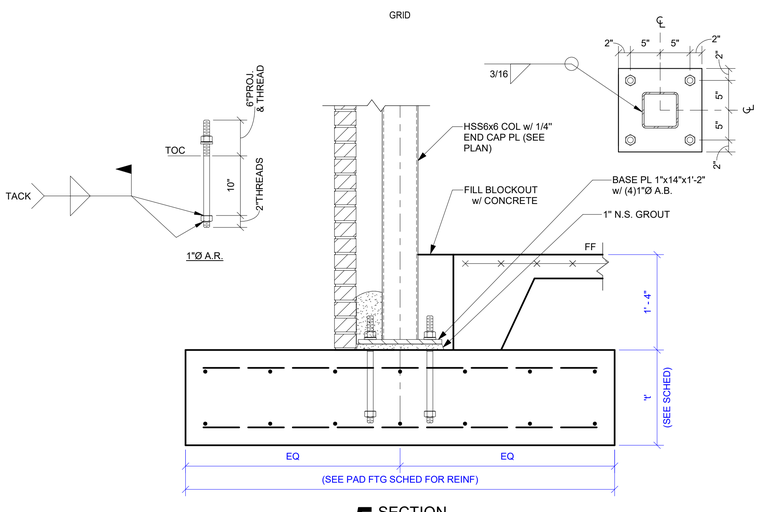

5 SECTION
1" = 1'-0"

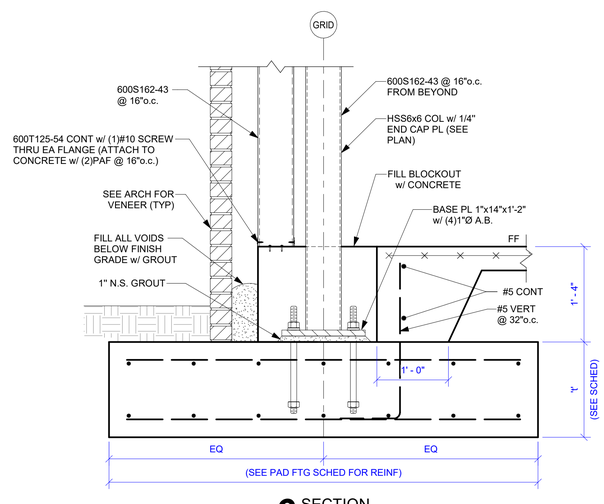

6 SECTION
1" = 1'-0"

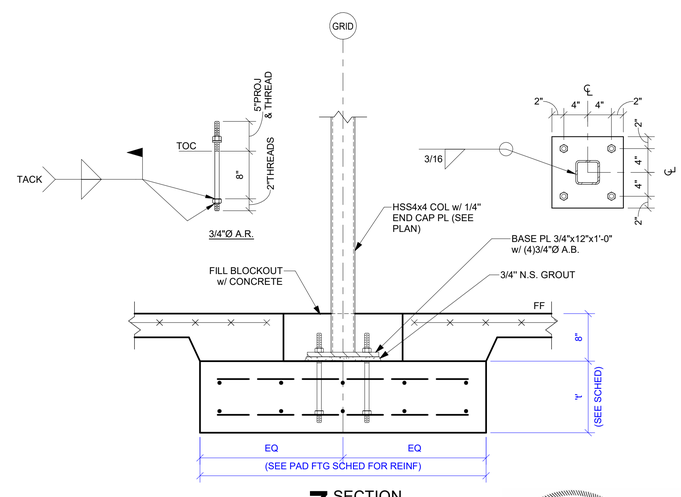

7 SECTION
1" = 1'-0"

BRACKETT KRENNERICH architects
100 East Huntington Ave. Suite D P.O. Box 1655
870-932-0571 Fax 870-932-0975
www.bkarchts.com

LAW ENFORCEMENT TRAINING ACADEMY BARRACKS
BLACK RIVER TECHNICAL COLLEGE
Pocahontas, Arkansas

Revision Schedule			
Tag	Rev. Description	Rev. Date	Issued by

STATE OF ARKANSAS
8-23-24
PROFESSIONAL ENGINEER
No. 12374
CHAD FOWLER

FOWLER ENGINEERING, LLC
No. 1759
CERTIFICATE OF AUTHORITY
ARKANSAS ENGINEER

FOWLER ENGINEERING, LLC
STRUCTURAL ENGINEERING CONSULTANTS
1989 Oak Tree Cove, Suite A
HERNANDO, MS 38632
662.469.9571

Commission Number
2405

S300

Date: August 23, 2024

FOUNDATION DETAILS

\\TE-CLOUD\fedrawings\TE DRAWINGS (2024)\24-060 BLACK RIVER TECHNICAL COLLEGE LAW ENFORCEMENT TRAINING BARRACKS (R24)\BLACK RIVER TECH
9/5/2024 2:16:29 PM
S300-24_FOUNDATION DETAILS.rvt

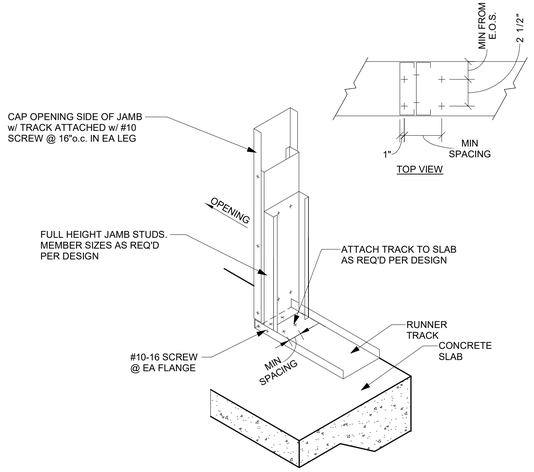

1 JAMB ANCHORAGE - OPENING
NTS

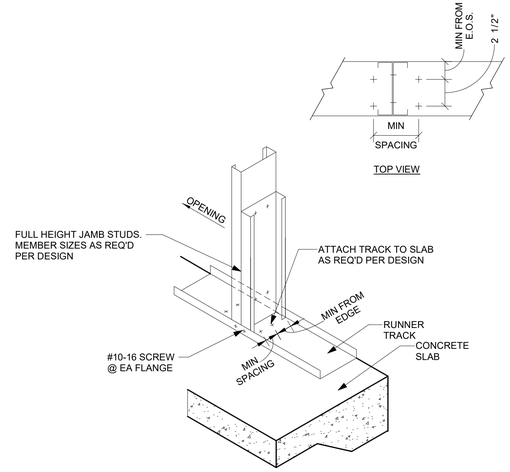

2 JAMB ANCHORAGE - WINDOW
NTS

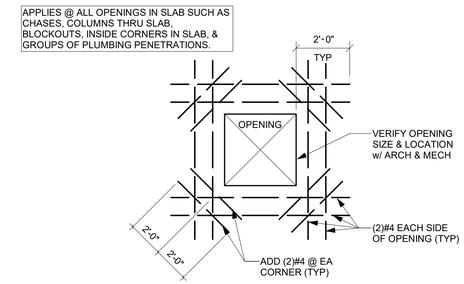

3 REINF AT OPENING IN SLAB
NTS

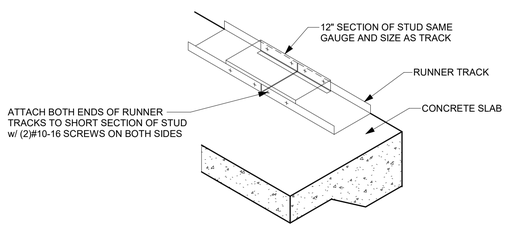

4 TYP TRACK LAP
NTS

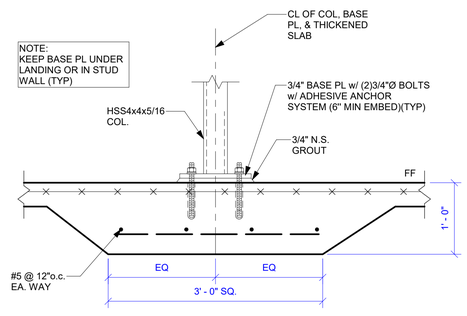

5 SECTION
1" = 1'-0"

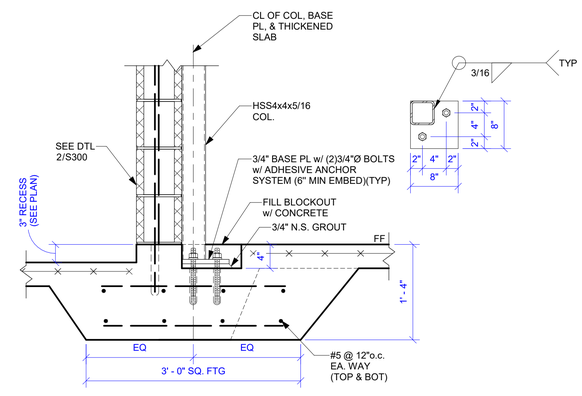

6 SECTION
1" = 1'-0"

LAW ENFORCEMENT TRAINING ACADEMY BARRACKS

BLACK RIVER TECHNICAL COLLEGE

Pocahontas, Arkansas

BRACKETT KRENNERICH architects

100 East Huntington Ave. Suite D P.O. Box 1655 870-932-0571 Fax 870-932-0975 www.bkarchts.com

Revision Schedule

Tag	Rev. Description	Rev. Date	Issued by

STATE OF ARKANSAS
PROFESSIONAL ENGINEER
8-23-24
No. 12374
CHAD FOWLER

FOWLER ENGINEERING, LLC
No. 1759
CERTIFICATE OF AUTHORITY
ARKANSAS ENGINEER

THIS IS A PRELIMINARY DRAWING NOT TO BE USED FOR ESTIMATING OR BIDDING PURPOSES. ARCHITECTS ASSUME NO LIABILITY WHATSOEVER FOR THE USE OF THIS DRAWING BY HEREIN NAMED OWNER, HIS AGENTS, OR ANY UNAUTHORIZED PERSON, FIRM, OR CORPORATION FOR CONSTRUCTION PURPOSES.

FOWLER ENGINEERING, LLC
STRUCTURAL ENGINEERING CONSULTANTS
1989 Oak Tree Cove, Suite A
HERNANDO, MS 38632
662.469.9571

Commission Number 2405

S301

Date: August 23, 2024

FOUNDATION DETAILS

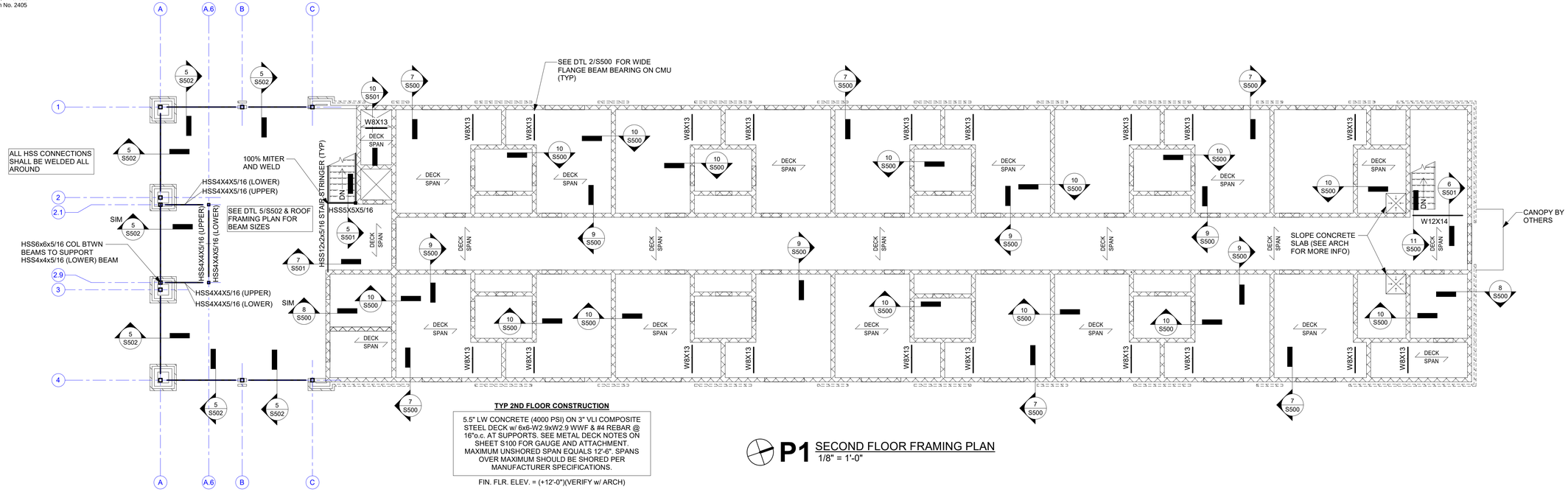

TYP 2ND FLOOR CONSTRUCTION

5.5" LW CONCRETE (4000 PSI) ON 3" VLI COMPOSITE STEEL DECK w/ 6x6-W2.9xW2.9 WWF & #4 REBAR @ 16"o.c. AT SUPPORTS. SEE METAL DECK NOTES ON SHEET S100 FOR GAUGE AND ATTACHMENT. MAXIMUM UNSHORED SPAN EQUALS 12'-6". SPANS OVER MAXIMUM SHOULD BE SHORED PER MANUFACTURER SPECIFICATIONS.

FIN. FLR. ELEV. = (+12'-0")(VERIFY w/ ARCH)

P1 SECOND FLOOR FRAMING PLAN
1/8" = 1'-0"

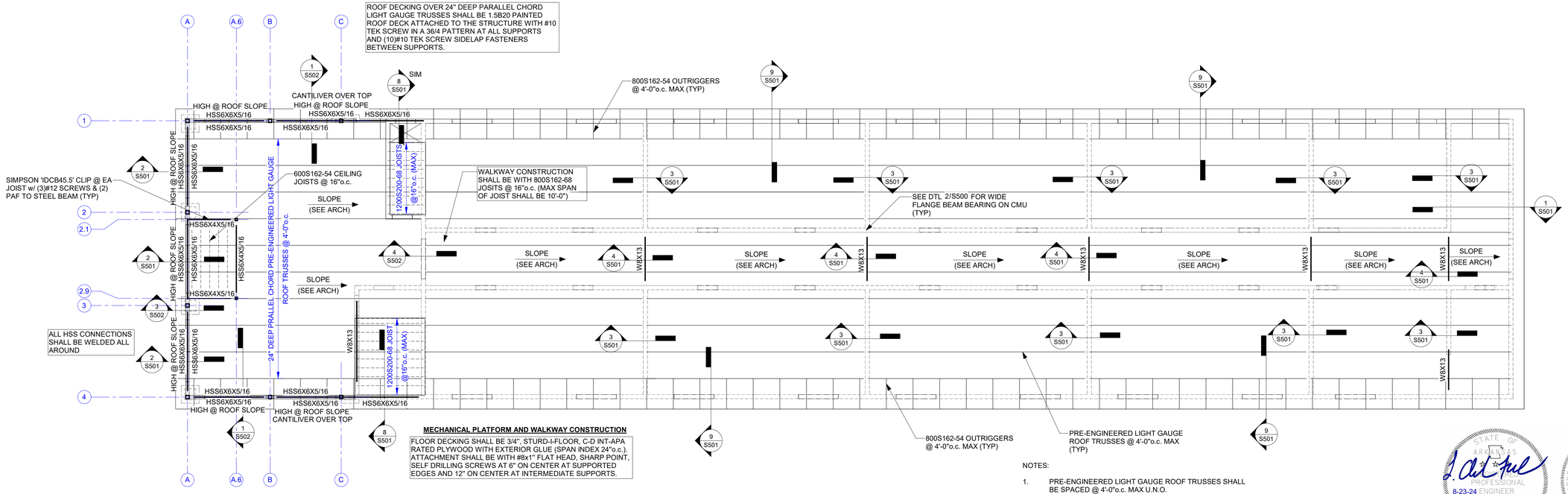

MECHANICAL PLATFORM AND WALKWAY CONSTRUCTION

FLOOR DECKING SHALL BE 3/4", STURD-I-FLOOR, C-D INT-APA RATED PLYWOOD WITH EXTERIOR GLUE (SPAN INDEX 24"o.c.). ATTACHMENT SHALL BE WITH #8x1" FLAT HEAD, SHARP POINT, SELF DRILLING SCREWS AT 6" ON CENTER AT SUPPORTED EDGES AND 12" ON CENTER AT INTERMEDIATE SUPPORTS.

P2 ROOF FRAMING PLAN
1/8" = 1'-0"

NOTES:

1. PRE-ENGINEERED LIGHT GAUGE ROOF TRUSSES SHALL BE SPACED @ 4'-0"o.c. MAX U.N.O.
2. PRE-ENGINEERED LIGHT GAUGE ROOF TRUSSES SHALL BE SUPPORTED ONLY AT LOCATIONS SHOWN.
3. SEE SHEET S100 FOR ROOF DECK & ATTACHMENT
4. TBE = (SEE ARCH)
5. THE TOP OF ALL NON-LOAD BEARING WALLS SHALL BE 1/4" BELOW TRUSS BOT. CHORD TO ALLOW FOR TRUSS DEFL.

STATE OF ARKANSAS PROFESSIONAL ENGINEER 8-23-24 No. 12374 LOAD FOWLER

FOWLER ENGINEERING, LLC CERTIFICATE OF AUTHORIZATION No. 1759 ARKANSAS ENGINEER

FOWLER ENGINEERING, LLC
STRUCTURAL ENGINEERING CONSULTANTS
1989 Oak Tree Cove, Suite A
HERNANDO, MS 38632
662.469.9571

LAW ENFORCEMENT TRAINING ACADEMY BARRACKS

BLACK RIVER TECHNICAL COLLEGE
Pocahontas, Arkansas

BRTC

BRACKETT KRENNERICH architects
100 East Huntington Ave. Suite D P.O. Box 1655
870-932-0571 Fax 870-932-0975
www.bkarchts.com

Revision Schedule			
Tag	Rev. Description	Rev. Date	Issued by

THIS IS A PRELIMINARY DRAWING NOT TO BE USED FOR ESTIMATING OR BIDDING PURPOSES. ARCHITECTS ASSUME NO LIABILITY WHATSOEVER FOR THE USE OF THIS DRAWING BY HEREIN NAMED OWNER, HIS AGENTS, OR ANY UNAUTHORIZED PERSON, FIRM, OR CORPORATION FOR CONSTRUCTION PURPOSES.

Commission Number 2405

S400

Date: August 23, 2024

SECOND FLOOR & ROOF FRAMING PLAN

\\TE-CLOUD\fedrawings\TE DRAWINGS (2024)\24-060 BLACK RIVER TECHNICAL COLLEGE LAW ENFORCEMENT TRAINING BARRACKS (R24)\BLACK RIVER TECH 9/5/2024 2:16:30 PM

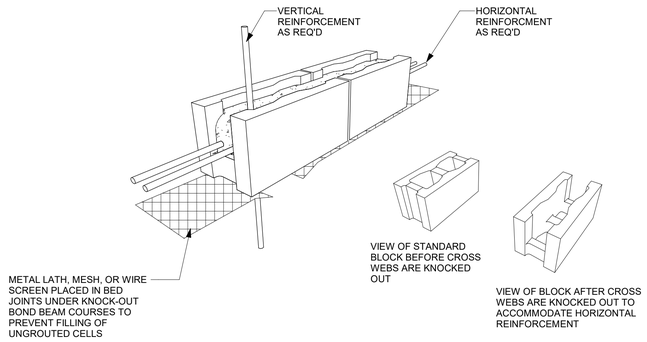

1 TYPICAL KNOCKOUT BOND BEAM
NTS

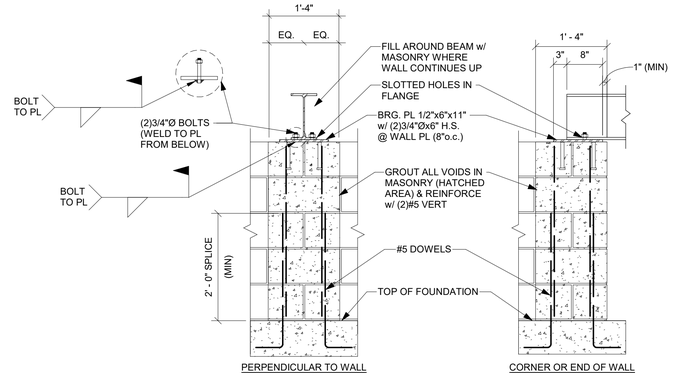

2 WIDE FLANGE BEARING ON CMU
NTS

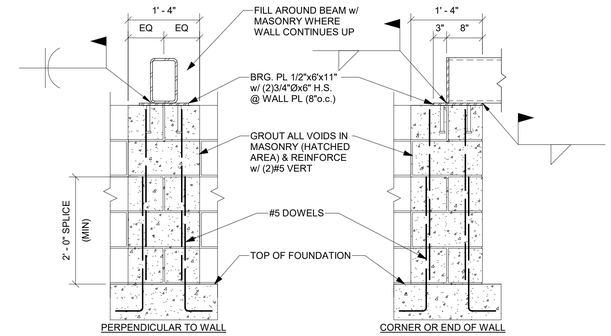

3 HSS BEARING ON CMU
NTS

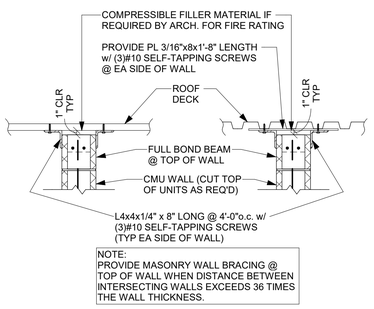

4 WALL BRACING OF NON-BRNG. WALLS
NTS

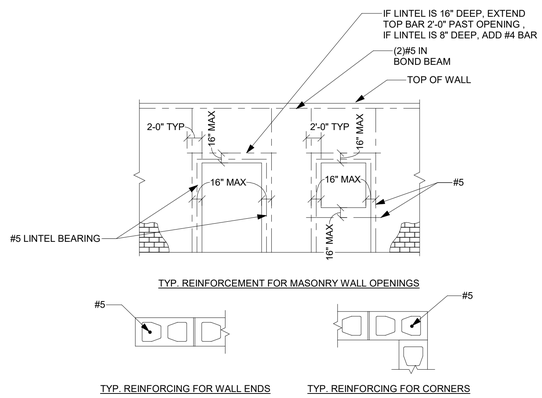

5 REINF. FOR WALL OPENINGS
NTS

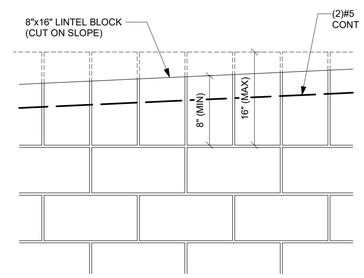

6 SLOPING BOND BEAM
NTS

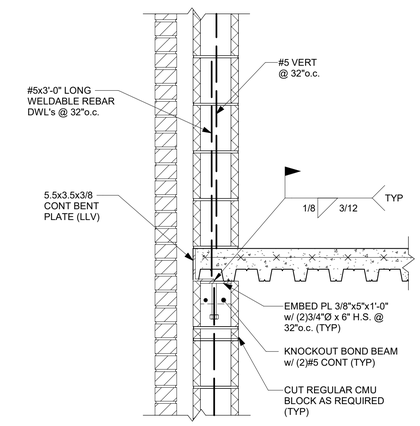

7 SECTION
1" = 1'-0"

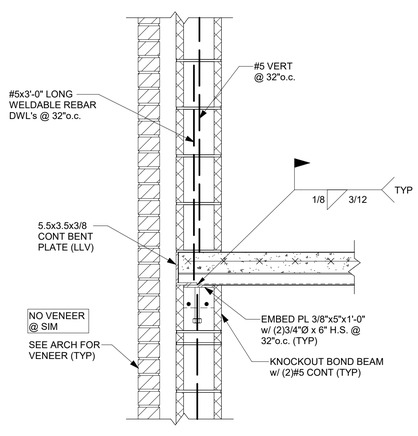

8 SECTION
1" = 1'-0"

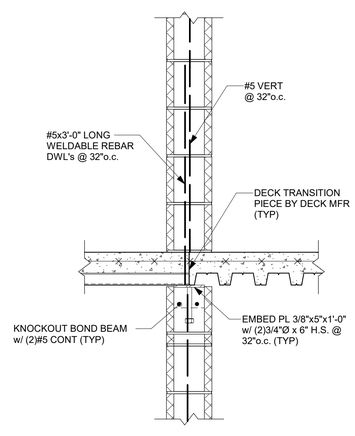

9 SECTION
1" = 1'-0"

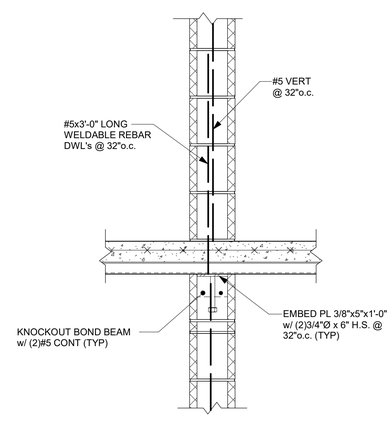

10 SECTION
1" = 1'-0"

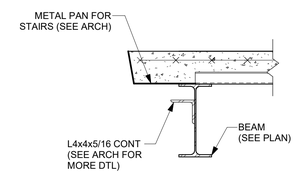

11 SECTION
1" = 1'-0"

LAW ENFORCEMENT TRAINING ACADEMY BARRACKS
BLACK RIVER TECHNICAL COLLEGE
Pocahontas, Arkansas

BRACKETT KRENNERICH architects
100 East Huntington Ave. Suite D P.O. Box 1655 | 870-932-0571 | Fax 870-932-0975 | www.bkarchts.com

Revision Schedule			
Tag	Rev. Description	Rev. Date	Issued by

STATE OF ARKANSAS PROFESSIONAL ENGINEER No. 12374 CHAD FOWLER 8-23-24

FOWLER ENGINEERING, LLC No. 1759 CERTIFICATE OF AUTHORIZATION ARKANSAS ENGINEER

THIS IS A PRELIMINARY DRAWING NOT TO BE USED FOR ESTIMATING OR BIDDING PURPOSES. ARCHITECTS ASSUME NO LIABILITY WHATSOEVER FOR THE USE OF THIS DRAWING BY HEREIN NAMED OWNER, HIS AGENTS, OR ANY UNAUTHORIZED PERSON, FIRM, OR CORPORATION FOR CONSTRUCTION PURPOSES.

FOWLER ENGINEERING, LLC
STRUCTURAL ENGINEERING CONSULTANTS
1989 Oak Tree Cove, Suite A
HERNANDO, MS 38632
662.469.9571

Commission Number 2405

S500

Date: August 23, 2024

FRAMING DETAILS

\\FE-CLOUD\fedrawings\FE DRAWINGS (2024)\24-060 BLACK RIVER TECHNICAL COLLEGE LAW ENFORCEMENT TRAINING BARRACKS (R24)\BLACK RIVER TECH 2024_23_LAW_ENFORCEMENT_TRAINING_BARRACKS_central.rvt
9/5/2024 2:16:31 PM

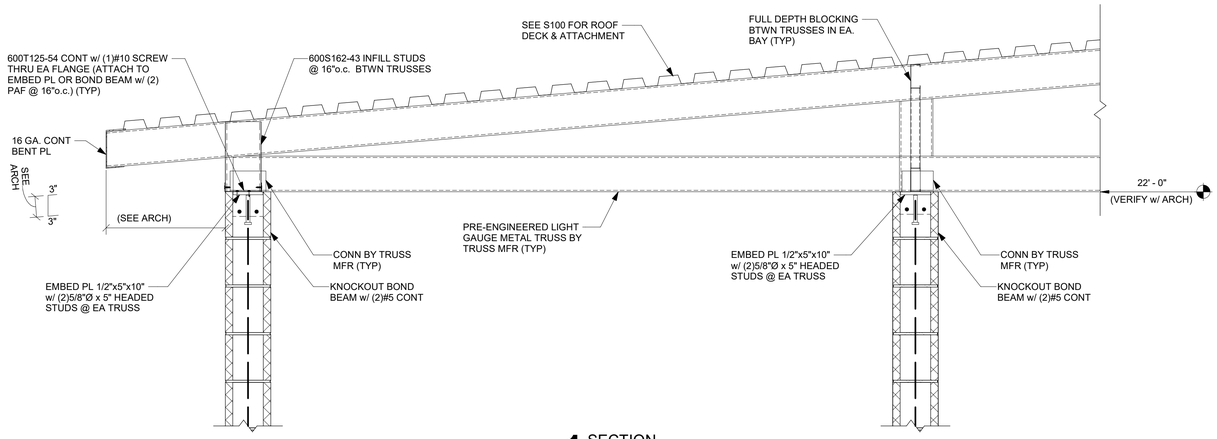

1 SECTION
1" = 1'-0"

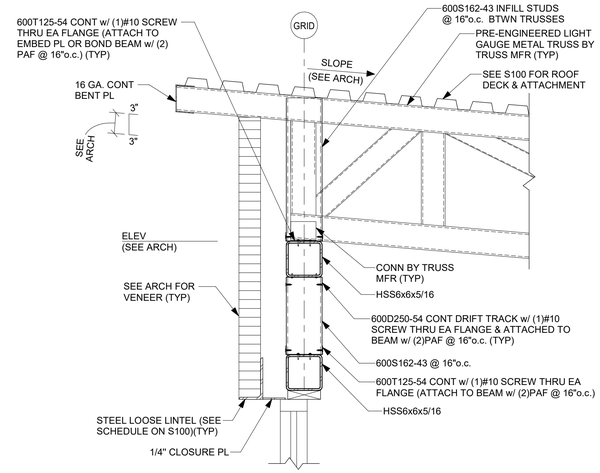

2 SECTION
1" = 1'-0"

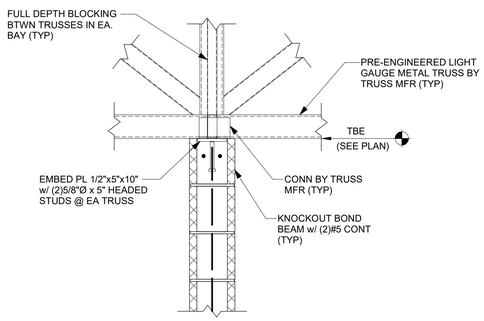

3 SECTION
1" = 1'-0"

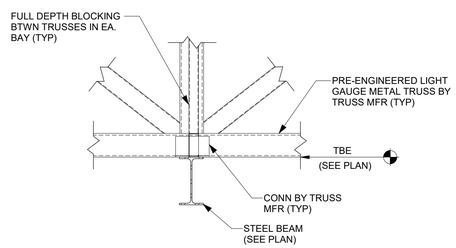

4 SECTION
1" = 1'-0"

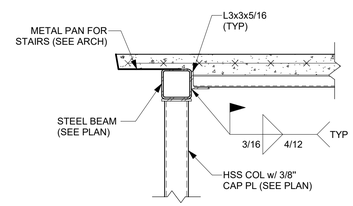

5 SECTION
1" = 1'-0"

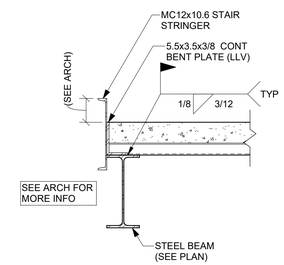

6 SECTION
1" = 1'-0"

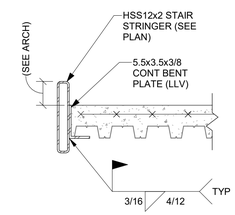

7 SECTION
1" = 1'-0"

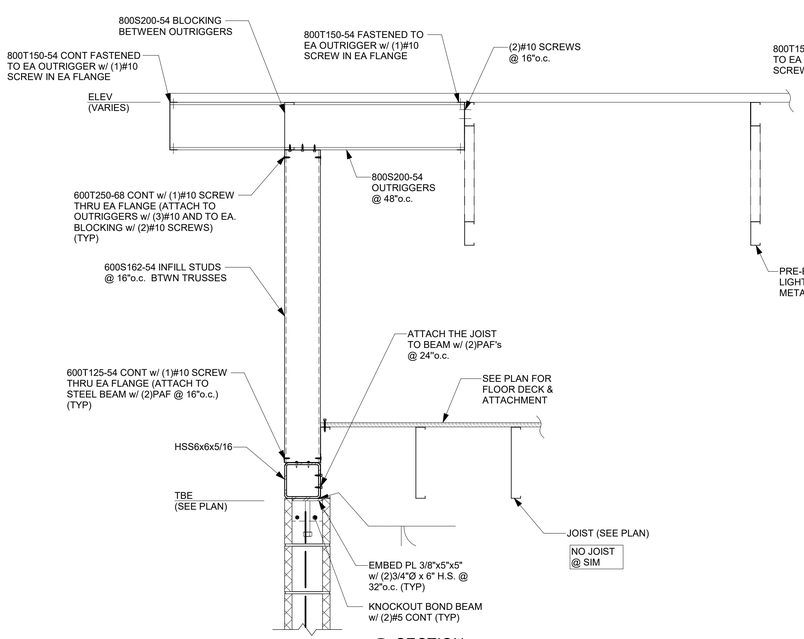

8 SECTION
1" = 1'-0"

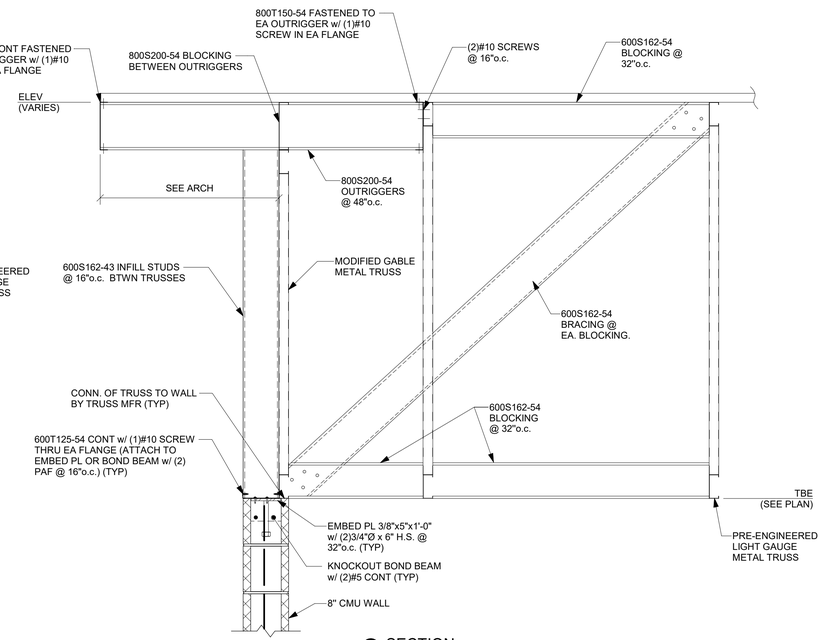

9 SECTION
1" = 1'-0"

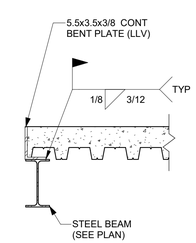

10 SECTION
1" = 1'-0"

LAW ENFORCEMENT TRAINING ACADEMY BARRACKS
BLACK RIVER TECHNICAL COLLEGE
Pocahontas, Arkansas

BRTC

BRACKETT KRENNERICH architects

100 East Huntington Ave. Suite D P.O. Box 1655 870-932-0571 Fax 870-932-0975 www.bkarchts.com

Revision Schedule			
Tag	Rev. Description	Rev. Date	Issued by

STATE OF ARKANSAS REGISTERED PROFESSIONAL ENGINEER 8-23-24 No. 12374 CHAD FOWLER

CERTIFICATE OF AUTHORITY FOWLER ENGINEERING, LLC No. 1759 ARKANSAS ENGINEER

FOWLER ENGINEERING, LLC
STRUCTURAL ENGINEERING CONSULTANTS
1989 Oak Tree Cove, Suite A
HERNANDO, MS 38632
662.469.9571

THIS IS A PRELIMINARY DRAWING NOT TO BE USED FOR ESTIMATING OR BIDDING PURPOSES. ARCHITECTS ASSUME NO LIABILITY WHATSOEVER FOR THE USE OF THIS DRAWING BY HEREIN NAMED OWNER, HIS AGENTS, OR ANY UNAUTHORIZED PERSON, FIRM, OR CORPORATION FOR CONSTRUCTION PURPOSES.

Commission Number
2405

S501

Date: August 23, 2024

FRAMING DETAILS

\\TE-CLOUD\edrawings\TE DRAWINGS (2024)\24-060 BLACK RIVER TECHNICAL COLLEGE - LAW ENFORCEMENT TRAINING BARRACKS (R24)\BLACK RIVER TECH
9/5/2024 2:16:33 PM
S501-FRAMING DETAILS.rvt

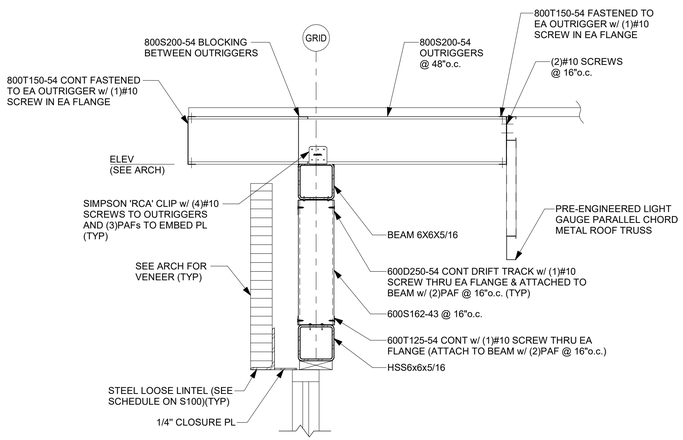

1 SECTION
1" = 1'-0"

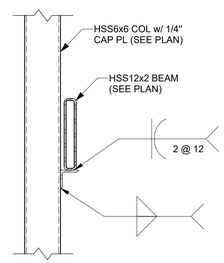

2 SECTION
1" = 1'-0"

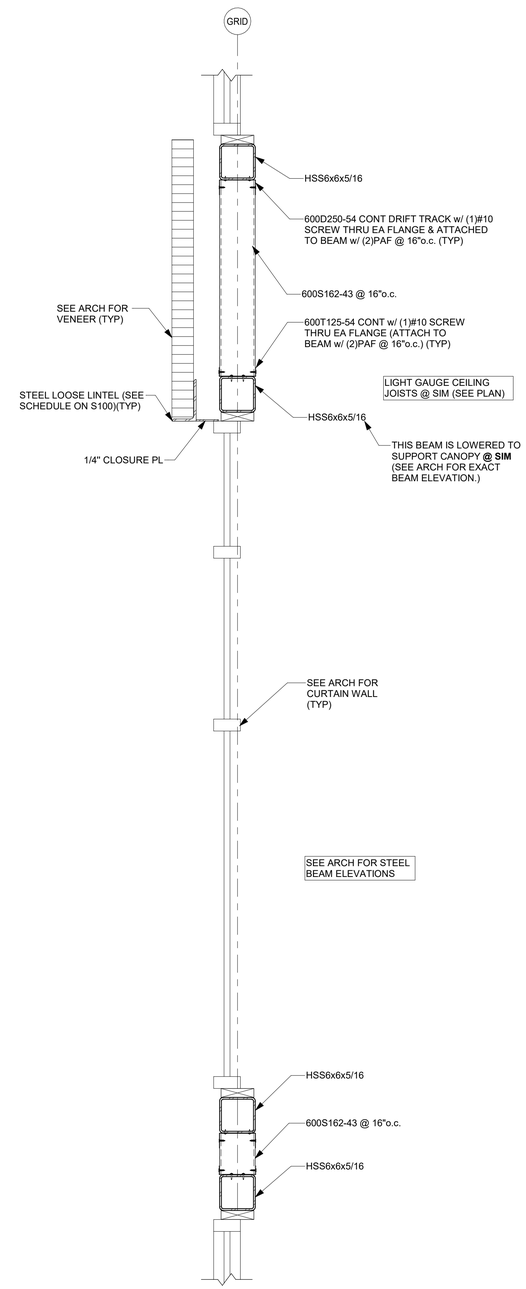

5 SECTION
1" = 1'-0"

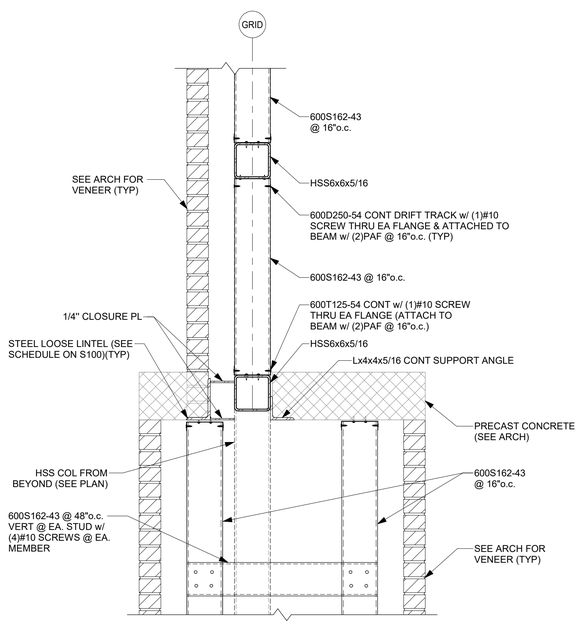

3 SECTION
1" = 1'-0"

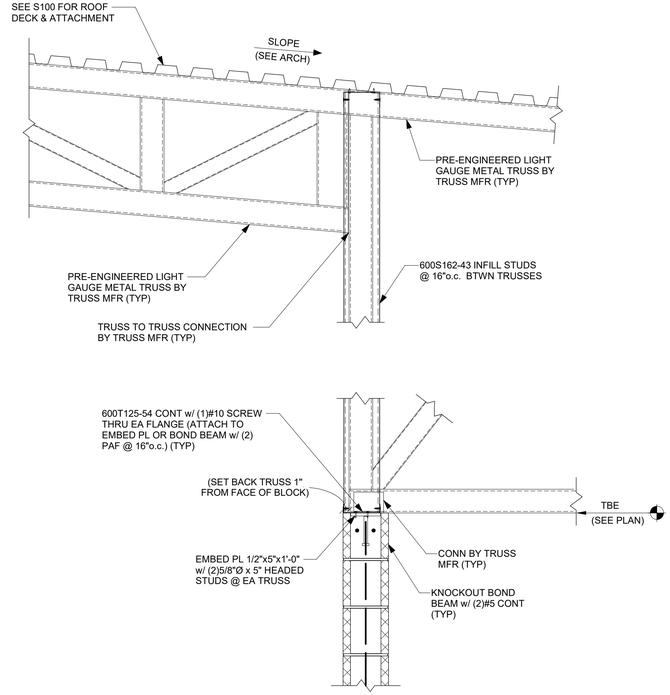

4 SECTION
1" = 1'-0"

BRTC

LAW ENFORCEMENT TRAINING ACADEMY BARRACKS

BLACK RIVER TECHNICAL COLLEGE

Pocahontas, Arkansas

BRACKETT KRENNERICH architects

100 East Huntington Ave. Suite D P.O. Box 1655 870-932-0571 Fax 870-932-0975 www.bkarchts.com

STATE OF ARKANSAS
PROFESSIONAL ENGINEER
8-23-24
No. 12374
LOAD FOWLER

CERTIFICATE OF AUTHORIZATION
FOWLER ENGINEERING, LLC
No. 1759
ARKANSAS ENGINEER

FOWLER ENGINEERING, LLC
STRUCTURAL ENGINEERING CONSULTANTS
1989 Oak Tree Cove, Suite A
HERNANDO, MS 38632
662.469.9571

Revision Schedule			
Tag	Rev. Description	Rev. Date	Issued by

THIS IS A PRELIMINARY DRAWING NOT TO BE USED FOR ESTIMATING OR BIDDING PURPOSES. ARCHITECTS ASSUME NO LIABILITY WHATSOEVER FOR THE USE OF THIS DRAWING BY HEREIN NAMED OWNER, HIS AGENTS, OR ANY UNAUTHORIZED PERSON, FIRM, OR CORPORATION FOR CONSTRUCTION PURPOSES.

Commission Number
2405

S502

Date: August 23, 2024

FRAMING DETAILS

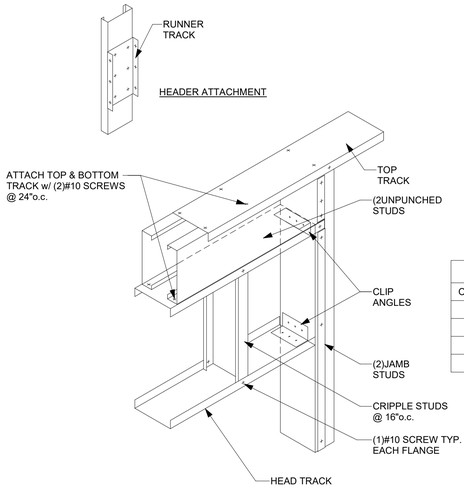

HEADER SCHEDULE

OPENING WIDTH	HEADER SIZE
UP TO 4'-0"	(2)600S162-43 BOXED HEADER
4'-0" TO 6'-0"	(2)800S162-54 BOXED HEADER
6'-0" TO 8'-0"	(2)800S200-68 BOXED HEADER
8'-0" TO 11'-0"	(2)1000S162-68 BOXED HEADER

1 METAL STUD HEADER @ LOAD BEARING WALL
NTS

MAXIMUM HOLE SIZE		
STUD DEPTH (IN.)	HOLE DEPTH (IN.)	HOLE LENGTH (IN.)
2-1/2"	1-1/4"	2-1/2"
3-5/8"	1-7/8"	3-5/8"
4"	2"	4"
6"	3"	6"
8"	4"	8"
10"	5"	10"
12"	6"	10"

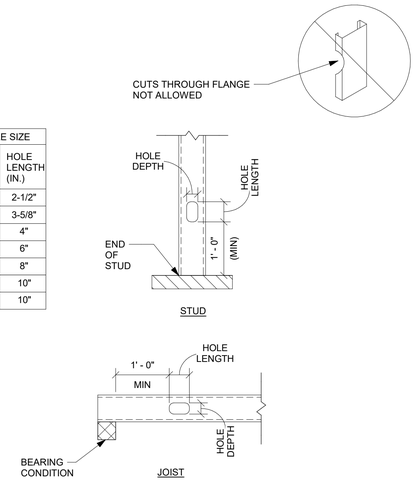

2 FIELD CUT HOLE DETAIL
NTS

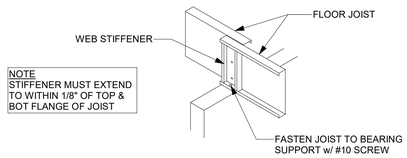

3 LIGHT GAGE JOIST WEB STIFFENER DETAIL
NTS

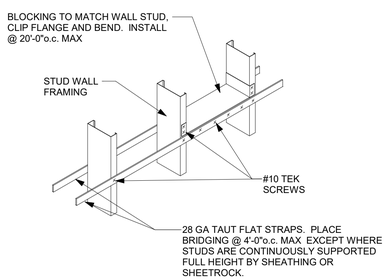

4 STUD WALL BRIDGING DETAIL
NTS

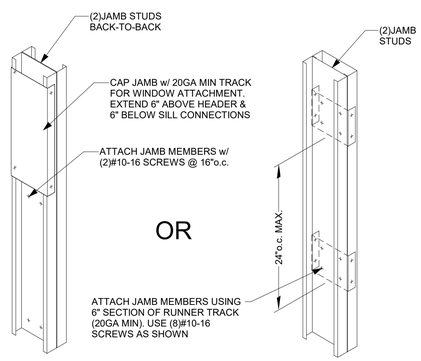

5 TRACK OVERLAP
NTS

SIMPSON MODEL NO.	STUD DEPTH (IN.)	STUD THICKNESS MIL (GA.)
SUBH3.25	3-5/8"	33(20)
		43(18)
MSUBH3.25	3-5/8"	54(16)
		68(14)
		97(12)
SUBH3.25	6"	33(20)
		43(18)
MSUBH3.25	6"	54(16)
		68(14)
		97(12)
SUBH3.25	8"	43(18)
MSUBH3.25	8"	54(16)
		68(14)
		97(12)

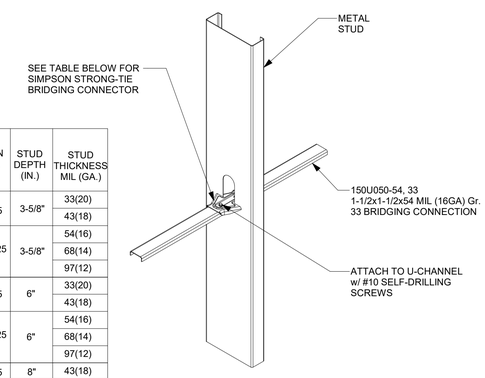

6 TYPICAL WEB BRIDGING DETAIL
NTS

LAW ENFORCEMENT TRAINING ACADEMY BARRACKS
BLACK RIVER TECHNICAL COLLEGE
Pocahontas, Arkansas

BRTC

BRACKETT KRENNERICH architects

100 East Huntington Ave. Suite D P.O. Box 1655 870-932-0571 Fax 870-932-0975 www.bkarchts.com

Revision Schedule				
Tag	Rev. Description	Rev. Date	issued by	

STATE OF ARKANSAS
LEONARD FOWLER
PROFESSIONAL ENGINEER
8-23-24
No. 12374

CERTIFICATE OF AUTHORIZATION
FOWLER ENGINEERING, LLC
No. 1759
ARKANSAS ENGINEER

FOWLER ENGINEERING, LLC
STRUCTURAL ENGINEERING CONSULTANTS
1989 Oak Tree Cove, Suite A
HERNANDO, MS 38632
662.469.9571

THIS IS A PRELIMINARY DRAWING NOT TO BE USED FOR ESTIMATING OR BIDDING PURPOSES. ARCHITECTS ASSUME NO LIABILITY WHATSOEVER FOR THE USE OF THIS DRAWING BY HEREIN NAMED OWNER, HIS AGENTS, OR ANY UNAUTHORIZED PERSON, FIRM, OR CORPORATION FOR CONSTRUCTION PURPOSES.

Commission Number 2405

S503

Date: August 23, 2024

FRAMING DETAILS